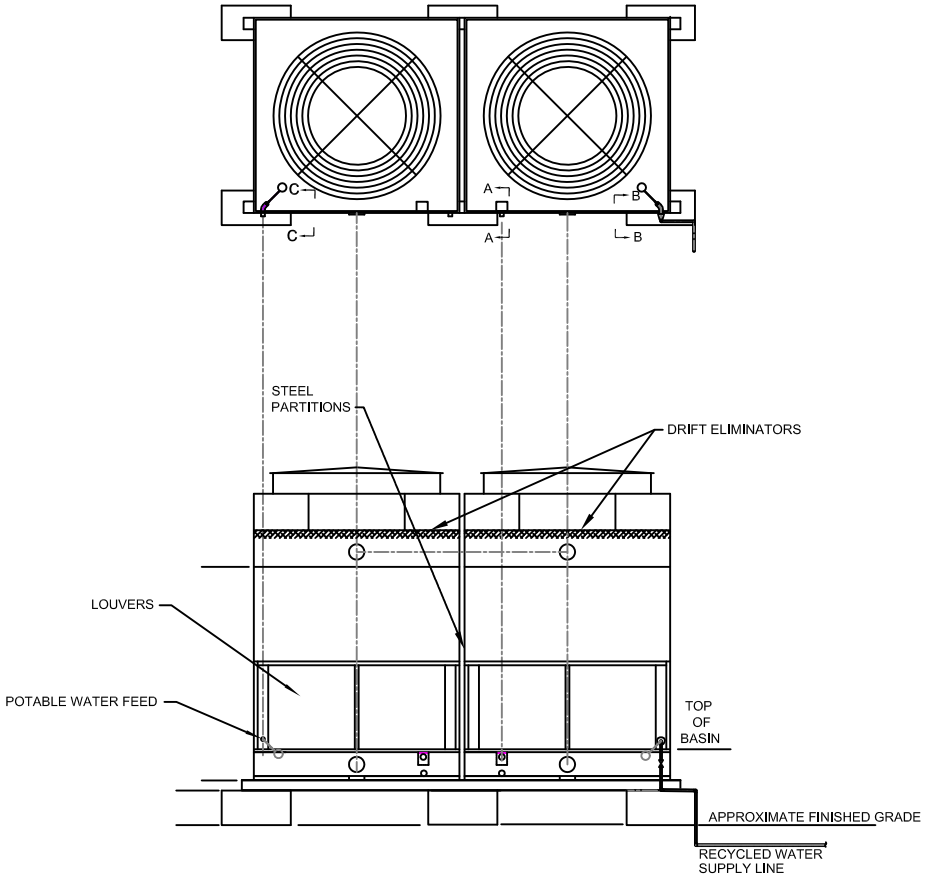

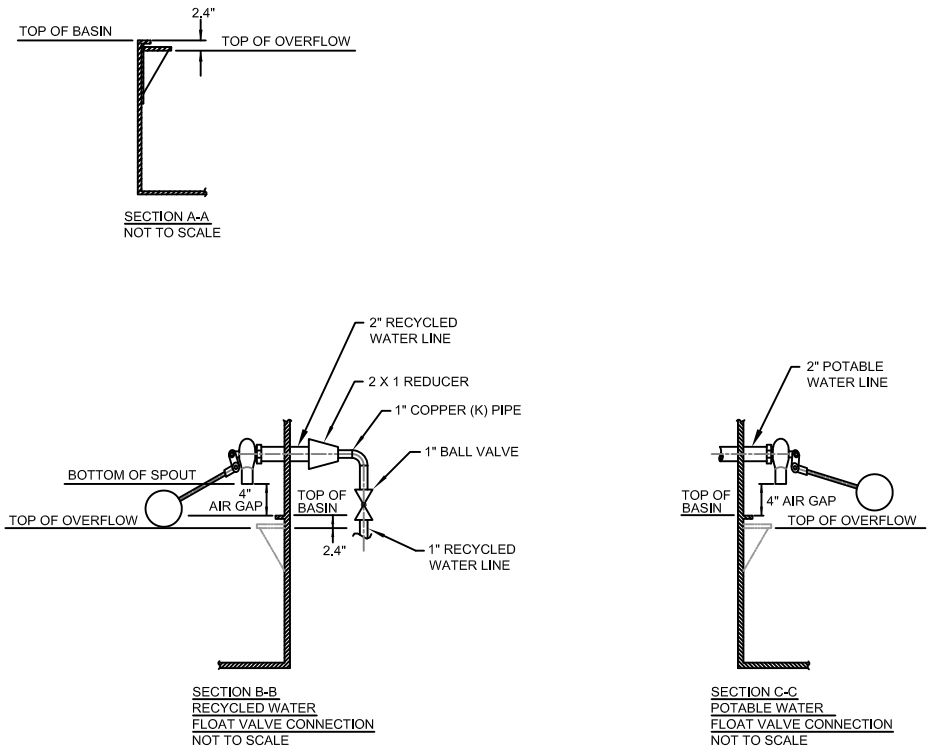

DIAGRAMMATIC REPRESENTATION OF MAKE-UP CONNECTIONS

EXAMPLE OF RECYCLED WATER AND POTABLE WATER AIR-GAPPED MAKE-UP CONNECTIONS TO A TWO-CELL COOLING TOWER	DIAGRAMMATIC CUT SHEET