CITY OF SAN JOSE, DEPARTMENT OF PUBLIC WORKS, ENGINEERING SERVICES, UTILITES SECTION

CURB & GUTTER REPLACEMENT

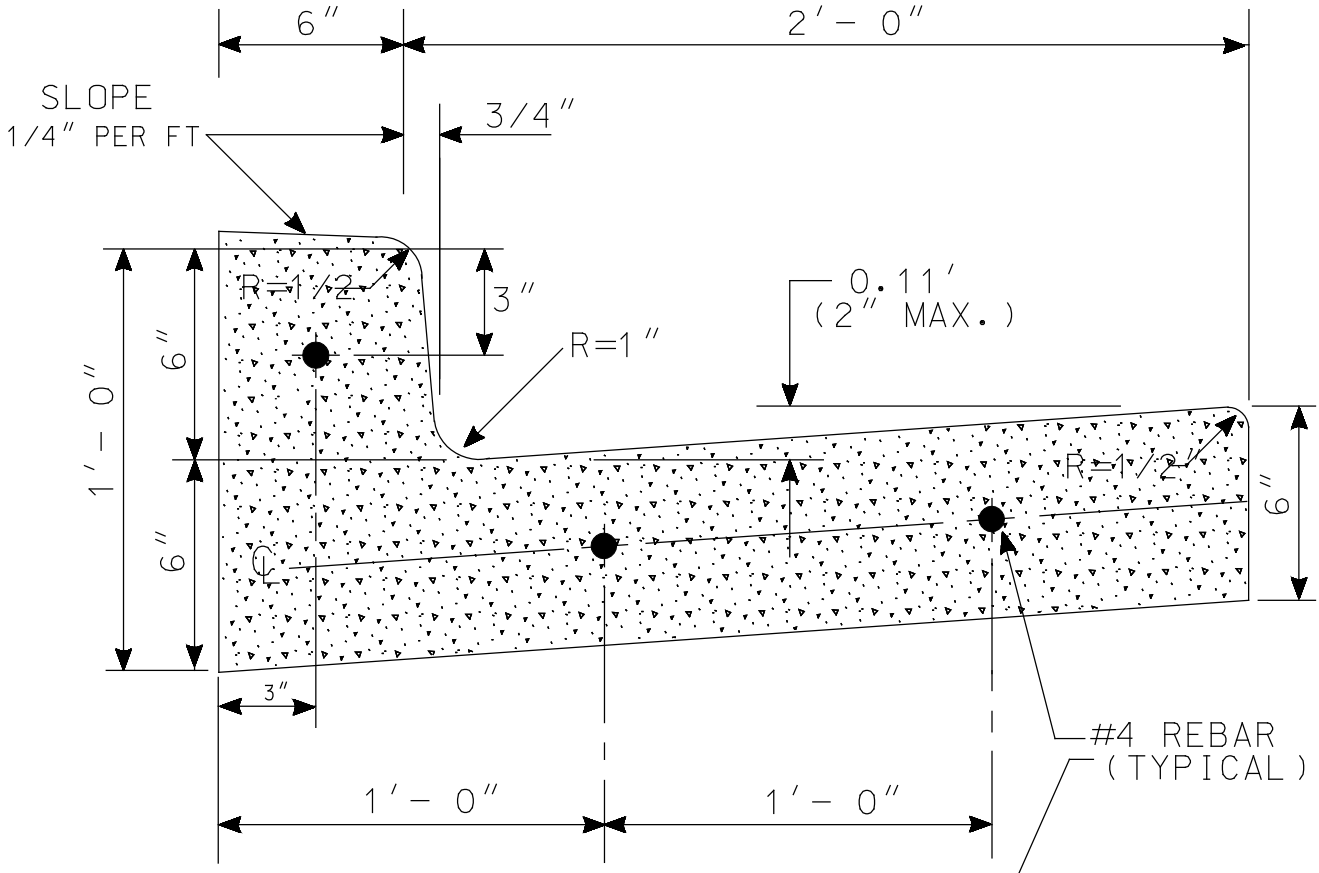

SECTION

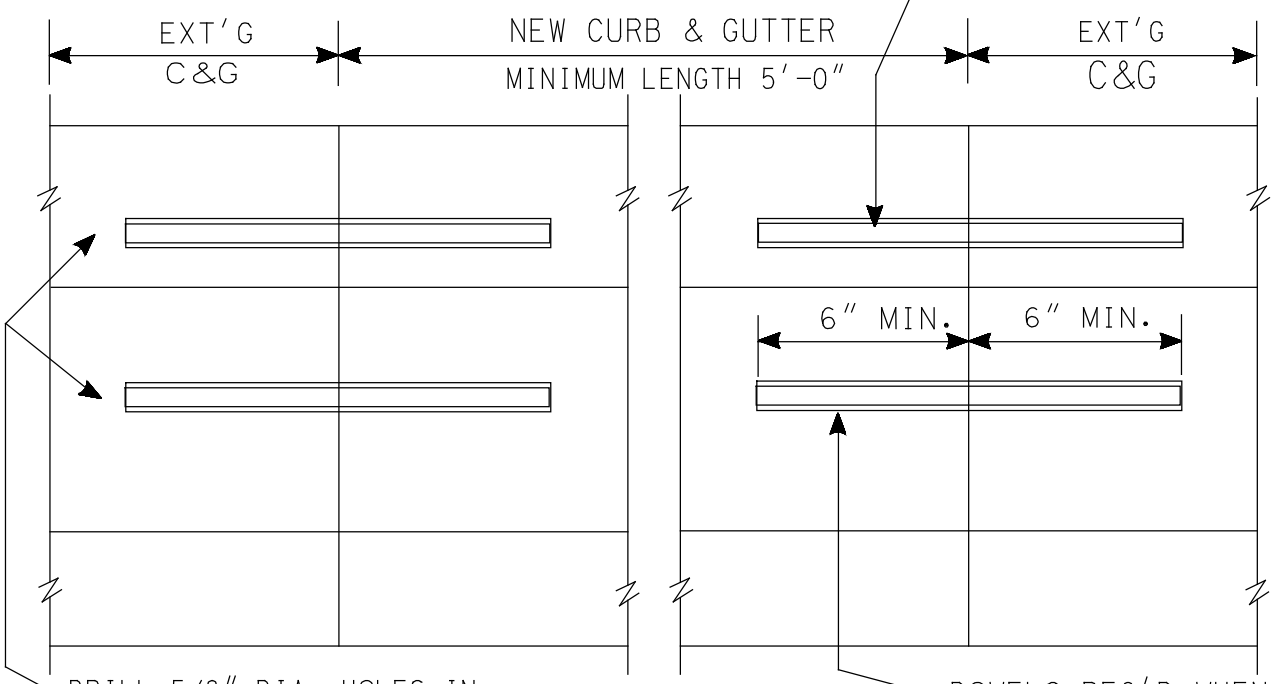

ELEVATION