	200 PSI TEST	250 PSI TEST
A	2'-6"	3'-0"
B	5'-0"	6'-0"

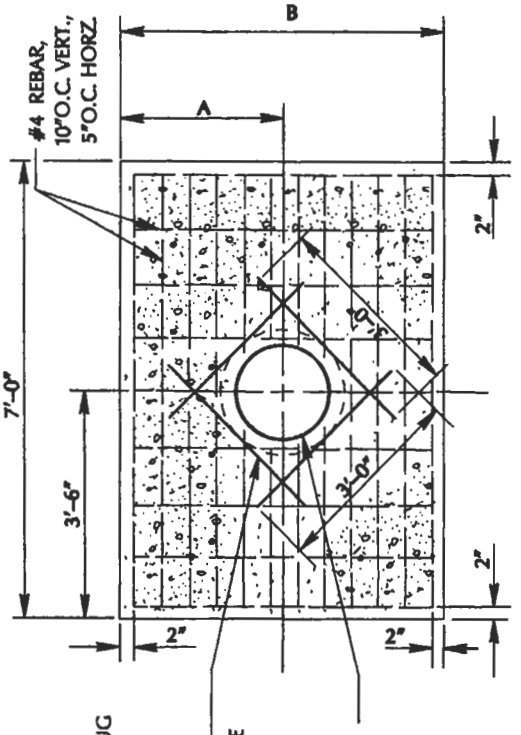

FRONT VIEW

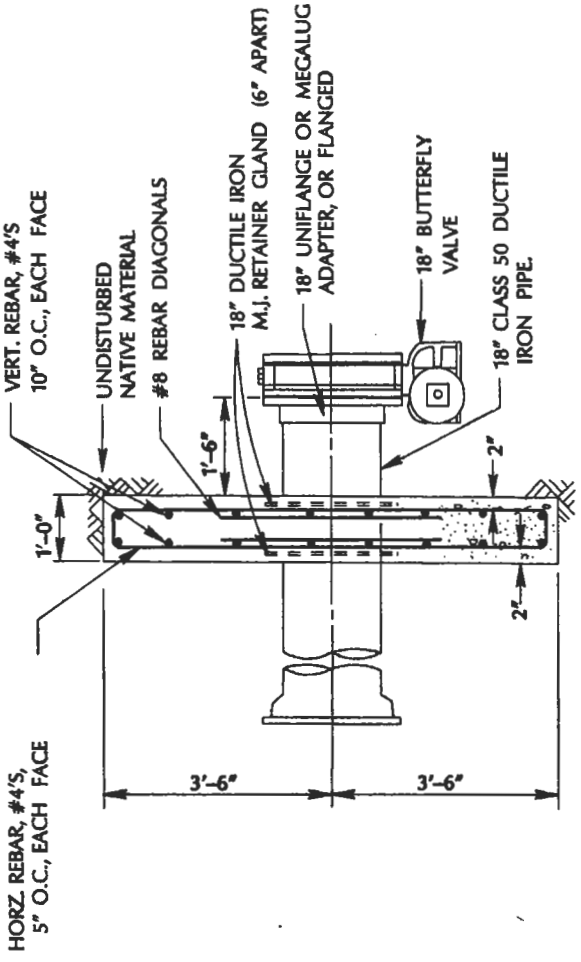

TOP VIEW

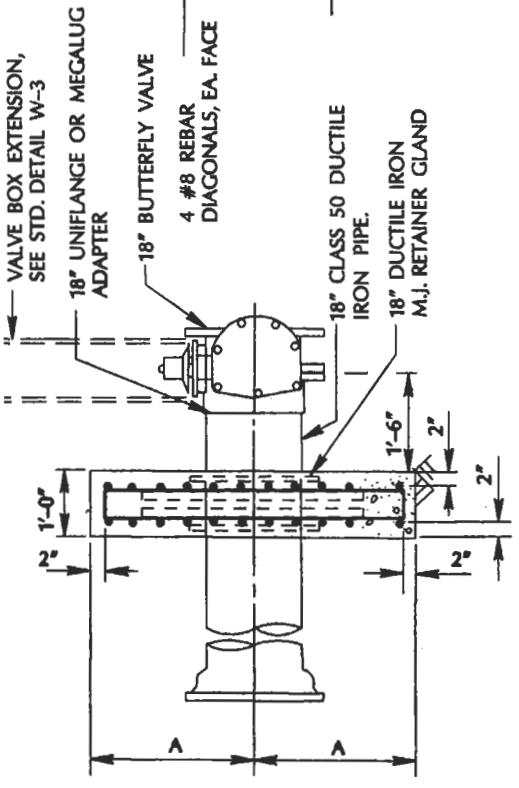

SIDE VIEW

APPROVED BY	18" BUTTERFLY VALVE ANCHOR BLOCK		DRAWING NO.
DATE	DEPARTMENT OF PUBLIC WORKS	CITY OF SAN JOSE CALIFORNIA	W-5