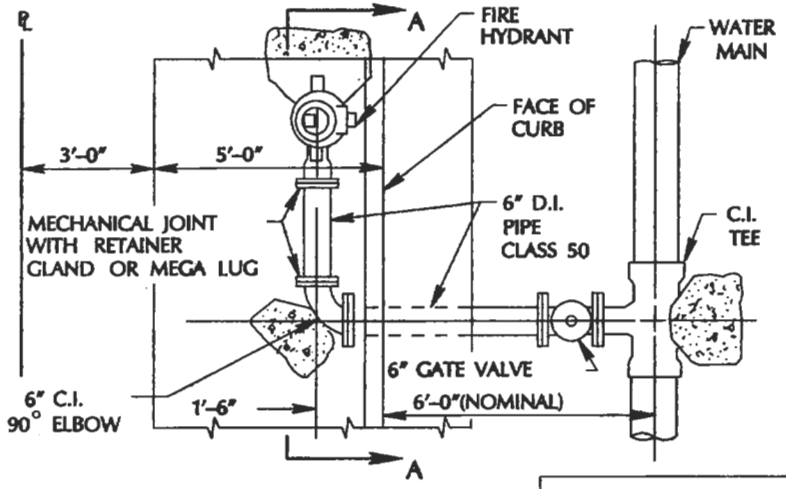

PLAN

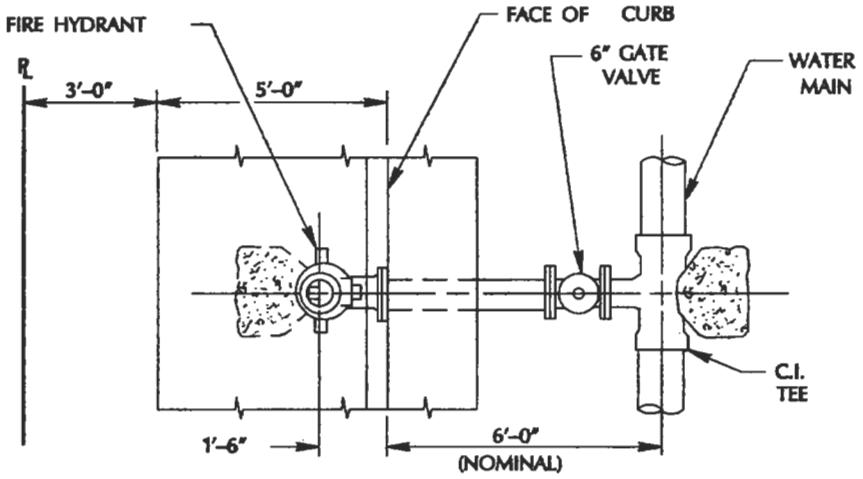

PLAN

NOTES:

1. ENCASE ALL BURIED METALLIC SURFACES WITH POLYETHYLENE WRAP PER AWWA STD. C105 (8 MIL. MIN.)
2. RETAINER GLAND OR MEGA LUG TO BE INSTALLED IF HYDRANT TEE THRUST BLOCK IS BEARING ON DISTURBED SOIL.
3. C900 PVC CAN BE SUBSTITUTED FOR DIP.

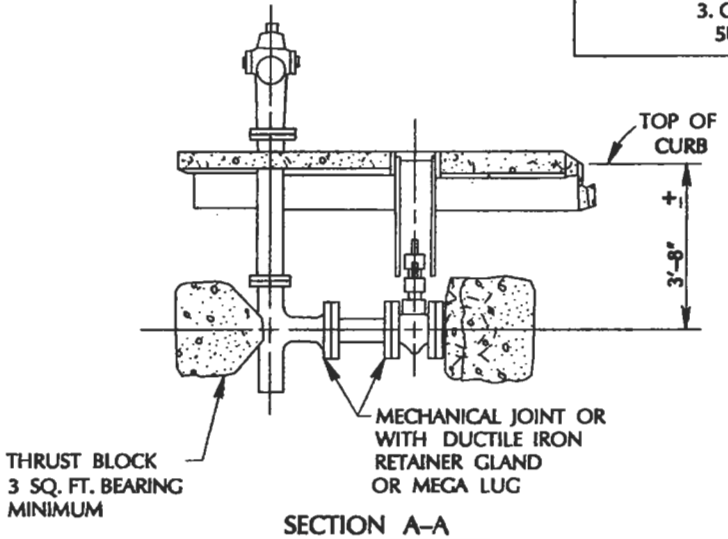

SECTION A–A

OFFSET LATERAL

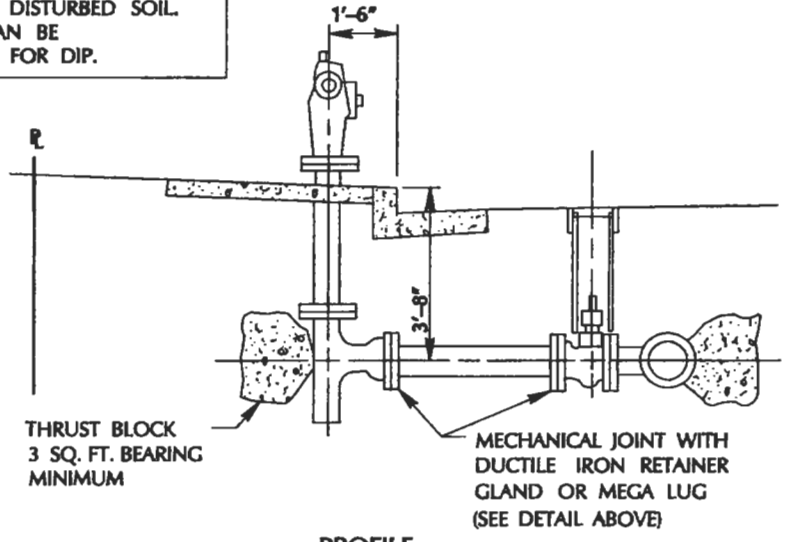

PROFILE

STRAIGHT LATERAL

APPROVED BY

DATE

ATTACHED RESIDENTIAL SIDEWALK FIRE HYDRANT INSTALLATION–MID BLOCK

DEPARTMENT OF PUBLIC WORKS

CITY OF SAN JOSE CALIFORNIA

DRAWING NO. W–18