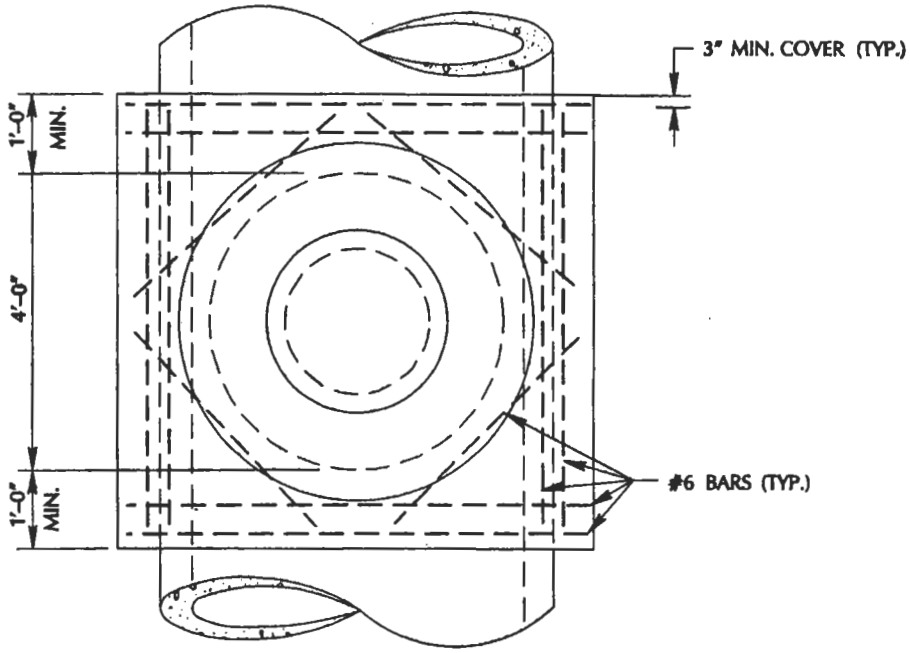

REDUCER DIMENSIONS	
PIPE DIA.	REDUCER DIA.
48"	48" x 48"
54"	60" x 48"
60"	60" x 48"
66"	72" x 48"
72"	72" x 48"

THICKNESS (t) OF MANHOLE RISER, REDUCER & CONE	
DIA.	MIN. (t)
48"	5"
60"	6"
72"	8"

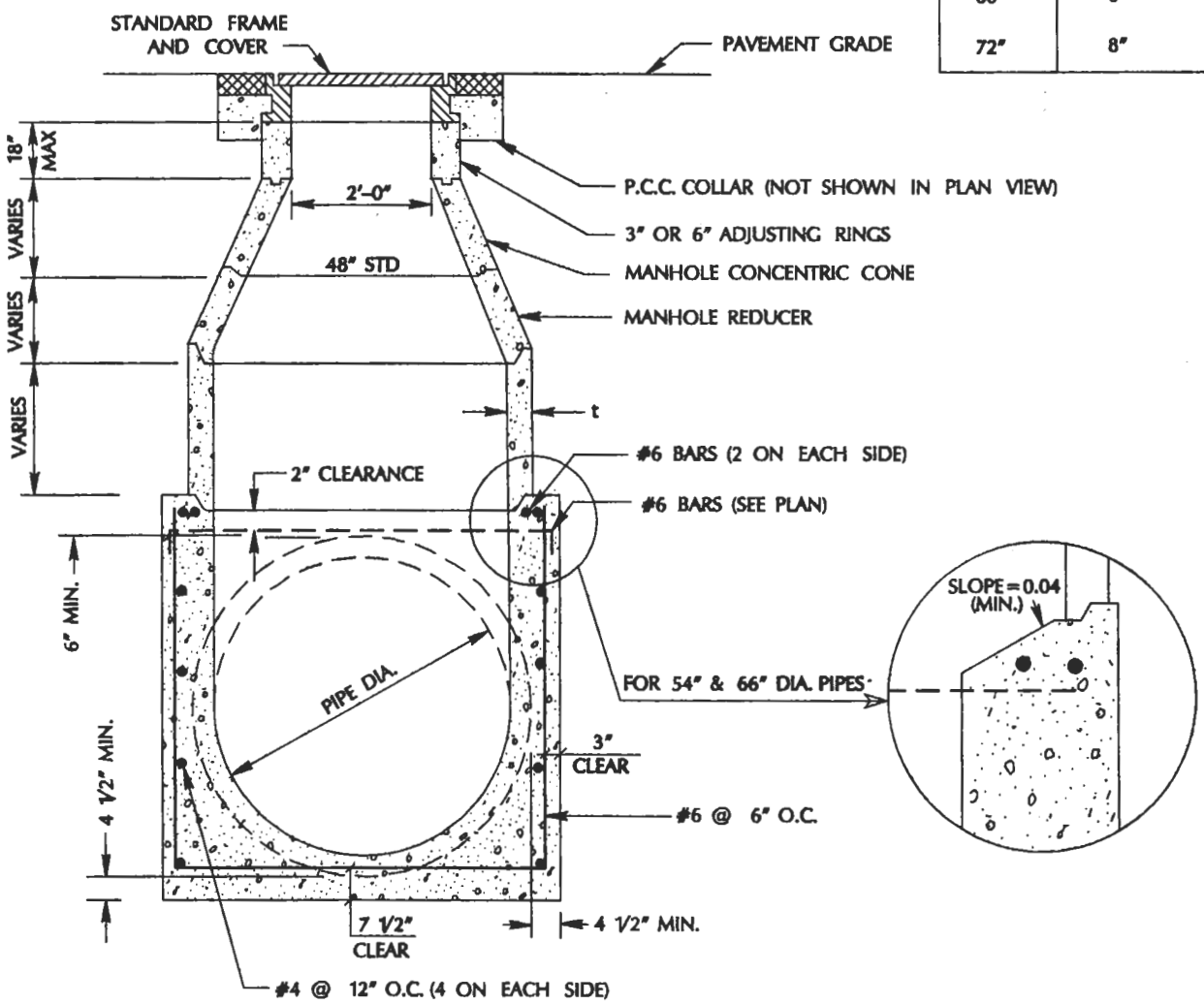

APPROVED BY	CONCENTRIC MANHOLE, 48" TO 72" DIAMETER PIPE		DRAWING NO.
MRD		CITY OF SAN JOSE CALIFORNIA	D-13
DATE 4/1/92	DEPARTMENT OF PUBLIC WORKS		