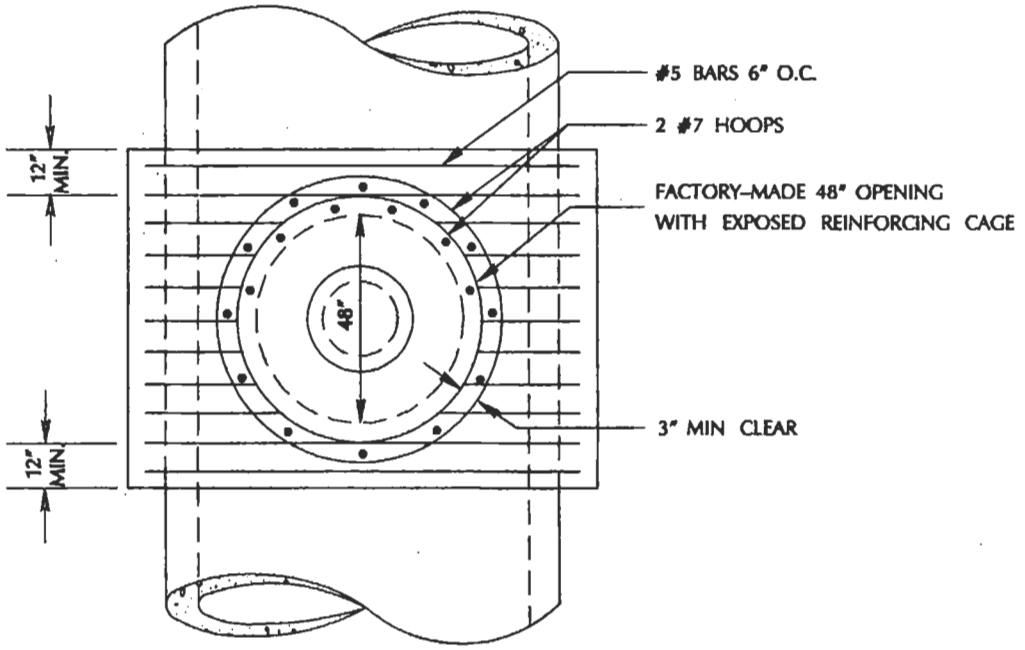

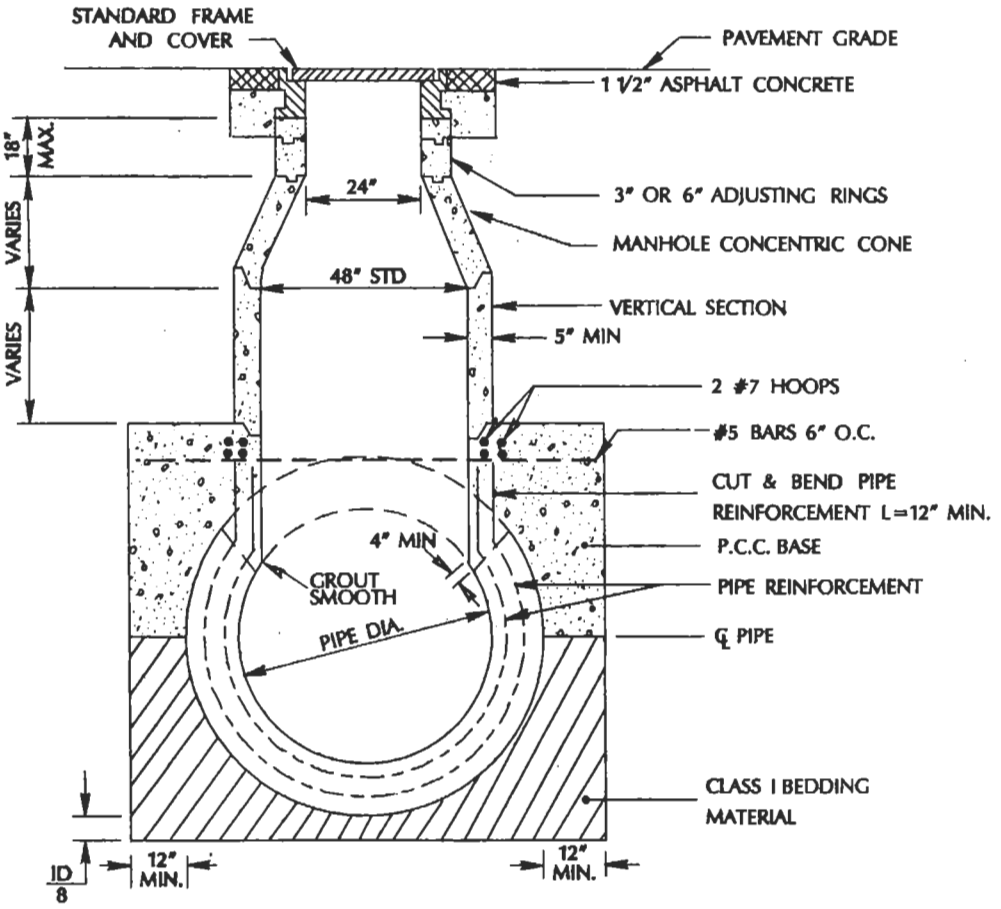

APPROVED BY	CONCENTRIC MANHOLE, 78" DIAMETER & LARGER PIPE		DRAWING NO.
MRD			D–14
DATE 4/1/92	DEPARTMENT OF PUBLIC WORKS		