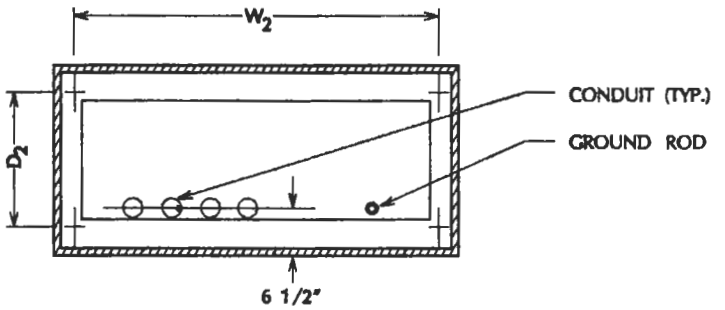

TOP VIEW

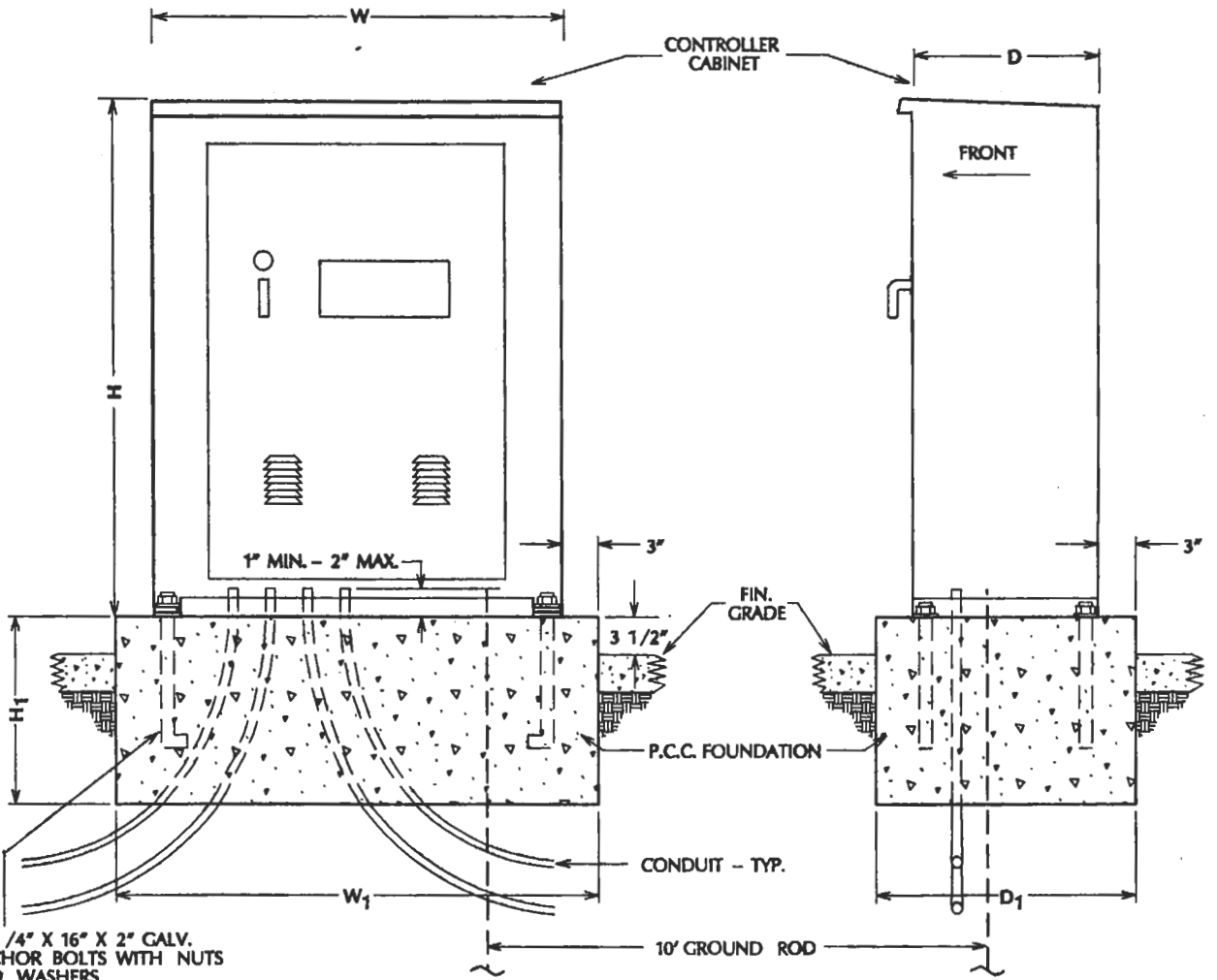

FRONT VIEW

SIDE VIEW

NOTE:
SEE DRAWINGS E-51 AND E-52 FOR GROUNDING /BONDING REQUIREMENTS AND DRAWING E-59 FOR DIMENSIONS.

APPROVED BY	CONTROLLER CABINET /FOUNDATION TYPE P		DRAWING NO.
DATE 3/3/92	DEPARTMENT OF PUBLIC WORKS	CITY OF SAN JOSE CALIFORNIA	E-58