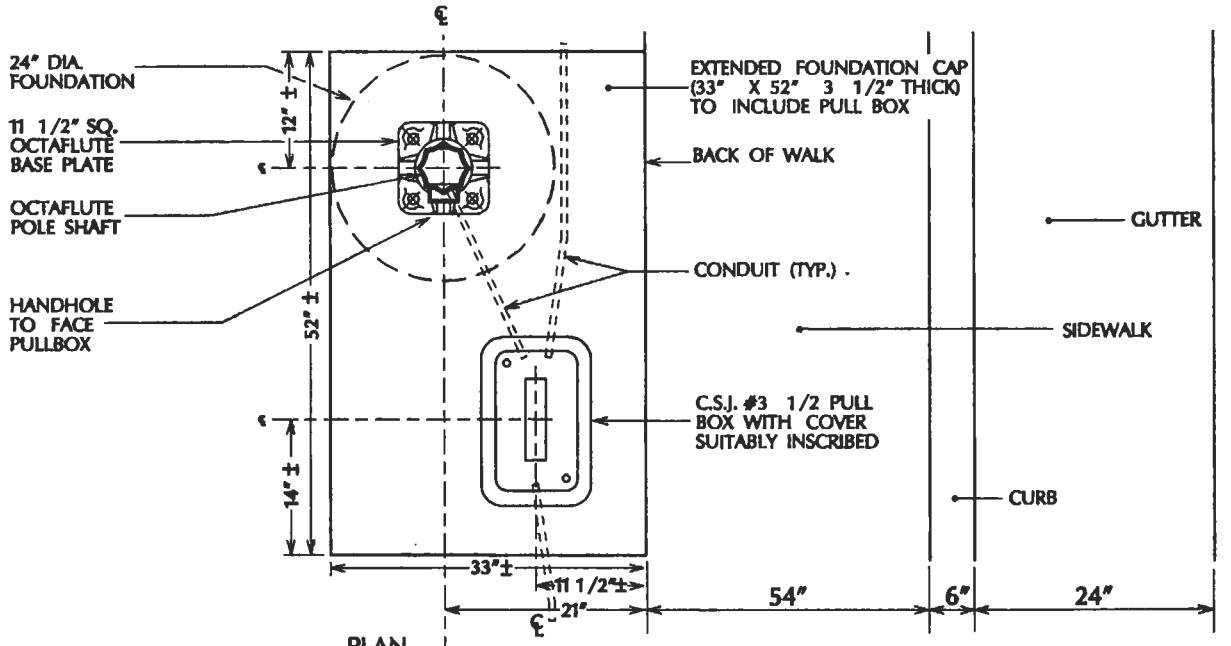

PLAN

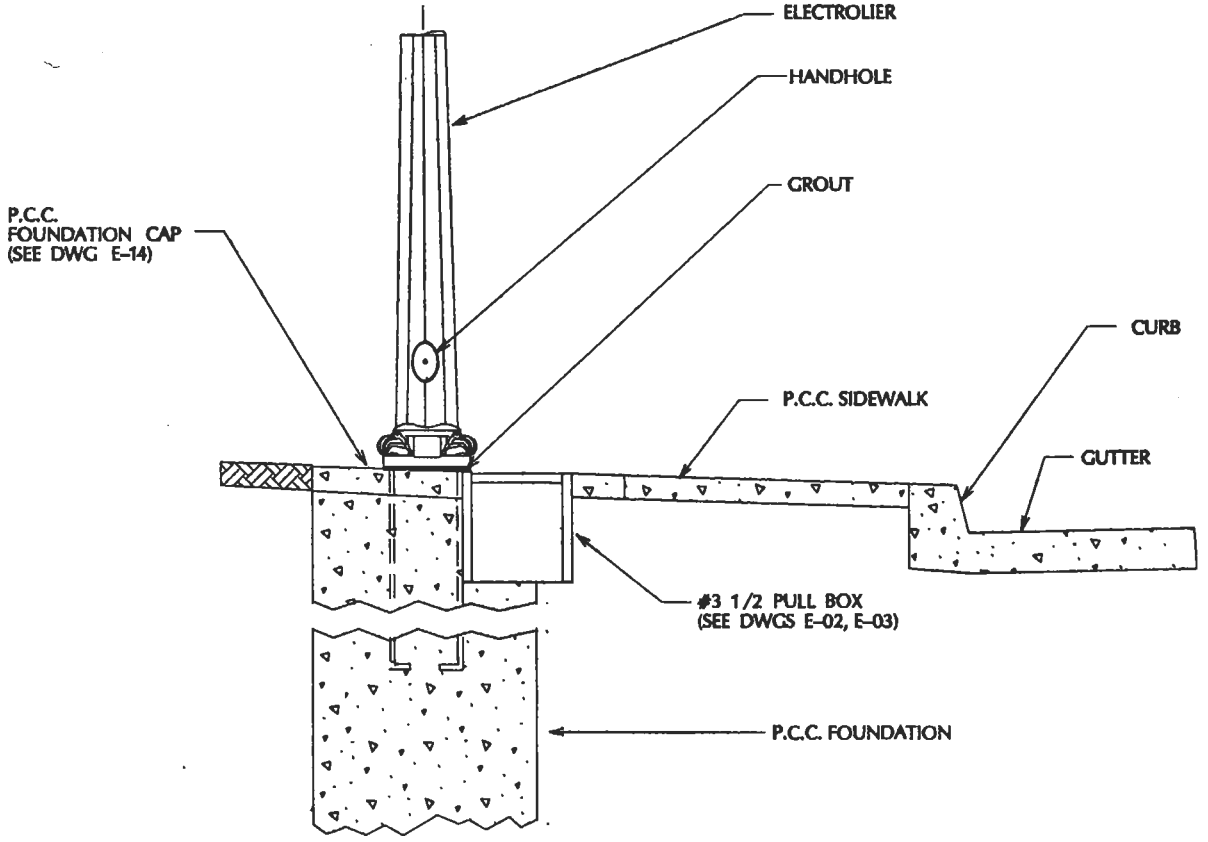

ELEVATION

APPROVED BY	ELECTROLIER LOCATION 4'6" ATTACHED SIDEWALK		DRAWING NO.
DATE 3/3/92	DEPARTMENT OF PUBLIC WORKS	CITY OF SAN JOSE CALIFORNIA	E-12