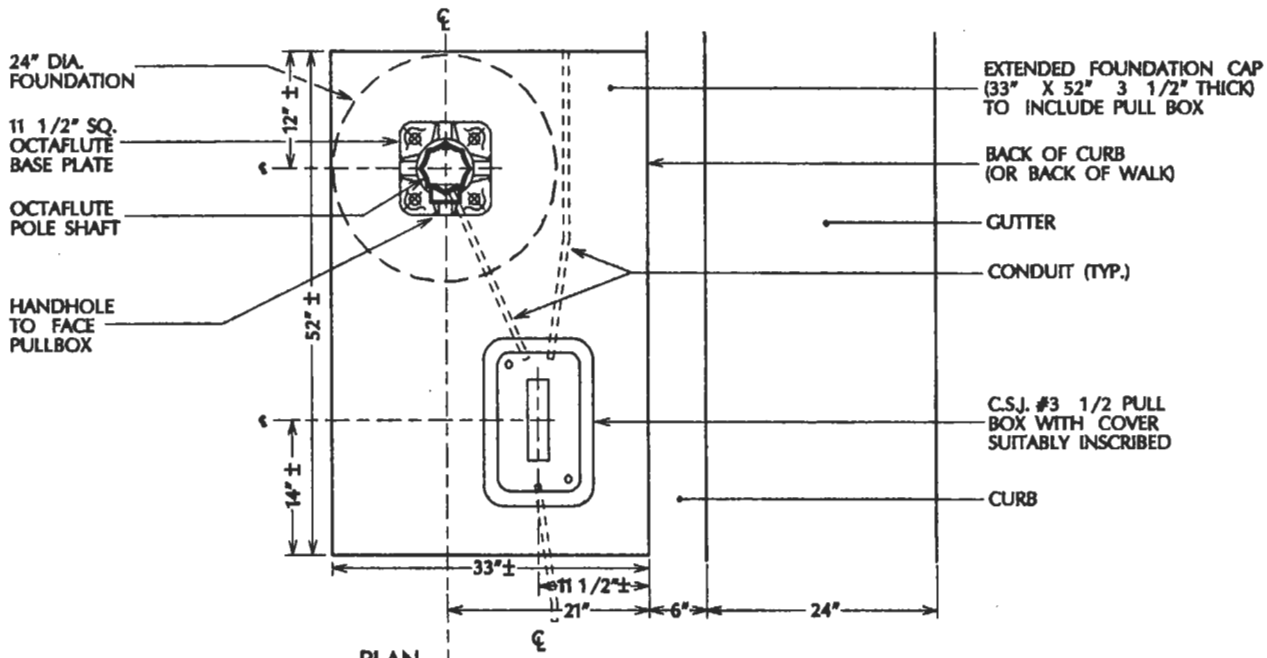

PLAN

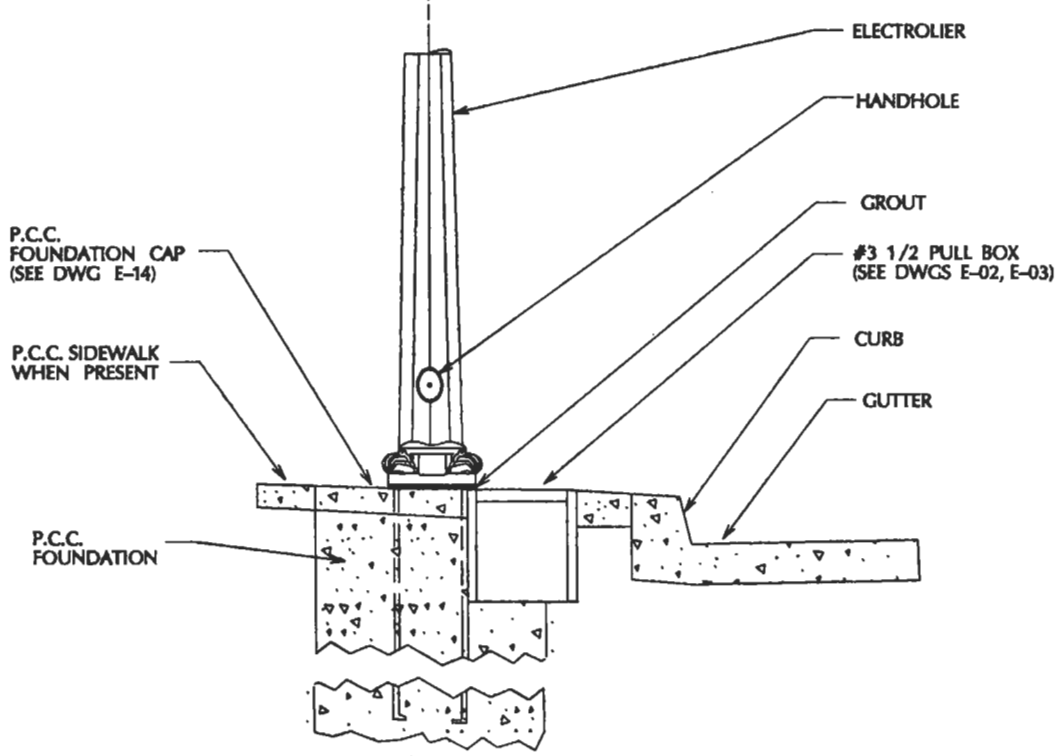

ELEVATION

APPROVED BY	ELECTROLIER LOCATION WIDE ATTACHED OR DETACHED WALK		DRAWING NO.
DATE 3/3/92	DEPARTMENT OF PUBLIC WORKS	CITY OF SAN JOSE CALIFORNIA	E-11