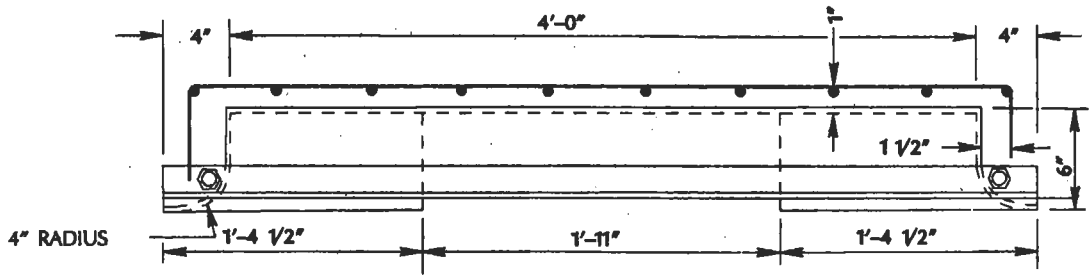

TOP

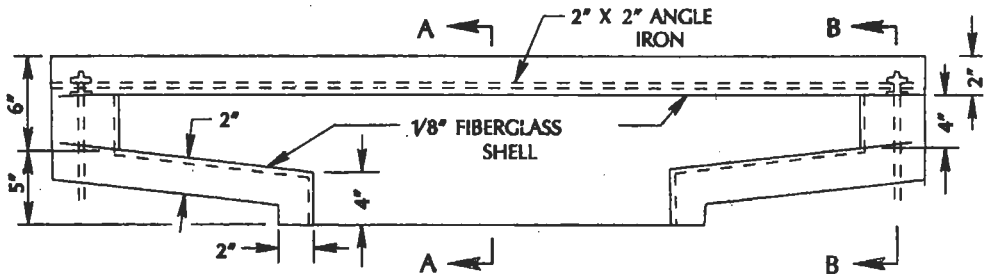

FRONT

NOTE:

#10 – 6"x 6" WELDED WIRE FABRIC SHALL BE SECURELY ATTACHED AT 6" INTERVALS TO THE BACK OF THE 2"x 2" ANGLE IRON

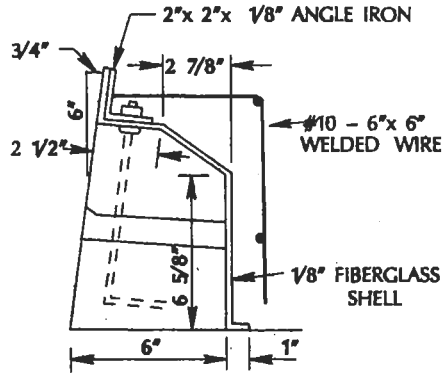

SECTION A–A

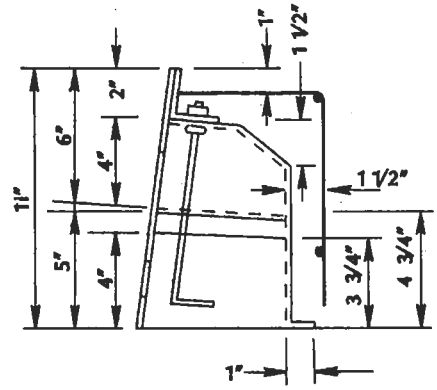

SECTION B–B

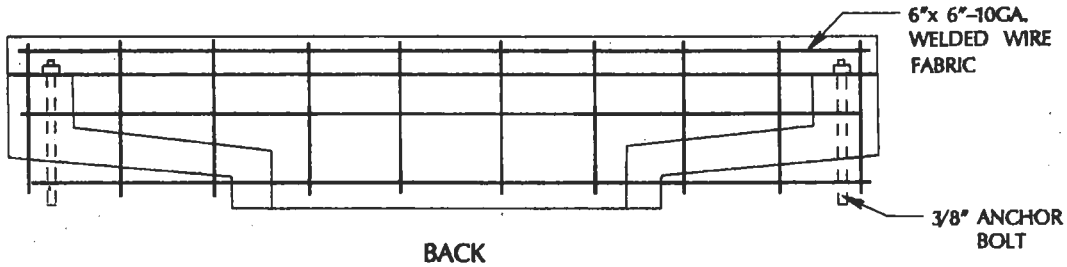

BACK

APPROVED BY MRD	FABRICATION DETAIL FIBERGLASS LINER ASSEMBLY GALLERY	CITY OF SAN JOSE CALIFORNIA	DRAWING NO.
DATE 4/1/92	DEPARTMENT OF PUBLIC WORKS		D–8