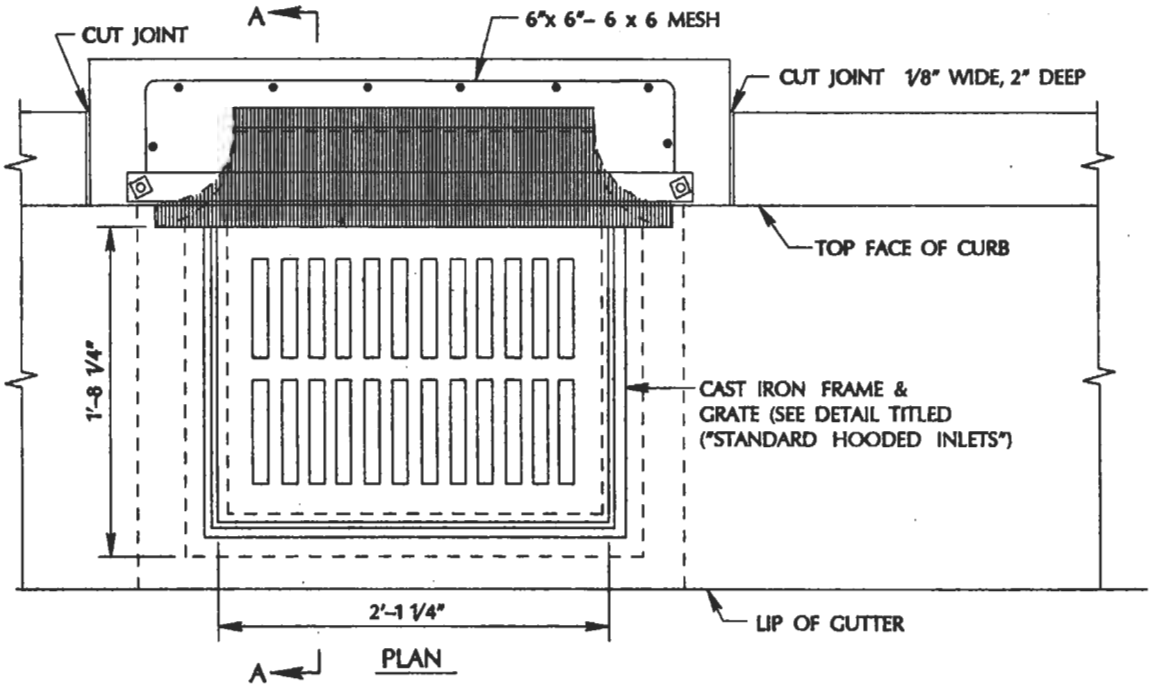

PLAN

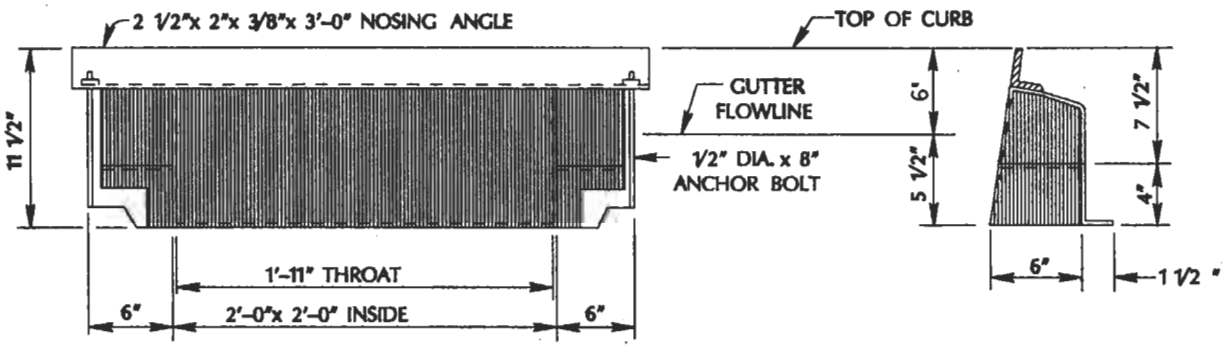

ELEVATION

NOTES:

1. FIBERGLASS LINER ASSEMBLY IS FOR OPTIONAL USE INSTEAD OF STANDARD HOODED INLET.
2. WELDED WIRE MESH 6"x 6" – 6 x 6 IS REINFORCING.
3. FIBERGLASS LINER INDICATED THUS–

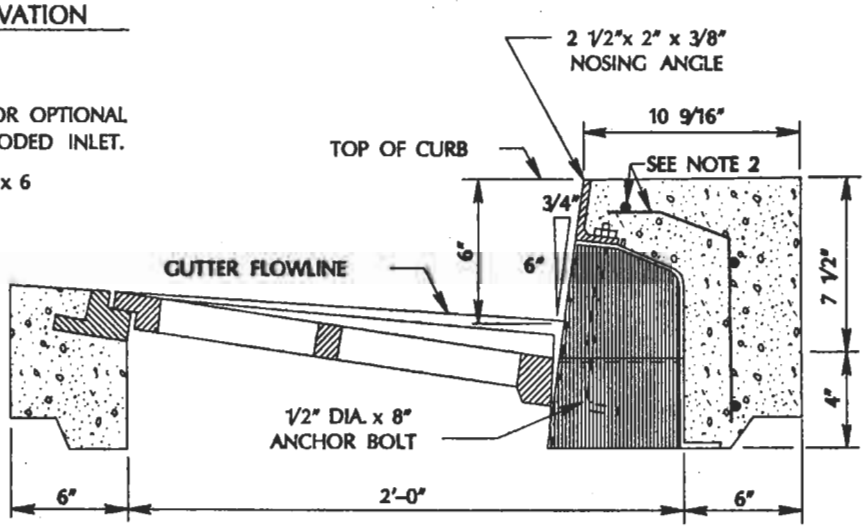

SECTION A–A

APPROVED BY MRD	FIBERGLASS LINER ASSEMBLY OPTIONAL STANDARD INLET HOOD		DRAWING NO.
DATE 4/1/92	DEPARTMENT OF PUBLIC WORKS	CITY OF SAN JOSE CALIFORNIA	D–7