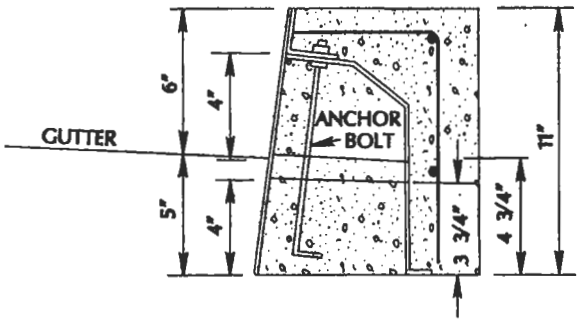

SECTION B–B

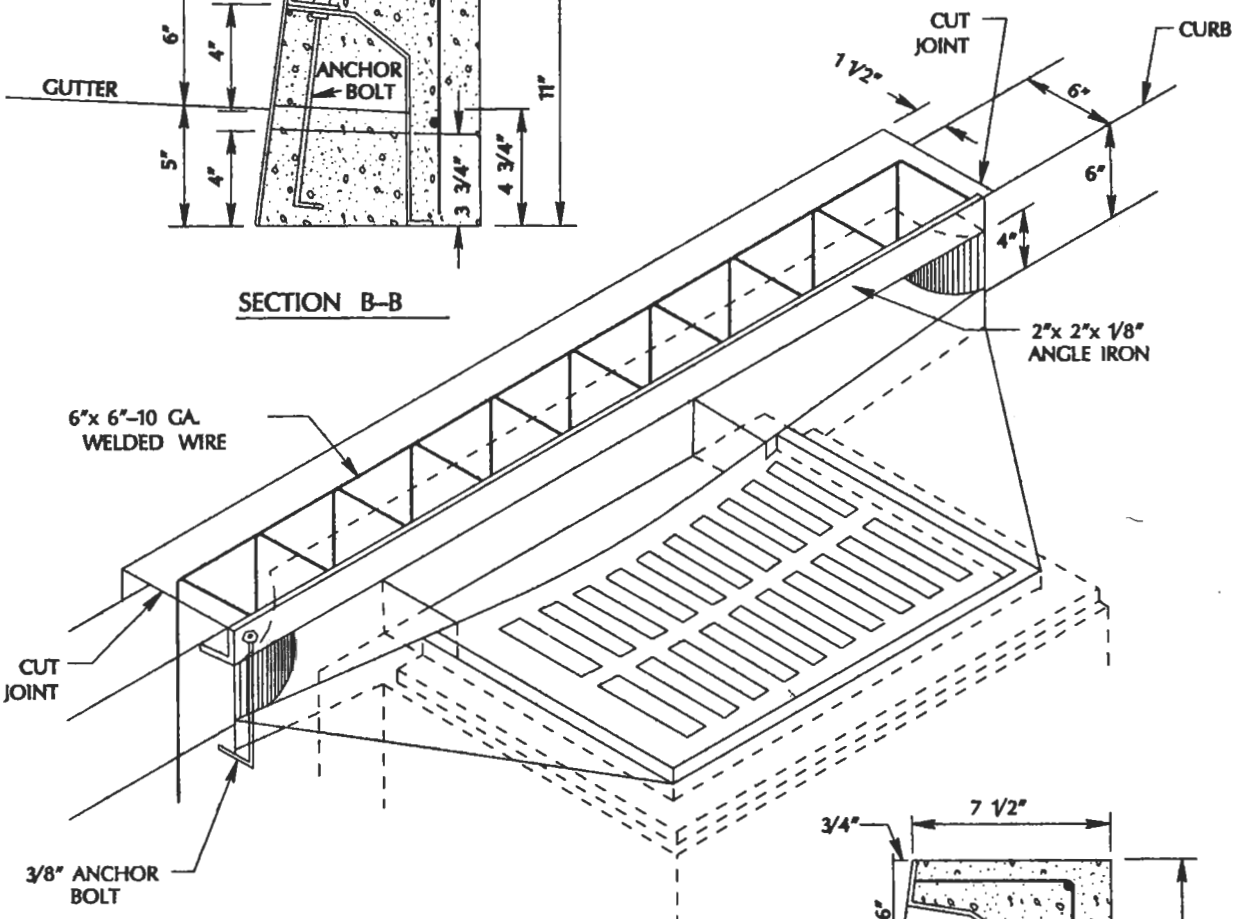

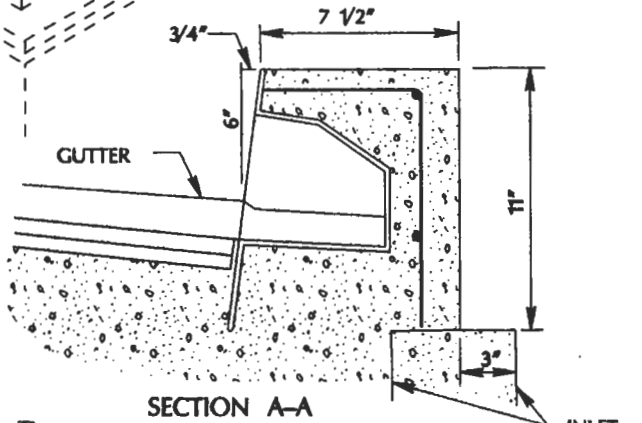

SECTION A–A

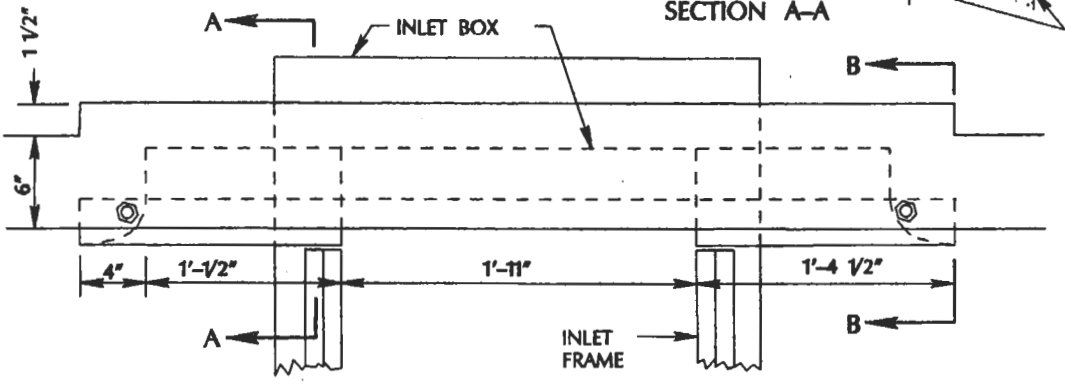

PLAN

APPROVED BY	INSTALLATION DETAIL FIBERGLASS LINER ASSEMBLY GALLERY		DRAWING NO.
WRD		CITY OF SAN JOSE CALIFORNIA	D–9
DATE 4/1/92	DEPARTMENT OF PUBLIC WORKS		