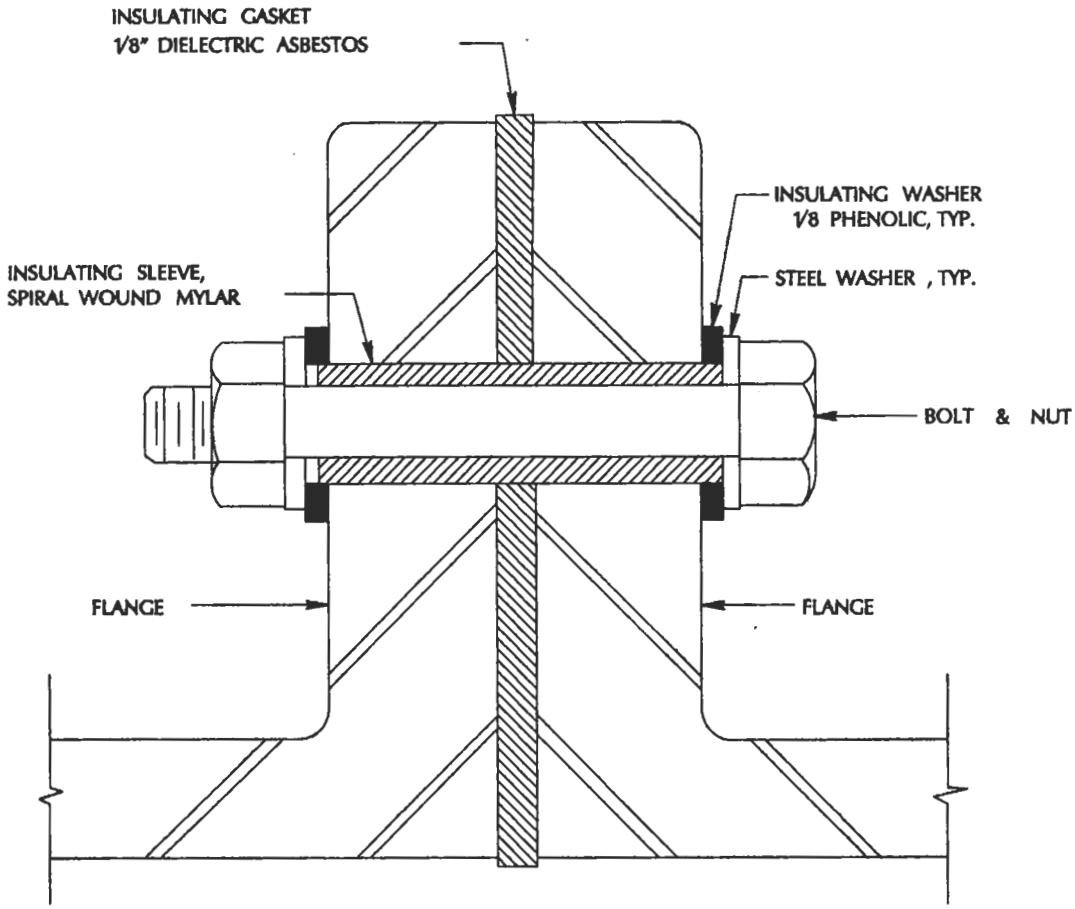

APPROVED BY	INSULATING FLANGED JOINT		DRAWING NO.
DATE	DEPARTMENT OF PUBLIC WORKS	CITY OF SAN JOSE CALIFORNIA	W–16