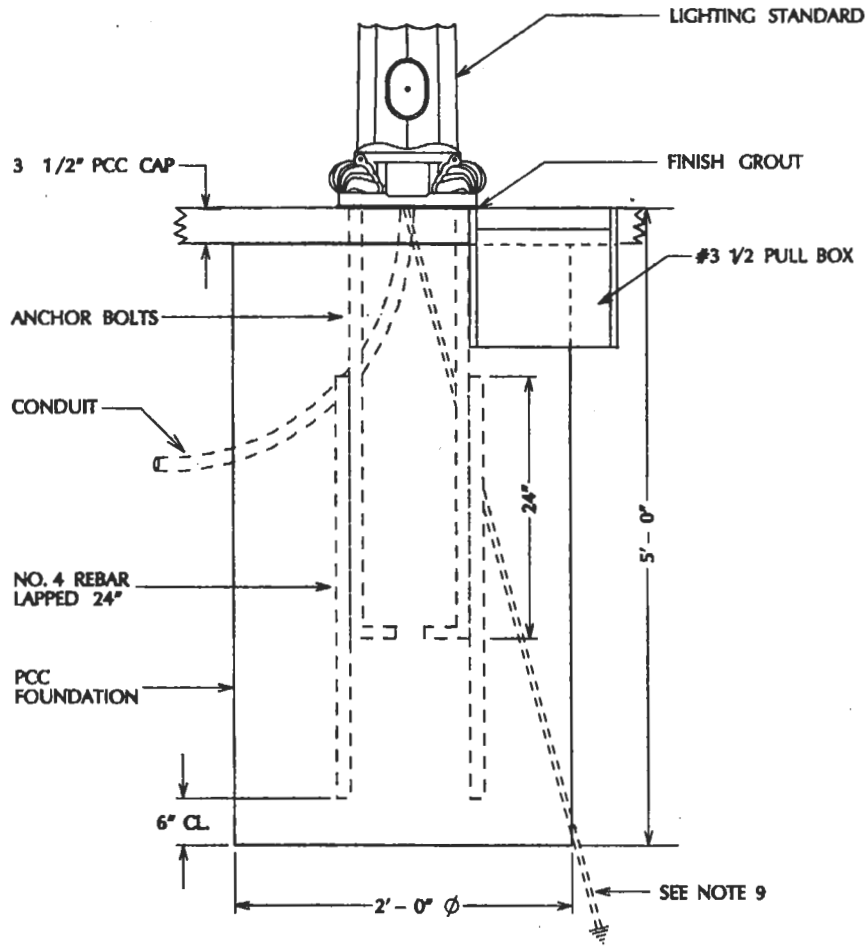

TYPE 2

NOTES:

1. STOP FOUNDATION POUR 3 1/2" BELOW GRADE. PLACE FINISH CAP AFTER STANDARD IS SET AND PLUMBED. BUILD UP GROUT UNDER STANDARD BASE ON LOW SIDE (TYP.).
2. SURFACE OF FINISH CAP TO BE AT GRADE AND SLOPED TO MATCH EXISTING OR FUTURE SIDEWALK (TYP.).
3. ANCHOR BOLT SIZE AND LENGTH AS INDICATED ON CHART (TYP.).
4. 1/2" REINFORCED STEEL (#4 REBAR) WIRED TO ANCHOR BOLT WITH 24" OVERLAP (TYP.).
5. 4" SECTION OF ANCHOR BOLT BENT AT 90 RIGHT ANGLE (TYP.).
6. STANDARDS TO BE SET AT 1'-9" TO CENTER FROM BACK OF CURB UNLESS SHOWN OTHERWISE
7. SEE DRAWING E-15 FOR BOLT CIRCLE INFORMATION.
8. SEE DRAWING E-14 FOR PLAN LOCATION AND FOUNDATION CAP DETAIL REQUIREMENTS OF STREETLIGHT.
9. GROUND ROD SET OBLIQUELY THROUGH FOUNDATION IN UNDISTURBED SOIL FOR STREETLIGHTS FED OVERHEAD AND SET IN PULL BOX FOR STREETLIGHTS FED UNDERGROUND.

APPROVED BY			DRAWING NO.
DATE 3/3/92	LIGHTING STANDARD – OCTAFLUTE TYPE 2 FOUNDATION DETAIL	CITY OF SAN JOSE CALIFORNIA	E-18
	DEPARTMENT OF PUBLIC WORKS		