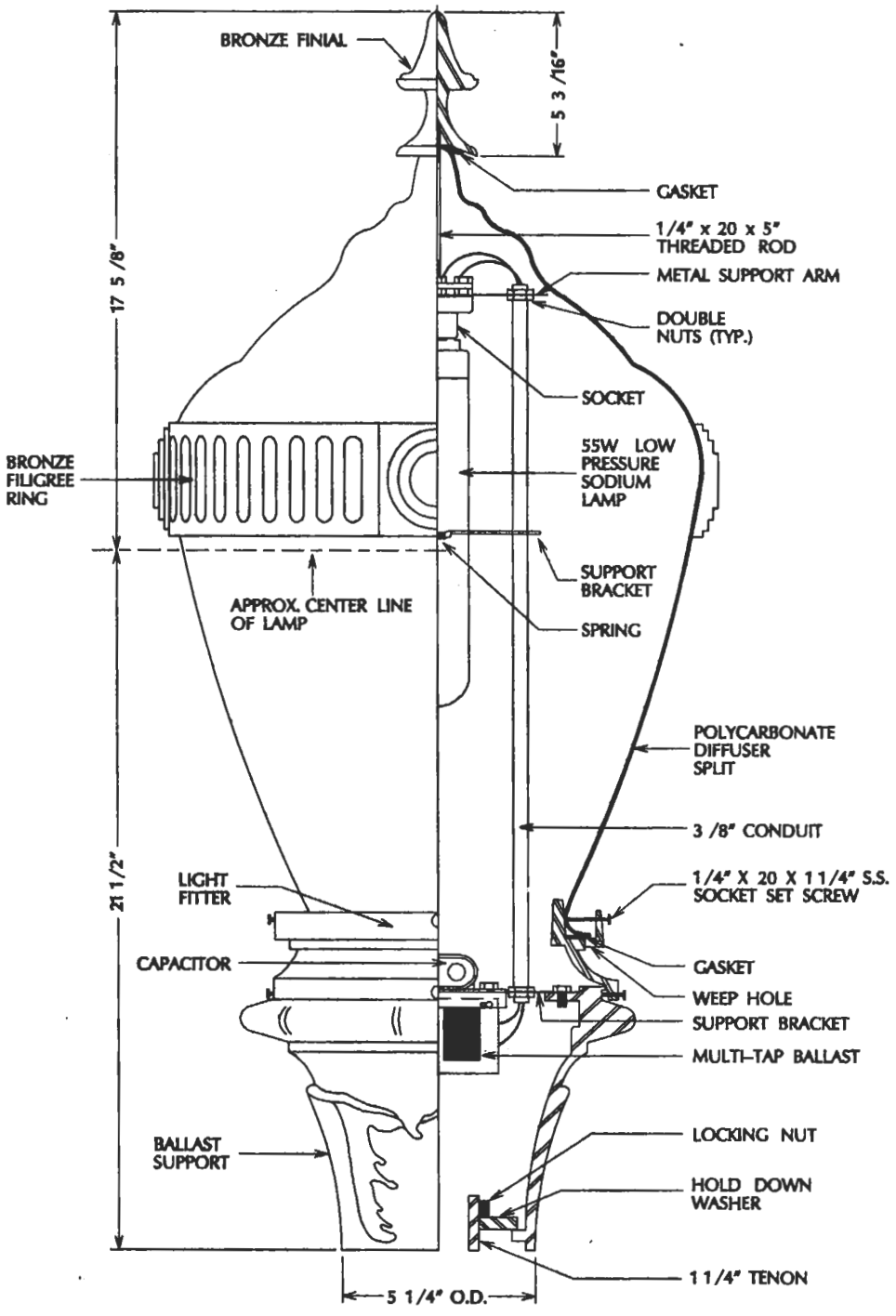

APPROVED BY	ORNAMENTAL L.P.S. LUMINAIRE ASSEMBLY FOR TWIN UNIT		DRAWING NO.
DATE 3/3/92	DEPARTMENT OF PUBLIC WORKS	CITY OF SAN JOSE CALIFORNIA	E–26