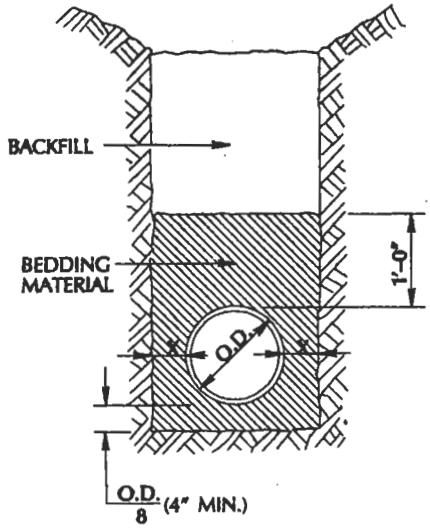

TYPE A

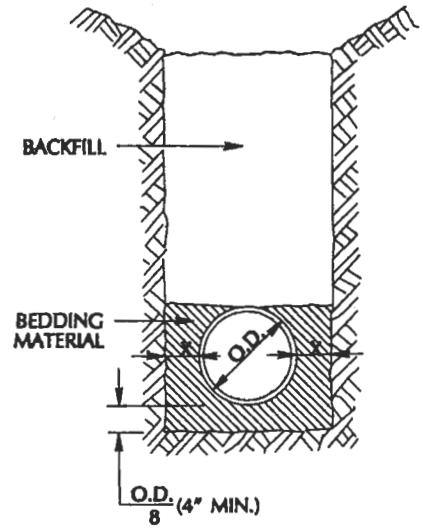

TYPE AO

PIPE SIZE	LIMITS OF X	
	MINIMUM	MAXIMUM
24" OR LESS	4"	4" + O.D./4
27" AND GREATER	6"	6" + O.D./4

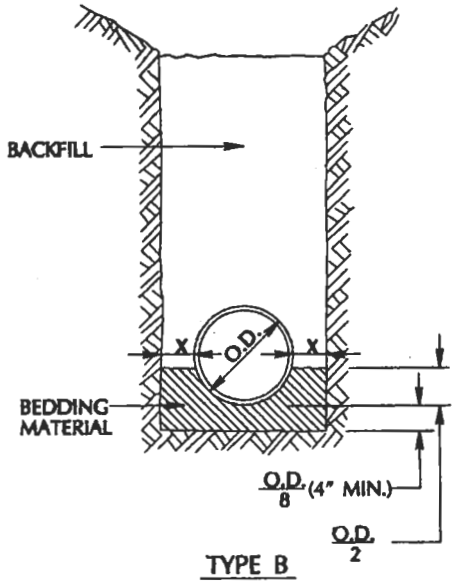

TYPE B

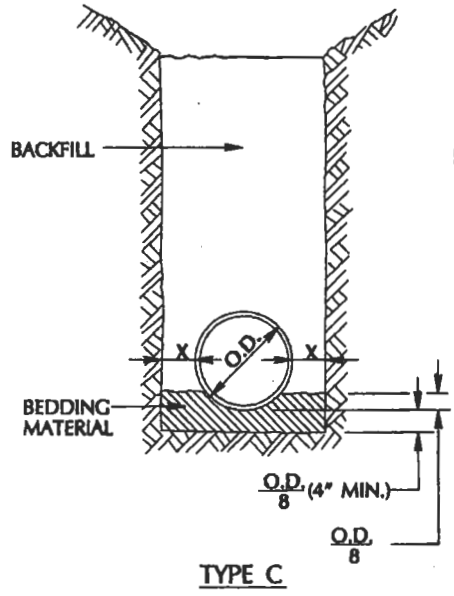

TYPE C

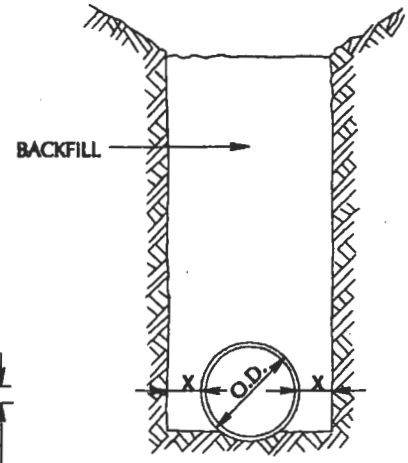

TYPE D

APPROVED BY	PIPE BEDDING – TYPES		DRAWING NO.
MRD		CITY OF SAN JOSE CALIFORNIA	D–1
DATE 2/1/92	DEPARTMENT OF PUBLIC WORKS		