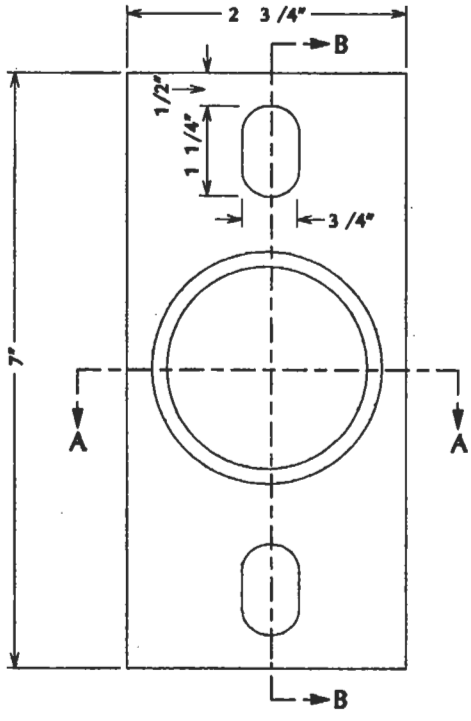

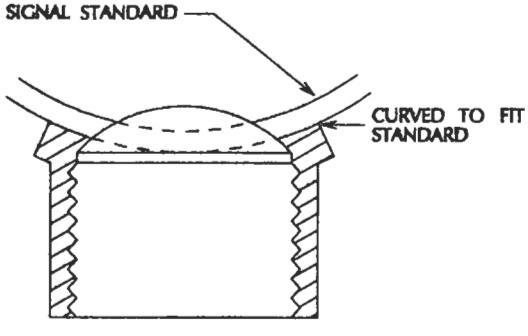

SECTION A – A

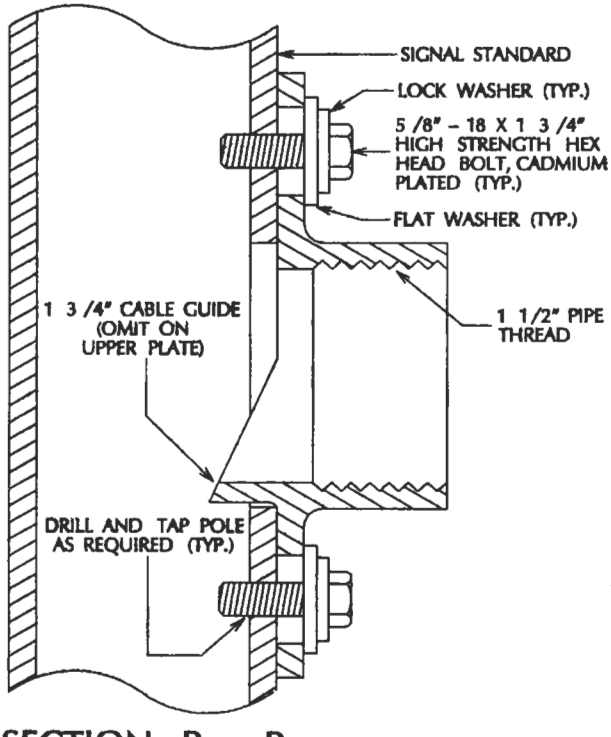

SECTION B – B

APPROVED BY	POLE PLATE FOR SIDE SIGNAL HEAD MOUNTINGS		DRAWING NO.
DATE 3/3/92	DEPARTMENT OF PUBLIC WORKS	CITY OF SAN JOSE CALIFORNIA	E–69