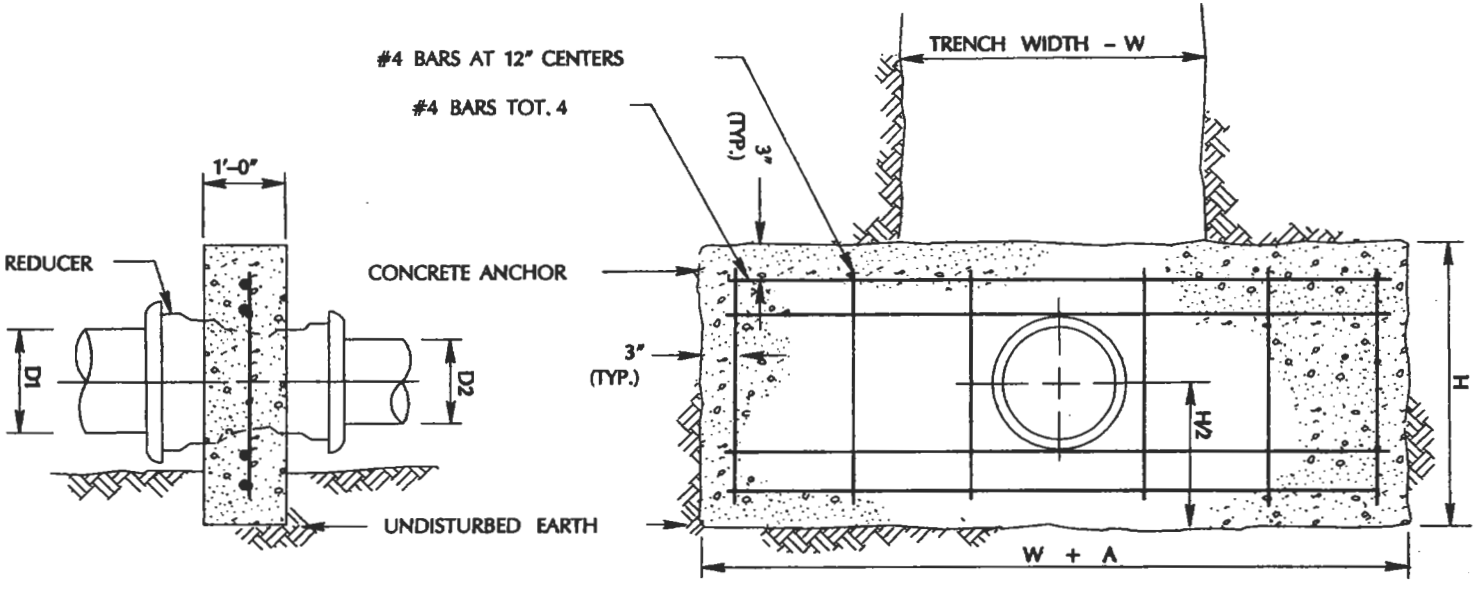

NOTES:

1. ENCASE ALL BURIED METALLIC SURFACES WITH POLYETHYLENE WRAP AS SPECIFIED IN AWWA C105.
2. REDUCER ANCHOR IS REQUIRED ONLY WHEN LARGER CONNECTING JOINT IS OTHER THAN FLANGED.

REDUCER SIZE D1 x D2	ANCHORS FOR REDUCERS			
	250 PSI TEST		200 PSI TEST	
	H	A	H	A
18" x 12"	3'9"	5'0"	3'0"	5'0"
12" x 10"	1'8"	2'0"	1'4"	2'0"
12" x 8"	2'6"	2'6"	2'0"	2'6"
12" x 6"	2'6"	3'0"	2'0"	3'2"
8" x 6"	1'3"	2'0"	1'0"	2'0"
8" X 4"	1'3"	3'0"	1'0"	2'10"
6" x 4"	1'4"	1'4"	1'0"	1'4"

APPROVED BY

DATE

DEPARTMENT OF PUBLIC WORKS

REDUCER ANCHOR BLOCK

CITY OF SAN JOSE CALIFORNIA

DRAWING NO. W-9