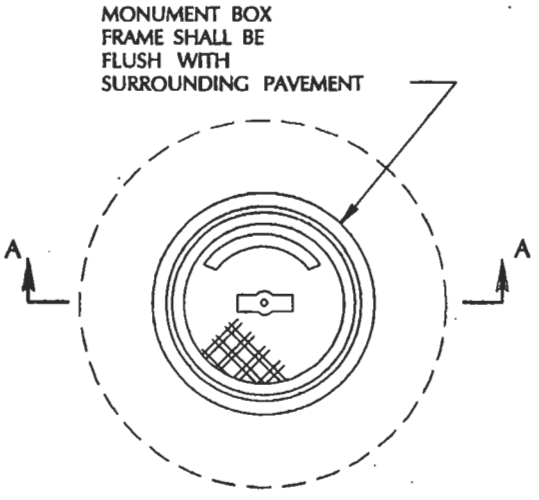

COVER INSTALLATION
PLAN VIEW

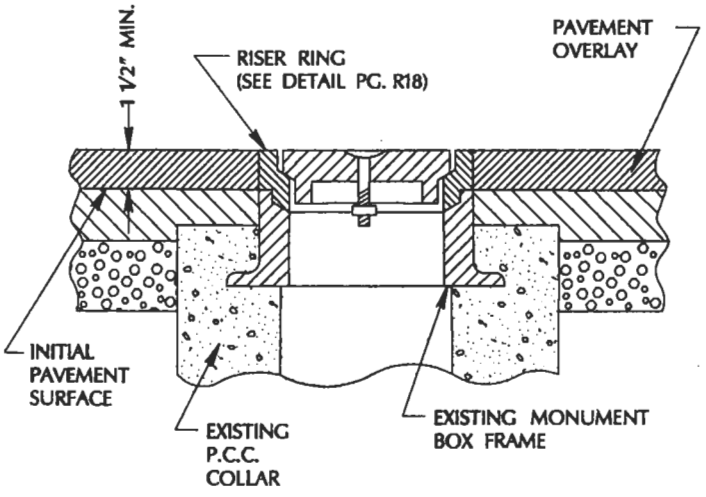

SECTION A–A
STANDARD MONUMENT, RESURFACE
WITH EXISTING ROUND BOX

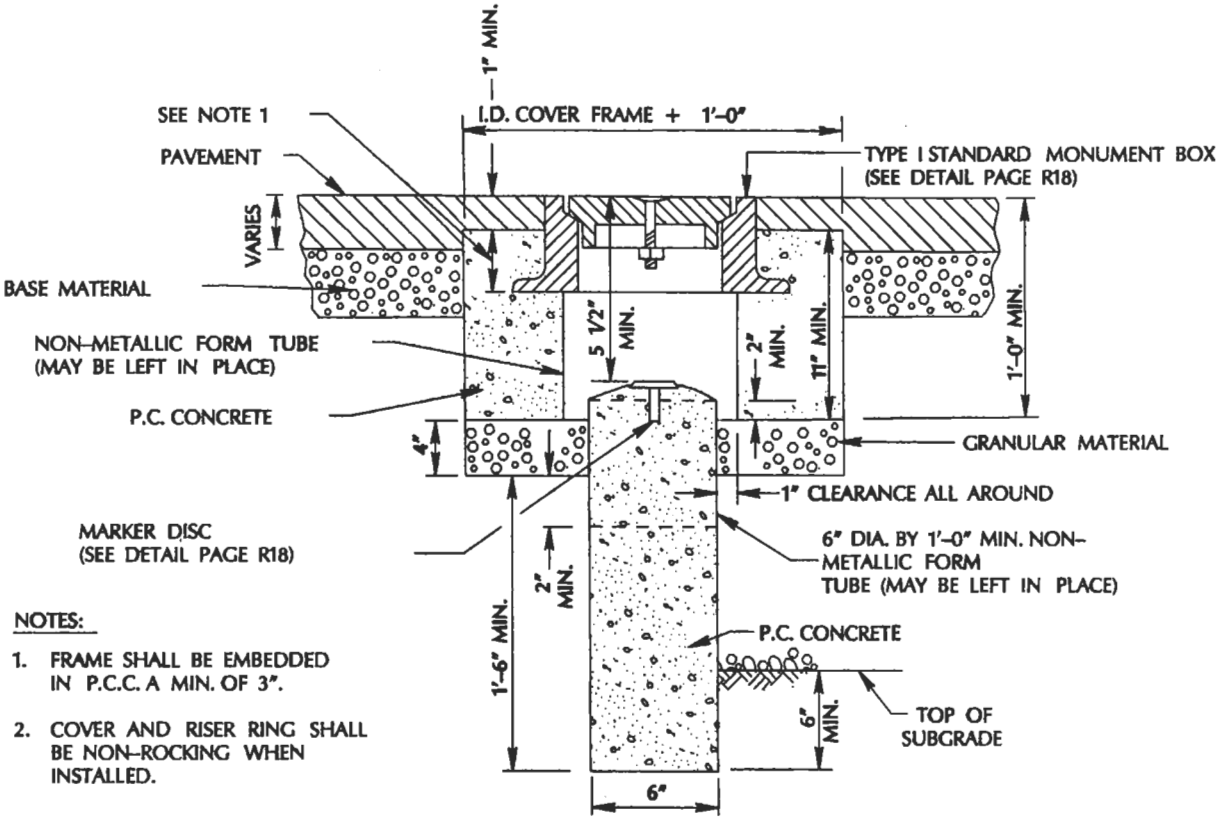

NOTES:

1. FRAME SHALL BE EMBEDDED IN P.C.C. A MIN. OF 3".
2. COVER AND RISER RING SHALL BE NON-ROCKING WHEN INSTALLED.

SECTION A
STANDARD MONUMENT INITIAL INSTALLATION

APPROVED BY	STANDARD CITY MONUMENT		DRAWING NO.
DATE 4/10/92	DEPARTMENT OF PUBLIC WORKS	CITY OF SAN JOSE CALIFORNIA	R–16