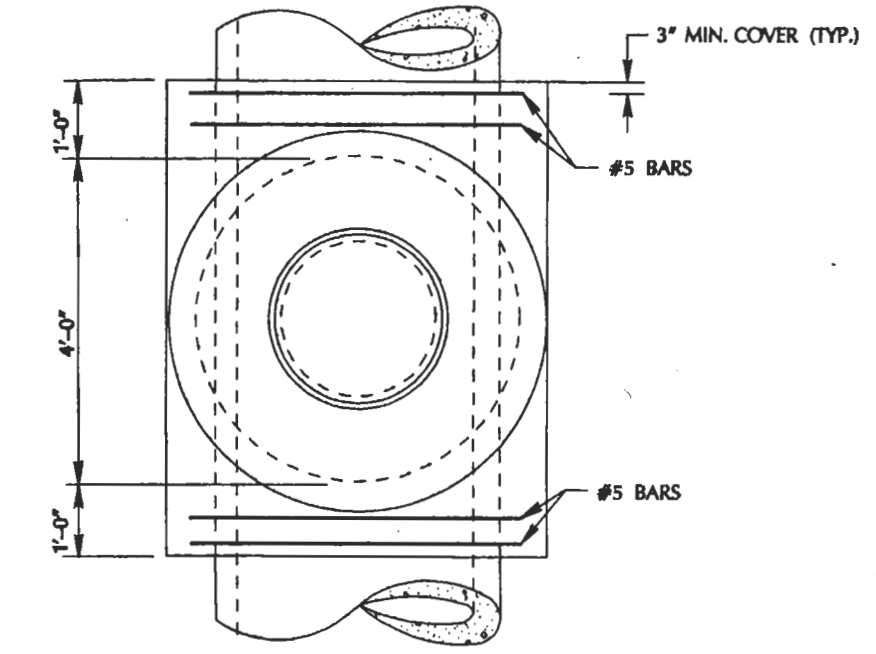

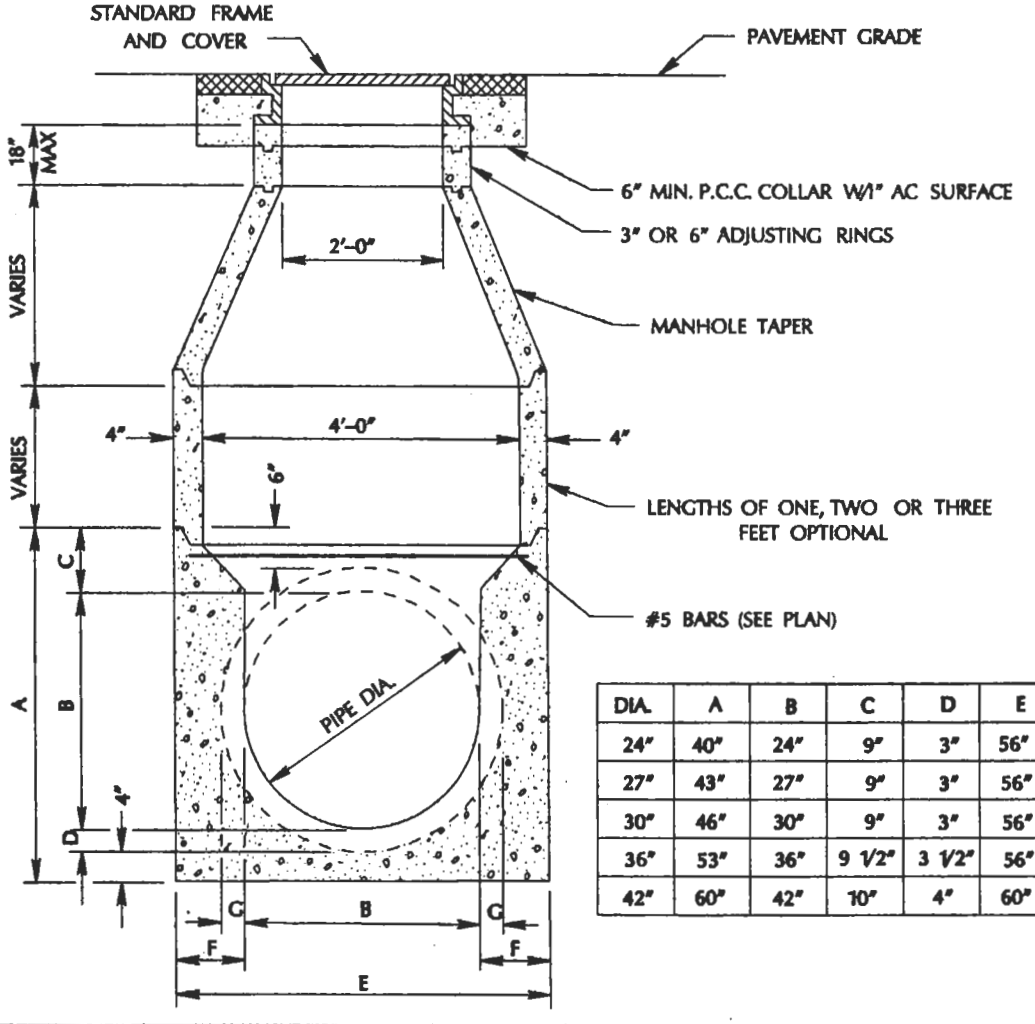

DIA.	A	B	C	D	E	F	MIN. G
24"	40"	24"	9"	3"	56"	16"	3"
27"	43"	27"	9"	3"	56"	14 1/2"	3"
30"	46"	30"	9"	3"	56"	13"	3"
36"	53"	36"	9 1/2"	3 1/2"	56"	10"	3 1/2"
42"	60"	42"	10"	4"	60"	9"	4"

APPROVED BY MRD

DATE 4/1/92

STANDARD CONCENTRIC MANHOLE, 24" THRU 42" DIAMETER PIPE

DEPARTMENT OF PUBLIC WORKS

CITY OF SAN JOSE CALIFORNIA

DRAWING NO. D-12