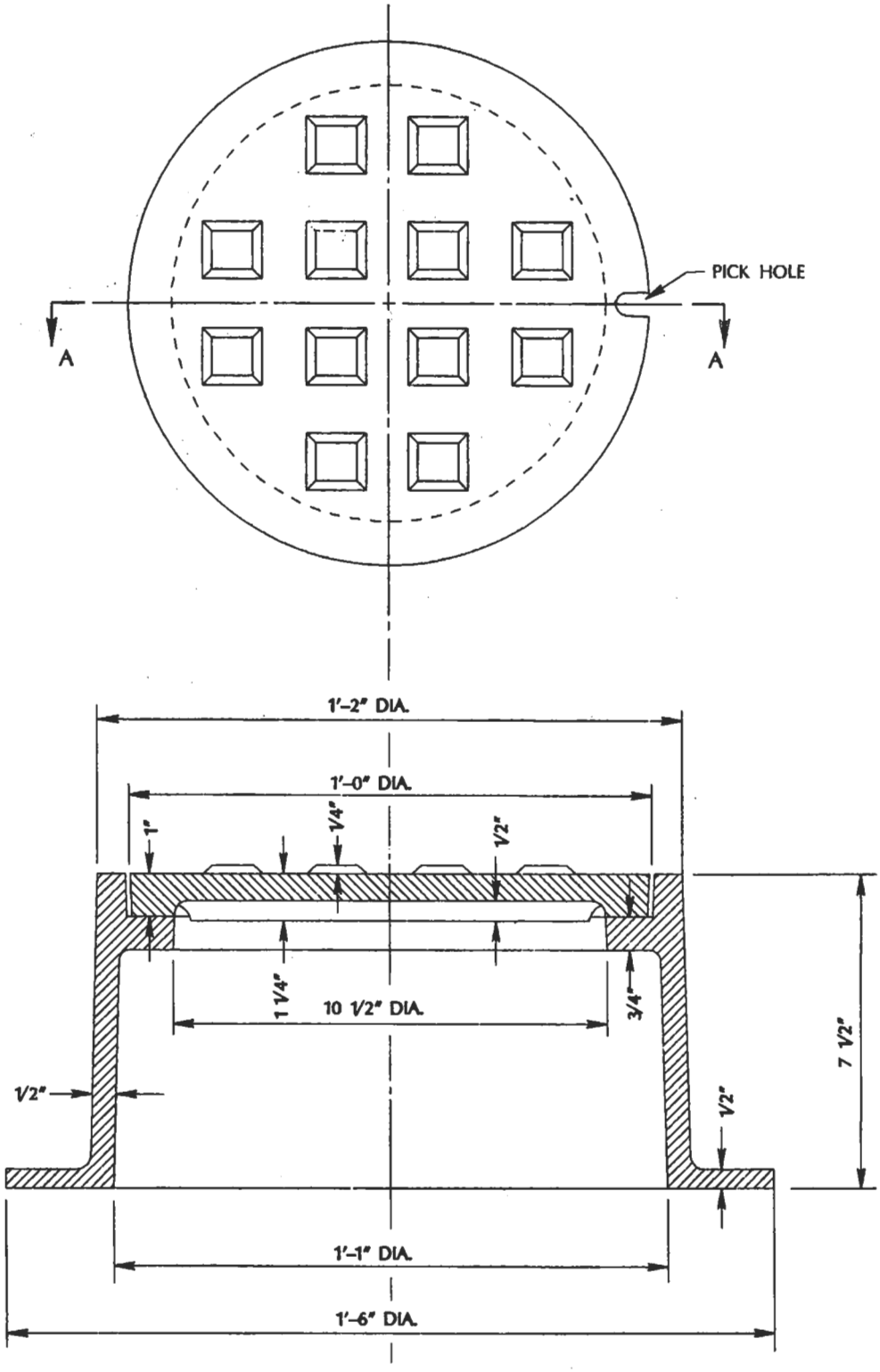

SECTION A-A

NOTE: WEIGHT 110 LB. (APPROX.)

APPROVED BY	STANDARD RISER FRAME AND COVER		DRAWING NO.
DATE 12-17-91	DEPARTMENT OF PUBLIC WORKS	CITY OF SAN JOSE CALIFORNIA	D-18