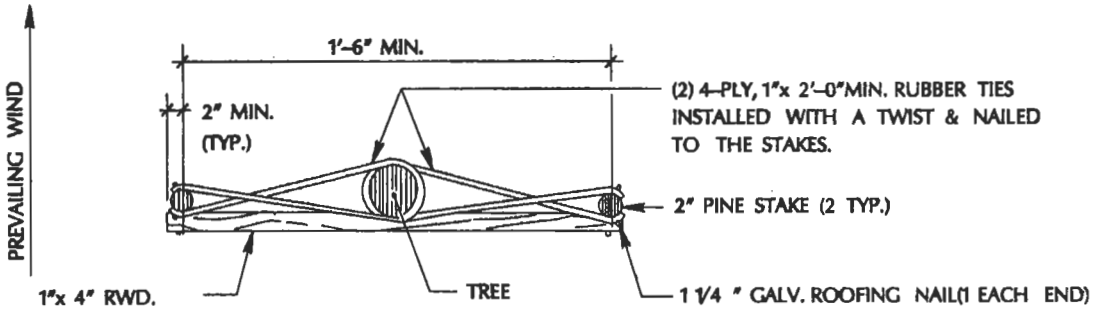

1 GAL.	2 TABLETS
2 OR 5 GAL.	3 TABLETS
15 GAL.	6 TABLETS
24" BOX	10 TABLETS

FERTILIZER

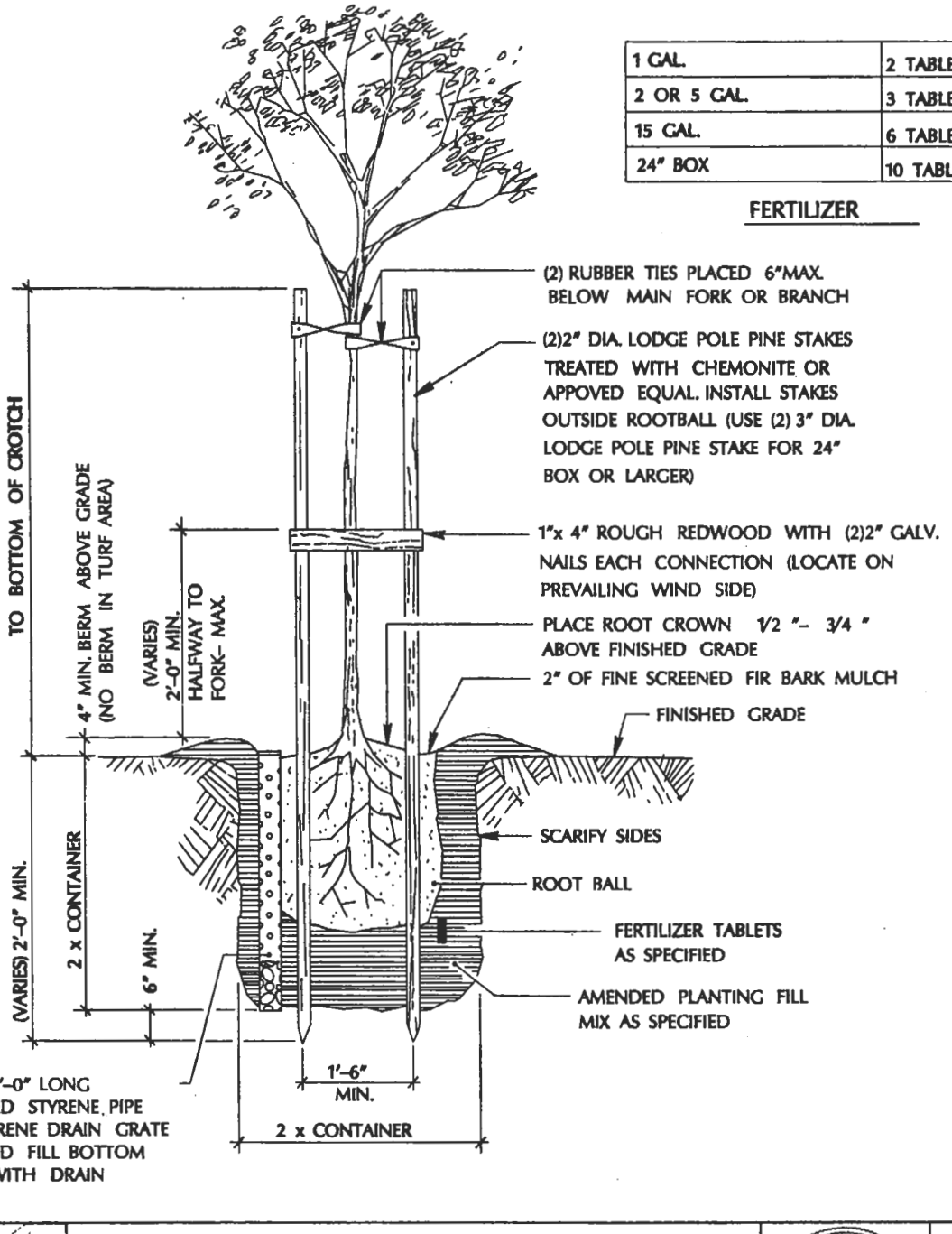

APPROVED BY	STANDARD TREE PLANTING & STAKING DETAIL		DRAWING NO.
DATE 4/3/92	DEPARTMENT OF PUBLIC WORKS	CITY OF SAN JOSE CALIFORNIA	L-14