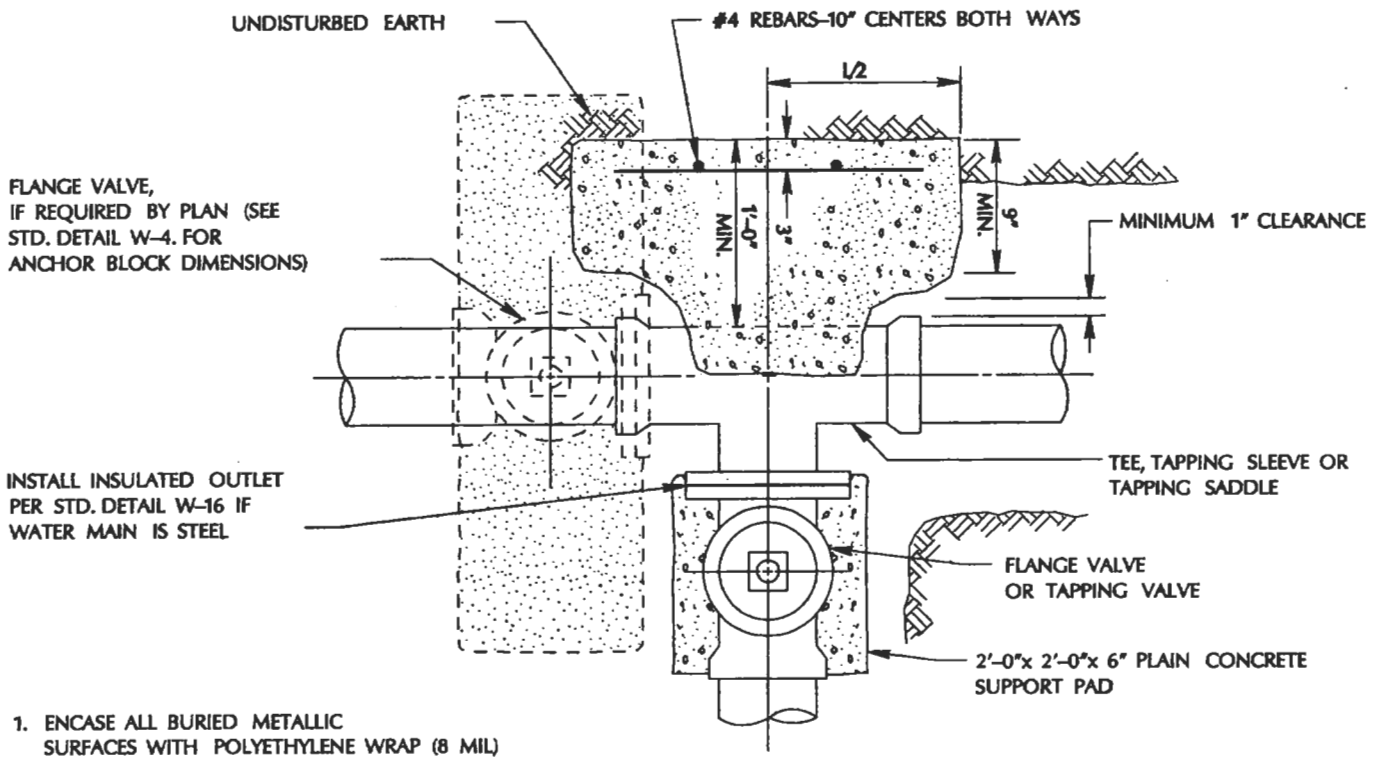

NOTES:

1. ENCASE ALL BURIED METALLIC SURFACES WITH POLYETHYLENE WRAP (8 MIL) AS SPECIFIED IN AWWA C105.
2. FLANGES, BOLTS, & NUTS SHALL BE KEPT CLEAR OF CONCRETE
3. AT ALL TEE CONNECTIONS, VALVES SHALL BE FLANGED BY HUB, BOLTED TO TEE

BRANCH PIPE SIZE	L x H	
	200 PSI TEST	250 PSI TEST
3" OR 4"	1'5" x 1'5"	1'7" x 1'7"
6"	1'9" x 1'9"	2'0" x 2'0"
8"	2'3" x 2'3"	2'6" x 2'6"
10"	3'0" x 3'0"	3'6" x 3'6"
12"	3'10" x 3'10"	4'4" x 4'4"
18"	5'10" x 5'10"	6'6" x 6'6"

APPROVED BY
DATE 4-2-96

DEPARTMENT OF PUBLIC WORKS

TEE THRUST BLOCK

DRAWING NO. W–6