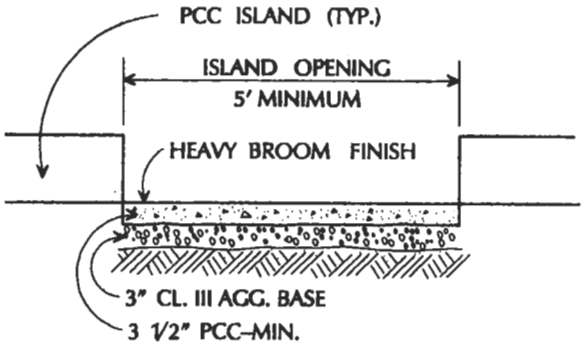


CONCRETE BAND ON-GRADE DETAIL

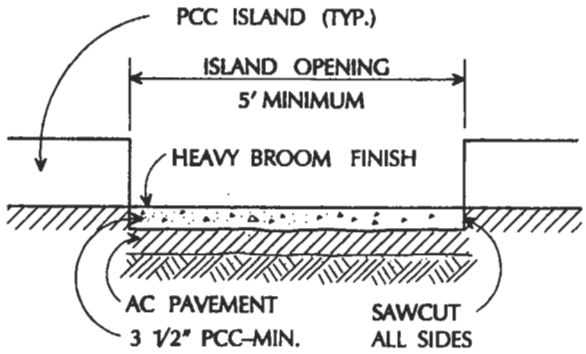


CONCRETE BAND ON EXISTING AC DETAIL

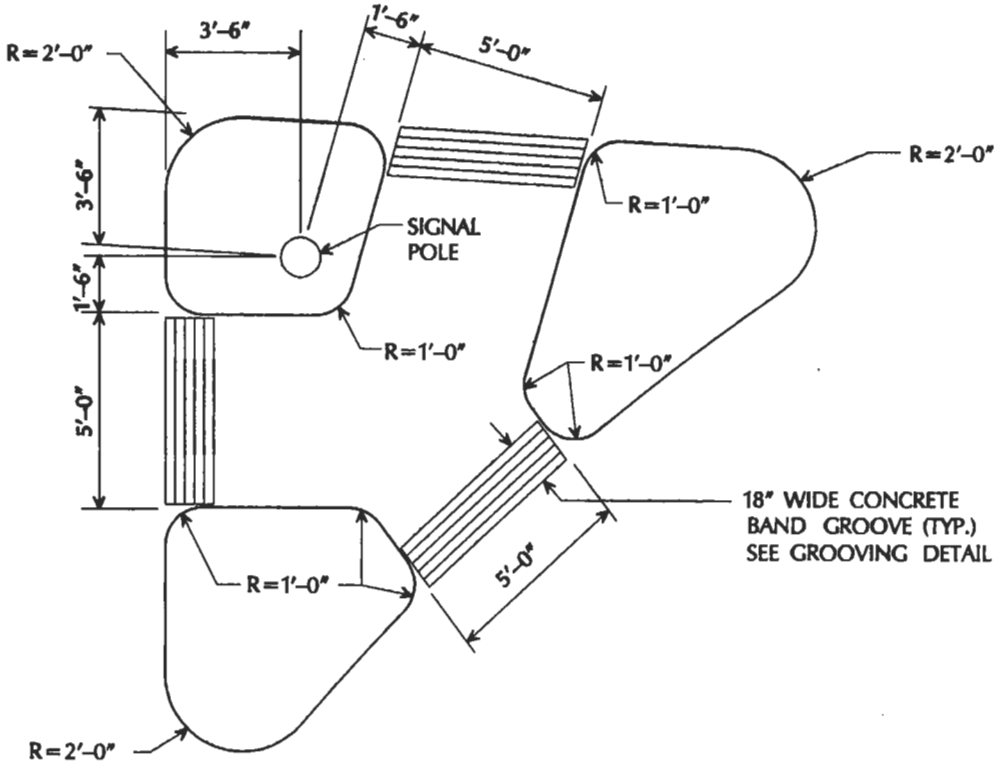


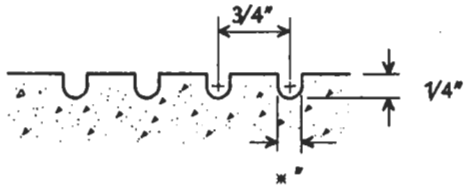


GROOVING DETAIL

| APPROVED BY | TRAFFIC ISLAND WALKWAY DETAIL | | DRAWING NO. |
|---|---|---|---|
| DATE 4/10/12 | DEPARTMENT OF PUBLIC WORKS | CITY OF SAN JOSE CALIFORNIA | R-12 |