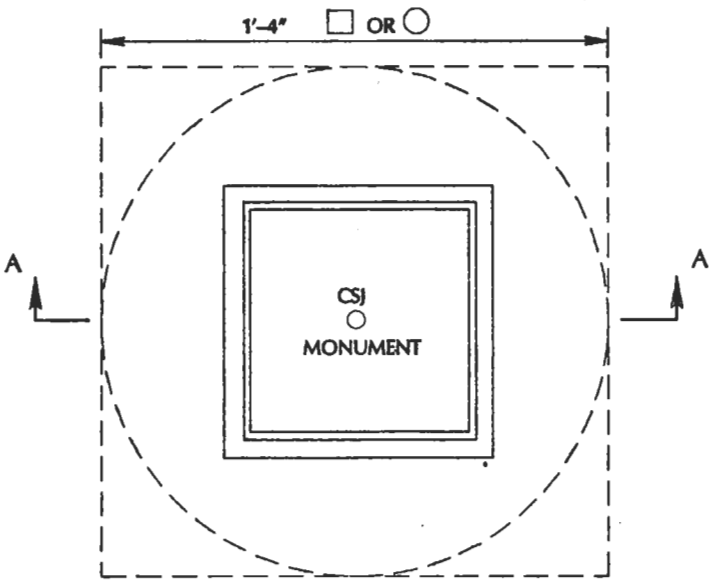

COVER INSTALLATION
PLAN VIEW

NOTES:

1. TYPE IIB BOX SHALL BE USED FOR OVERLAYS OVER 3 1/2" ABOVE INITIAL ROADWAY SURFACE.
2. IF OVERLAY IS 1 1/2" TO 1 3/4" THEN EPOXY CEMENT SHALL BE USED TO SECURE THE BOX TO THE PAVEMENT SURFACE.

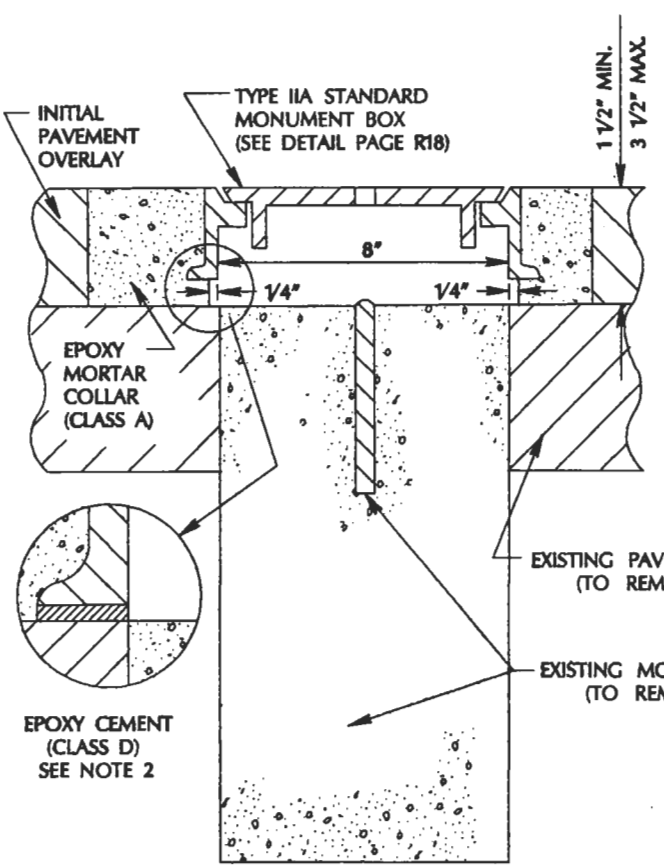

SECTION A–A
INITIAL OVERLAY

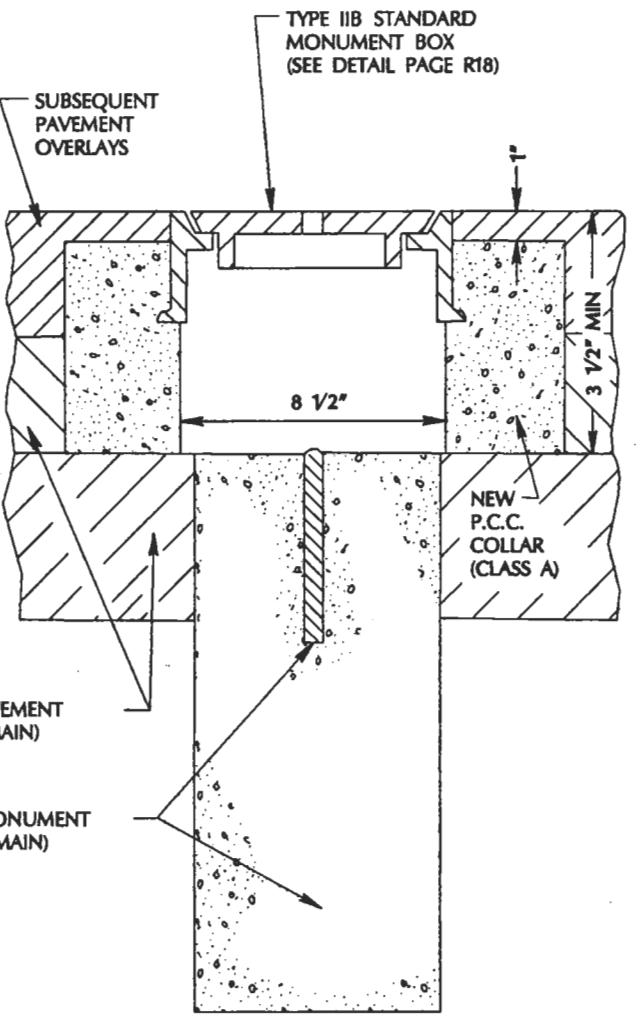

SECTION A–A
SUBSEQUENT OVERLAYS

APPROVED BY	TYPE II STANDARD MONUMENT BOX INSTALLATION/ADJUSTMENT DETAIL		DRAWING NO.
JDM		CITY OF SAN JOSE CALIFORNIA	R–17
DATE 4/10/92	DEPARTMENT OF PUBLIC WORKS		