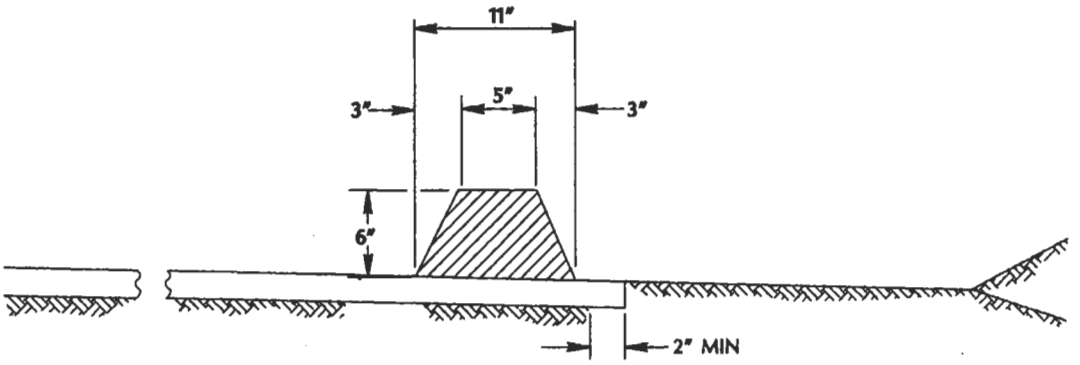

TYPE A

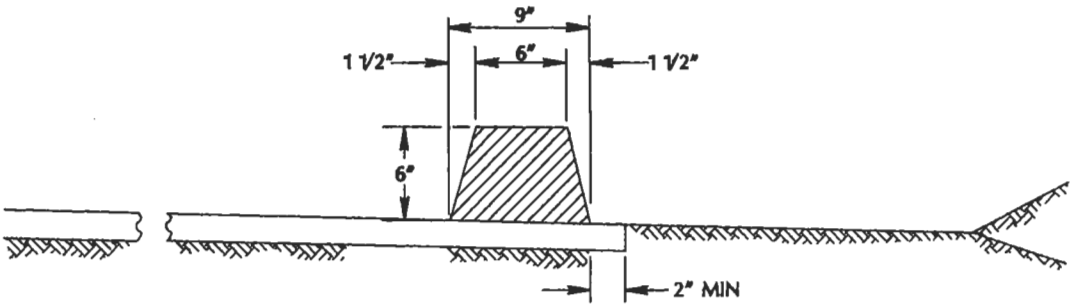

TYPE B

APPROVED BY	ASPHALT CONCRETE DIKE/BERM		DRAWING NO.
DATE 4/10/92	DEPARTMENT OF PUBLIC WORKS	CITY OF SAN JOSE CALIFORNIA	R-19