FEHR PEERS

MEMORANDUM

Date: February 28, 2019

To: Jill Quillin, ERM

From: Dan Rubins, Fehr & Peers

Subject: Recology Silicon Valley – Trip Generation and Distribution, Site Vehicle Circulation, Queuing, Parking, and Driveway Truck Turning Analysis

SJ18-1803

This memorandum summarizes the results of the focused traffic assessment for Recology Silicon Valley's solid waste, recycling and organics collections facility located at 1675 Rogers Avenue in San José, California. The project is the proposed increase in facility processing capacity from 99 tons per day to 500 tons per day, which will result in an increase of the number of trucks entering and exiting the site and on streets near the facility.

The project site is located within the North San José (NSJ) Area Development Policy boundaries. Thus, the proposed project's industrial square footage was included as a part of the traffic analysis and environmental documentation prepared for the NSJ Development Policy.

This memorandum focuses on trip generation, trip distribution and trip assignment estimates for the proposed processing capacity increase, and a site vehicle circulation, parking, and queuing review.

TRIP GENERATION

The amount of traffic generated by the increase in processing capacity was estimated by first developing Recology truck trip generation rates based on the counted number of Recology trucks entering and exiting the site compared to the existing processing capacity. These rates were then applied to the capacity increase to estimate the amount of added Recology truck traffic. In addition, other Recology related vehicle trip information, such as number of employee and customer/vendor vehicle trips, were obtained from the project applicant.

Trip Generation Rates

When evaluating traffic conditions, analysts study the time periods when traffic volumes are highest, known as the "peak hours". Two kinds of peak hours were studied in this analysis: (1) peak hours of adjacent streets and (2) peak hours of the facility (Recology). The peak hours of the adjacent streets generally correspond with the morning and evening commute periods, also called the AM Peak Hour and PM Peak Hour. These peak hours usually fall between 7:00 am to 9:00 am in the morning and 4:00 pm to 6:00 pm in the evening, and are determined using volumes of all vehicle types (Recology and non-Recology vehicles) along Rogers Avenue near the project site. However, since Recology Silicon Valley currently ends operations at 2:00 pm, the PM Peak Hour does not include Recology trips under Existing Conditions.

The second type of peak hour is the Peak Hour of Facility. This corresponds to the hours when the use reaches its highest traffic generation, even if they occur outside of the commute periods. For Recology Silicon Valley, its peak hours are 4:45 to 5:45 am and 11:15 am to 12:15 pm. These peak hours are based on existing site operations information provided by Recology staff and confirmed with counts at the driveways.

Recology truck trip generation rates were developed for the Morning Peak Hour of Facility, AM Peak Hour of the adjacent streets, and Midday Peak Hour of the Facility as shown in **Table 1**. The trip rates are expressed as truck trips per daily processing ton and are based on vehicle counts (see **Attachment A**) collected at the project site's driveways (see *On-Site Vehicle Circulation* section of this Memorandum*)* and the existing facility's processing capacity of 99 tons per day. The counts were conducted on Tuesday, March 27th and Wednesday, March 28th, 2018 and the two-day results were averaged. (The third site driveway near the southern edge of the parcel is closed, and therefore was not included in the counts.)

The counts were collected from 4:00 am to 6:00 pm to ensure both the adjacent street peak hour and facility peak hour traffic was captured. Recology trucks were counted separately from other vehicles such as East Bay Tire Company trucks that share the same address and driveways.

TABLE 1: RECOLOGY SILICON VALLEY TRUCK TRIP RATES (TRUCKS PER DAILY PROCESSING TON)

Item	Morning Peak Hour of Facility[1] (4:45 am to 5:45 am)			AM Peak Hour of Adjacent Streets[1] (7:45 am to 8:45 am)			Midday Peak Hour of Facility[1] (11:15 am to 12:15 pm)		
	In	Out	Total	In	Out	Total	In	Out	Total
Truck Trips	5	4	9	1	0	1	4	3	7
Trip Rates	0.05	0.03	0.08	0.01	0.00	0.01	0.04	0.03	0.07

Notes:
1. Trips values represent number of Recology trucks.
2. Trip rate values rounded to the nearest one hundredth decimal.
Source: Fehr & Peers, February 2019.

Trip Generation Estimates

Using the rates in **Table 1**, the proposed project's truck trip generation estimates were calculated using the proposed processing capacity of 500 tons per day. **Table 2** presents Recology Silicon Valley's vehicle trip generation for Project Conditions, Existing Conditions, and the amount of net-added traffic. This table also presents 'Other Recology Vehicles' including employee, customer, and vendor vehicle trips.

'Other Recology Vehicles' trips were determined using information from **Table 1** and **Table 4** of the Project description document titled '*PROJECT DESCRIPTION Rogers Avenue Transfer Station San José, California*' dated September 2018 and updated January 2019 provided by ERM-West, Inc. These tables present the number of employee, customer, and vendor vehicle trips for the existing Recology Silicon Valley site and the proposed project. In **Table 2**, 'Recology Trucks' represent Recology's collection and transfer vehicle trips. 'Office Employee Vehicles' are the passenger vehicles trips of Recology's office employees. These trip rates are greater than the average office vehicle trip rates on a per employee basis from the Institute of Transportation Engineers (ITE land use code 710; offices in general urban/suburban locations from the *Trip Generation Manual 10th Edition*) shown in **Attachment B.** 'Other Recology Vehicles' are the vehicle trips generated Recology mechanics, loader operators, operations manager, and support specialists, as well as delivery, customer and vendor vehicle trips.

The project description also includes information on the increase in facility staff (office workers and mechanics) and drivers (drivers of collection vehicles). Due to the expanded facility operations, the number of facility staff will increase by approximately 30 employees, and the number of collection vehicle drivers will increase by 80.

TABLE 2: RECOLOGY SILICON VALLEY TRIP GENERATION

Scenario and Item	Facility Processing Capacity (Tons)	Morning Peak Hour of Generator (4:45 am to 5:45 am)				AM Peak Hour of Adjacent Streets (7:45 am to 8:45 am)				Midday Peak Hour of Generator (11:15 am to 12:15 pm)				PM Peak Hour of Adjacent Streets (3:30 pm to 4:30 pm)			
		Trip Rate[1]	In	Out	Total	Trip Rate[1]	In	Out	Total	Trip Rate[1]	In	Out	Total	Trip Rate[1]	In	Out	Total
Project Conditions																	
Recology Trucks	500	0.08	23	18	41	0.01	5	0	5	0.07	18	15	33	0.00	0	0	0
Office Employee Vehicles[2]		0.00	0	0	0	0.07	37	0	37	0.00	0	0	0	0.07	0	37	37
Other Recology Vehicles[2]		0.05	24	0	24	0.01	3	3	6	0.10	24	24	48	0.01	3	3	6
Project Conditions Total		*0.13*	*47*	*18*	*65*	*0.09*	*45*	*3*	*48*	*0.16*	*42*	*39*	*81*	*0.08*	*3*	*40*	*43*
Existing Conditions																	
Recology Trucks	99	0.08	5	4	9	0.01	1	0	1	0.07	4	3	7	0.00	0	0	0
Office Employee Vehicles[2]		0.00	0	0	0	0.25	25	0	25	0.00	0	0	0	0.25	25	0	25
Other Recology Vehicles[2]		0.02	2	0	2	0.02	1	1	2	0.00	0	0	0	0.02	1	1	2
Existing Conditions Total		*0.11*	*7*	*4*	*11*	*0.28*	*27*	*1*	*28*	*0.07*	*4*	*3*	*7*	*0.27*	*26*	*1*	*27*
Net New Trips (Project-Existing)			**40**	**14**	**54**		**18**	**2**	**20**		**38**	**36**	**74**		**2**	**14**	**16**

Notes:

1. Trip Rates are in units of Vehicle Trips per Processing Capacity (tons).
2. Existing office employee operations includes 25 employees per project description provided by ERM-West, Inc. (January 2019).
3. 'Other' Recology Vehicles' include Recology employee vehicles such as mechanics, loader operator, operations manager, support specialists, as well as customer and vendor vehicle trips and deliveries.
4. Trip values are rounded in this table for presentation purposes.

Source: Fehr & Peers, February 2019.

Although the project description states that office employees arrive around 7:00 am and depart around 5:00 pm, their trips are included in the AM Peak Hour of Adjacent Streets (7:45 am to 8:45 am) and PM Peak Hour of Adjacent Streets (3:30 pm to 4:30 pm) to present a conservative analysis. City of San José's PM Peak Hour extents are from 4:00 to 6:00 pm. However, hourly vehicle volumes on Rogers Avenue during this time period are lower than during the peak hour at 3:30 pm, and therefore 3:30 pm volumes on Rogers Avenue were used for this analysis. Some vehicle trips included in **Table 4** of the Project description occur outside of the studied peak hours (such as trips at the end of the PM shift at around 9:30 pm) and are not included in **Table 2**.

The proposed facility's processing capacity increase will result in 54 net new trips during the morning peak hour of facility (4:45 am to 5:45 am), 20 net new trips during the AM peak hour of adjacent streets (7:45 am to 8:45 am), 74 net new trips during the midday peak hour of facility (11:15 am to 12:15 pm), and 16 net new trips during the PM peak hour of adjacent streets (3:30 pm to 4:30 pm). With only 20 trips being added to the street network during the AM peak hour of adjacent streets and 16 during the PM peak hour of adjacent streets, Fehr & Peers does not anticipate a need for further analysis of the proposed facility's processing capacity increase. Furthermore, the 54 net new trips during the morning peak hour of the facility and 74 net new trips during the midday peak hour of the facility are not anticipated to disrupt the surrounding transportation network considering the low number of new trips and that they occur during time periods when local traffic volumes are low.

TRIP DISTRIBUTION AND ASSIGNMENT

The Recology Collections Facility sends and receives trucks to/from Mountain View, Cupertino, Santa Clara, and San José. In addition, some Recology trucks transfer materials to/from Newby Island in Milpitas. The distribution of Recology trucks on surrounding roadways as they travel to and from these areas is presented on **Figure 1**.

Of the Recology trucks entering/exiting the collections facility, 95 percent use Rogers Avenue to the south to US-101 and I-880. The remaining 5 percent use Rogers Avenue to the north towards Brokaw Road. **Figures 2** and **3** present the Recology truck trip assignment for Existing Conditions and Project Conditions, respectively, displaying the Recology truck volumes at the intersections of Queens Lane / Old Bayshore Highway, and Rogers Avenue / E. Brokaw Road.

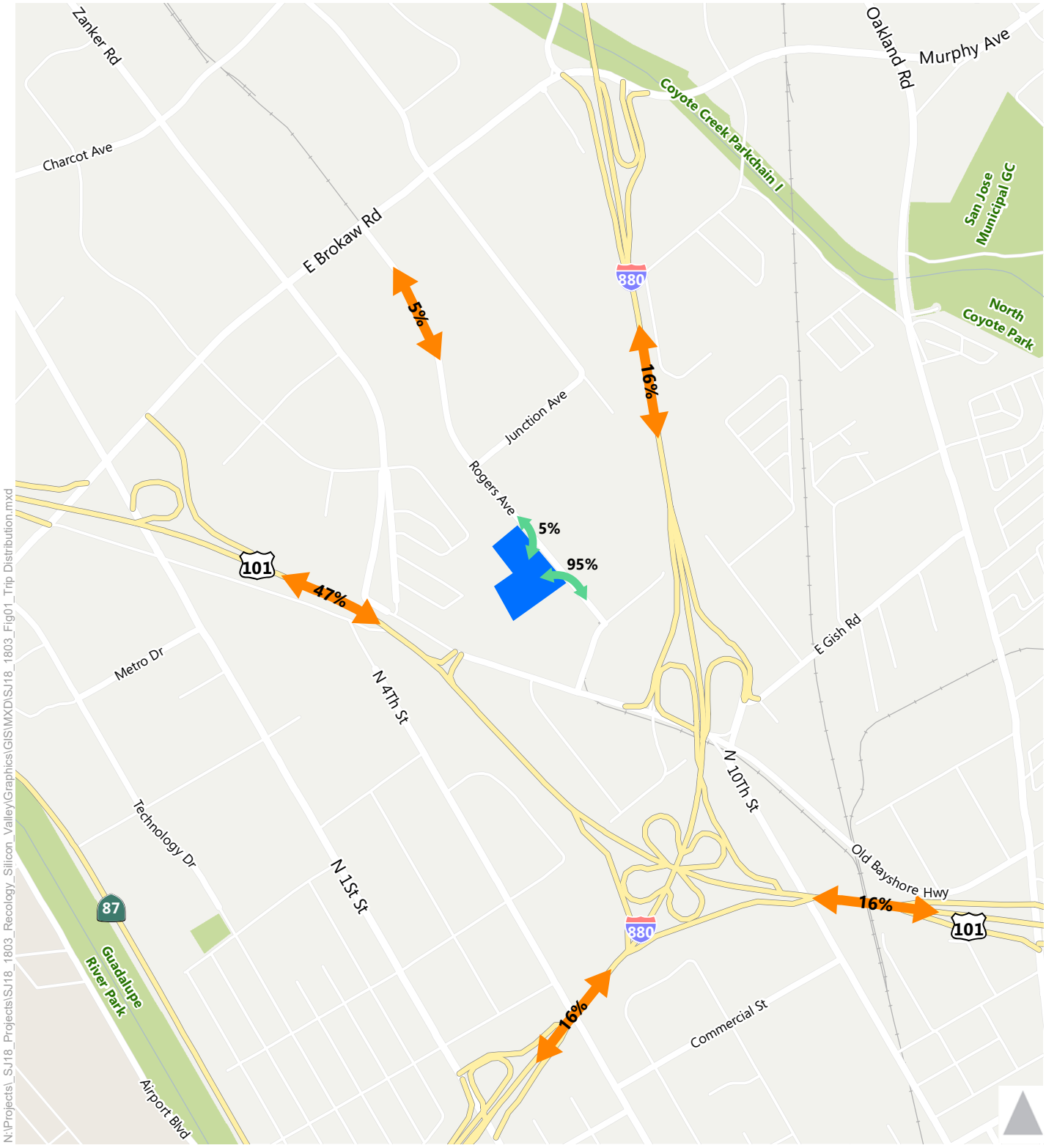

N:\Projects_SJ18_Projects\SJ18_1803_Recology_Silicon_Valley\Graphics\GIS\MXD\SJ18_1803_Fig01_Trip Distribution.mxd

Trip Distribution

% on Surrounding Roadways

% on Rogers Avenue

Project Site

Figure 1

Recology Truck Trip Distribution

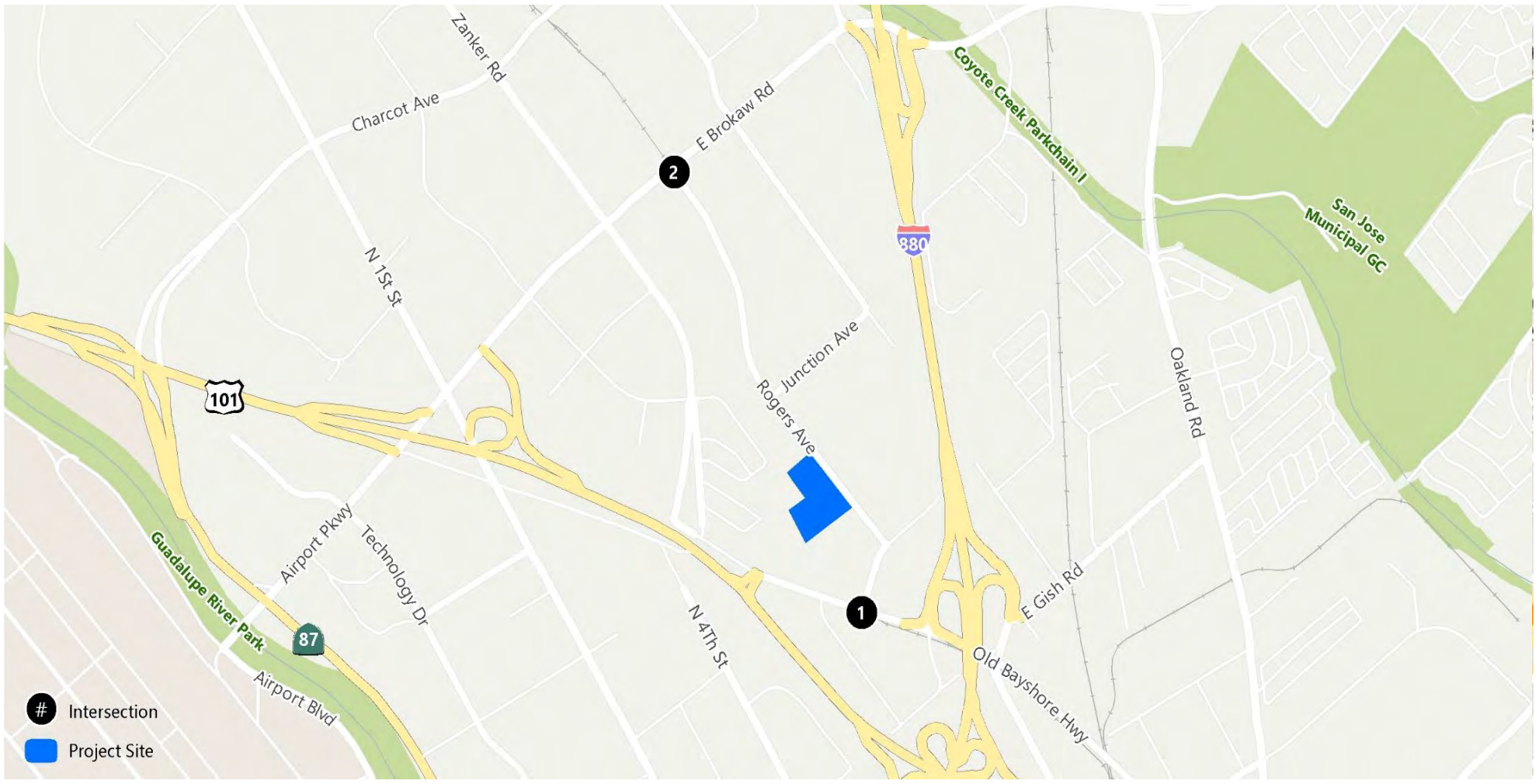

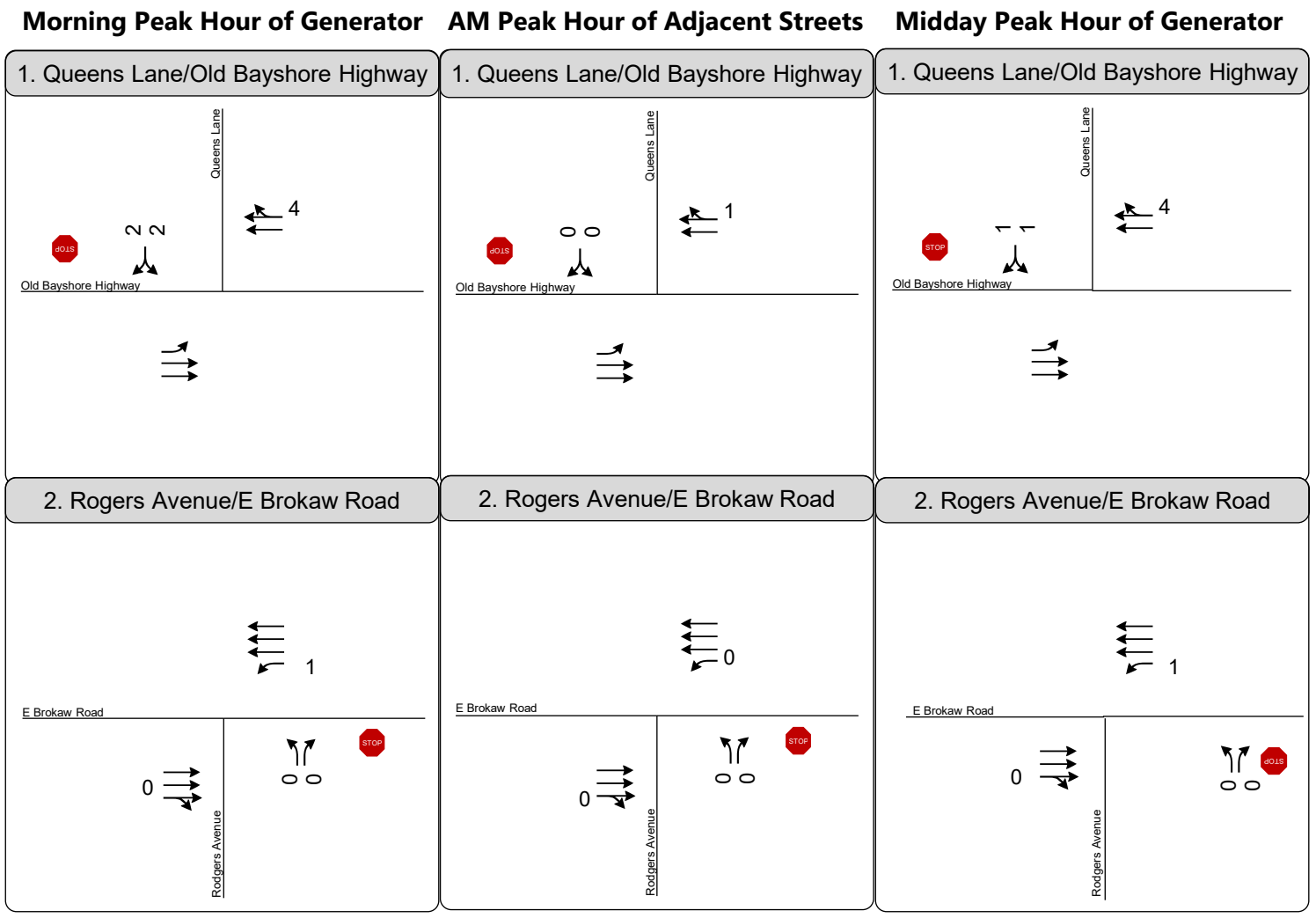

Figure 2

Peak Hour Recology Truck Volumes and Lane Configurations Existing Conditions

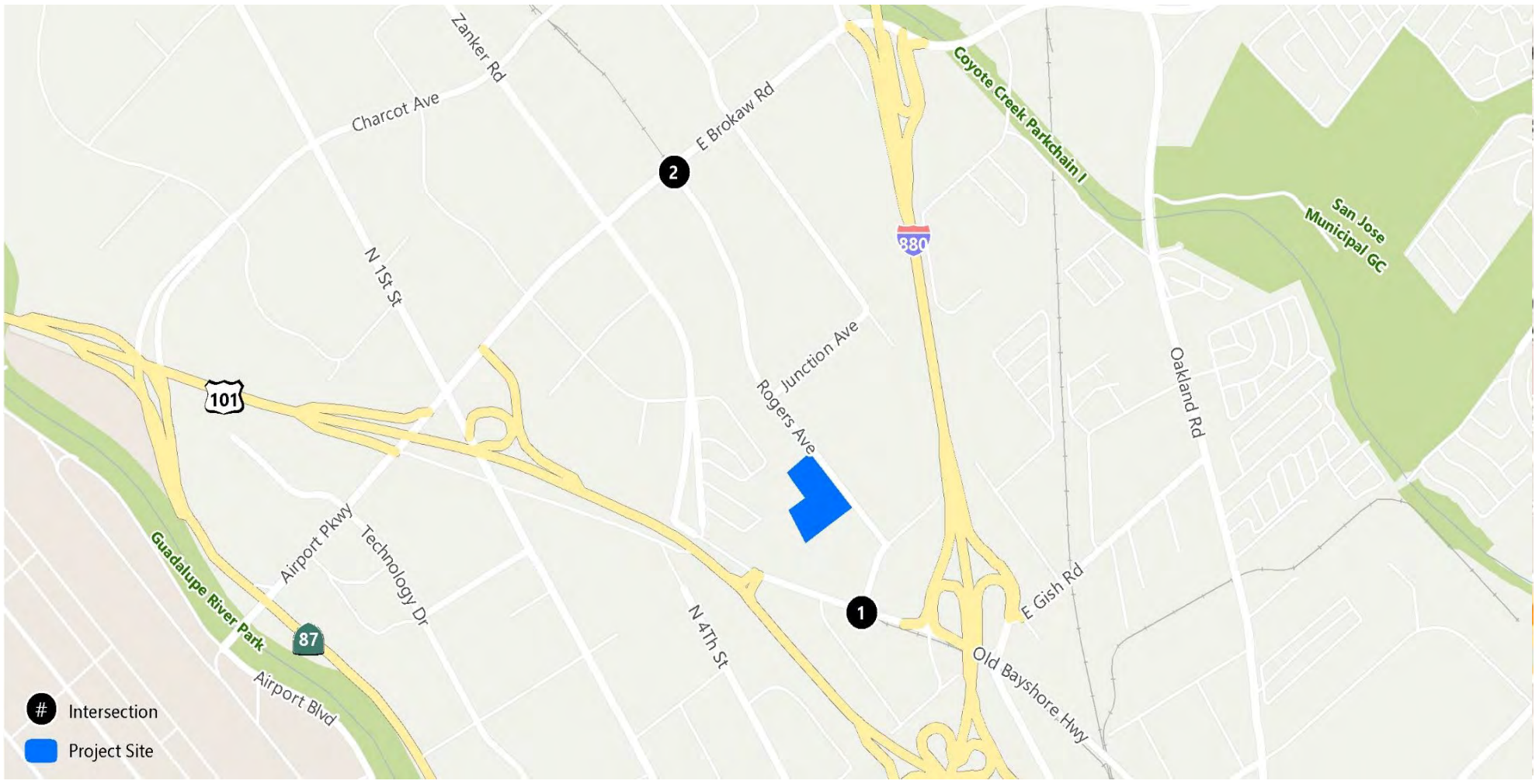

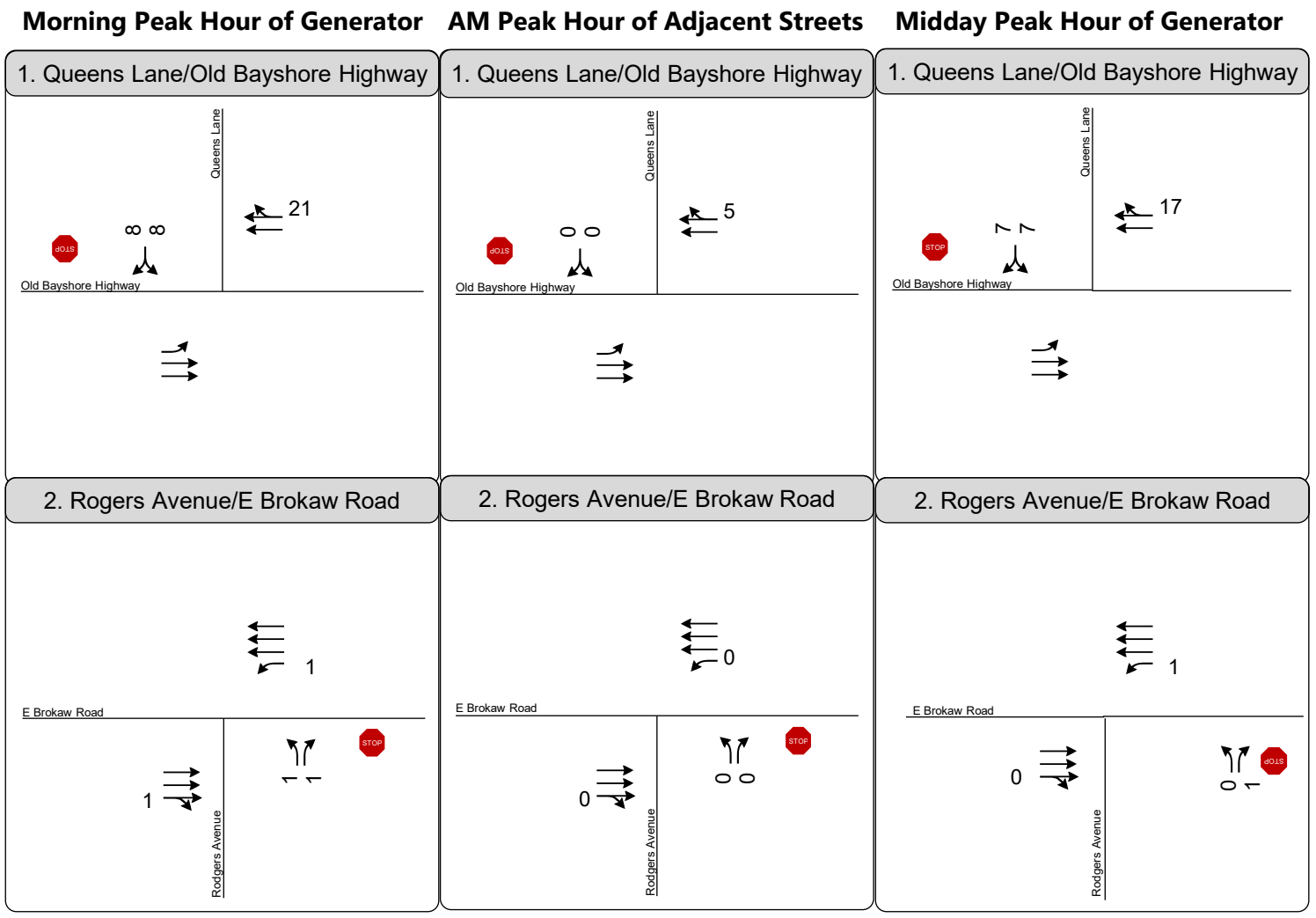

Figure 3

Peak Hour Recology Truck Volumes and Lane Configurations Project Conditions

SITE VEHICLE CIRCULATION, QUEUING, AND PARKING

Fehr & Peers staff conducted on-site field observations on Tuesday, March 27th during the morning peak hour of facility, midday peak hour of facility, and PM Peak hour of adjacent streets. Staff observed the on-site Recology truck vehicle circulation as well as any Recology truck queues.

Recology Site Day-to-Day Operations

The Recology Silicon Valley site currently operates from 4:00 am to 2:00 pm. The general procedure for processing a truck is as follows:

- Recology trucks enter the project site and immediately weigh in using the on-site truck scale. This process takes one minute on average.
- After weighing in, trucks enter the Recology collections facility and begin loading/unloading materials. This process takes 10 minutes on average and multiple trucks can be accommodated at the same time.
- After loading/unloading materials at the collections facility, trucks record their weight using the scale on the way out of the project site before departing. This process takes one minute on average.

On average, a Recology truck takes a total of 12 minutes to be processed. This includes time required for trucks to enter and exit the facility. During every 12-minute cycle, the maximum number of trucks that are processed in the facility (load/unload materials at the transfer station building) at one time is three. In most cases, only one or two trucks are processed simultaneously, but three is possible.

On-Site Vehicle Circulation

As presented on **Figure 4**, Recology trucks enter the site via the southern driveway, weigh in at the truck scale, and enter the Recology collections facility. Trucks use the same path to exit the project site, stopping at the scale to record their weight on the way. Recology trucks were observed to enter and exit the site using the same driveway (labeled driveway #2 on **Figure 4**). Although the trucks observed during peak hours used the southern driveway, trucks are also allowed to use the northern driveway (labeled driveway #1 on **Figure 4**). Most trucks use the southern driveway because it is a direct route to the truck scale and transfer building station.

The project site (see **Attachment C**) includes three truck scales; one along the southern driveway and the other two just east of the transfer building station. Although there are three total truck scales on the site plan, only the truck scale currently in operation today will be used in the future.

The Recology trucks that enter and exit the project site consist of single trailer 5-axle trucks and single unit 3-axle trucks. The dimensions of these trucks are 8 feet by 45.5 feet, and 12 feet by 32 feet, respectively. Images of these truck types are included as **Attachment D** of this memorandum. Truck turning templates are included in **Attachment E**.

Queuing

No vehicle queues were observed on Rogers Avenue during the morning or afternoon peak hours. However, on-site at the truck scale, no more than one truck was observed waiting to use the truck scale during the morning peak hour (one truck on the scale plus one waiting to use the truck scale). No vehicle queues were observed during the peak hours on Rogers Avenue nor on the project site.

Under Project Conditions, Recology truck queues for the truck scales will lengthen from a maximum of one truck waiting for the scale to two trucks waiting for the scale. This increase in vehicle queue[1] is for the maximum 23 inbound morning peak hour vehicles (AM Peak Hour of Generator) and based on information from Recology that describes the processing rate of a scale as 60 trucks per hour (1 minute on the scale per truck). The estimated maximum queue length is 3 Recology trucks with a queue length of approximately 160 feet (assumes a total truck length of 45.5 feet per truck and a 10-foot gap between trucks)[2]. The reported queue includes one vehicle on the scale and two waiting for the scale. The distance between the scale and Rogers street is approximately 245 feet. Therefore, the truck vehicle queue to use the scale will be contained on the project site.

On-Site Parking

The existing project site includes parking along the north and south edge of the project site, as well as adjacent to the processing building and the office building. The proposed project will keep this parking. According to San José Municipal Code the required on-site parking is 1 vehicle parking space per 250 square feet of office, 1 vehicle parking spaces per facility vehicle, and 1 vehicle parking space per employee of the largest shift.

Table 3 presents the amount of vehicle parking needed per the City of San José Municipal Code. The current parking supply is three spaces short of the required minimum parking supply per the San José Municipal Code. This deficit in parking is due to a 15% reduction in parking supply as

---

[1] The vehicle queue analysis assumes that Recology trucks have a random arrival. A Poisson distribution is used to represent a random arrival of vehicles within the peak hour. This pattern was observed during peak hour field observations, where trucks arrived at what seemed to be random intervals with no consistency in time between truck arrivals.

[2] *45.5 feet equals the total length of a Recology transfer trailer truck (Recology's longest truck)*

noted on sheet 2 of **Attachment C**. The project applicant should confirm that this parking space reduction is acceptable to City staff.

TABLE 3: VEHICLE PARKING SUPPLY

Criteria	Project Size[1]	Required Minimum Parking Supply Rate[2]	Required Minimum Parking Supply[2]	Proposed Parking Supply
Office Land Use				
Office	6,480 square feet	1 space per 250 square feet	26 spaces	25 spaces
Transfer Facility Land Use				
Facility Vehicles	92 vehicles	1 space per facility vehicle	92 spaces	90 spaces
Employees of the Largest Shift	8 employees	1 space per employee of the largest shift	8 spaces	8 spaces
Total			**126 spaces**	**123 spaces**

Notes:

1. Project size information based on sheet 2 of the proposed site plan on **Attachment C**.
2. Minimum parking supply rates based on Table 20-190 *Parking Spaces Required by Land Use* of the *San* José *Municipal Code* chapter 20.90 section 060.

Source: Fehr & Peers, February 2019.

Bicycle Parking

Table 4 presents the results of the bicycle parking assessment. The current bicycle parking supply (3 spaces) satisfies the minimum bicycle parking requirements (3 spaces) per the San José Municipal Code. Based on the San José Municipal Code section 20.90.060 clause B3, two of the spaces should be short-term bicycle parking and one should be long-term bicycle parking.

TABLE 4: BICYCLE PARKING SUPPLY

Criteria	Project Size[1]	Required Minimum Parking Supply Rate[2]	Required Minimum Parking Supply[2]	Proposed Parking Supply
		Office Land Use		
Office	6,480 square feet	1 space per 4000 square feet	2 spaces	2 spaces
		Transfer Facility Land Use		
Transfer Facility	8 employees	1 space per 10 full-time employees	1 space	1 space
	Total		**3 spaces**	**3 spaces**

Notes:
1. Project size information based on sheet 2 of the proposed site plan on **Attachment C**.
2. Minimum parking supply rates based on Table 20-190 *Parking Spaces Required by Land Use* of the *San José Municipal Code* chapter 20.90 section 060.

Source: Fehr & Peers, February 2019.

Site Access

Based on field observations and conversations with the project applicant, Recreational Vehicles (RVs) park along Rogers Avenue's west side curb. These RVs are tall and if parked too close to the project driveways block the view of exiting Recology trucks and passenger vehicles at the southern driveway (labeled driveway #2 on **Figure 4**). For this reason, Fehr & Peers recommends the project applicant coordinate with the City of San José to restrict vehicle height, for vehicles parking along the project site's curb, to a maximum of 6 feet.

Driveway Truck Turning Analysis

Truck turning templates were created using AutoTurn software for the two Recology truck types listed below.

- Recology Transfer Trailer Truck: Single Trailer 5-Axle Truck (8 feet by 45.5 feet)
- Recology Collection Truck: Single Unit 3-Axle Truck (12 feet by 32 feet)

The templates illustrate the paths and the amount of space used by each truck type as they turn right and left into and out of each of the two project site driveways (driveways number 1 and 2 on **Figure 4**). They are included as **Attachment E.**

As shown on **Attachment E**, the collection trucks are able to turn into and out of the project site driveways without encroaching onto the sidewalk curbs nor the solid yellow striping on the edge

of the railroad tracks. The path of a collection truck entering the site could cross with the path of a collection truck exiting the same driveway. There is enough room on-site for these trucks to wait and maneuver around each other to accommodate simultaneous movements of the projected truck volumes.

The transfer trailer trucks may have to slightly cross the solid yellow striping while turning right into and out of the driveways due to the trailer length. In order for the transfer trailer truck to conduct this turn, the following would have to occur:

- When turning right into and out of the project site driveways, transfer trailer trucks may use a side overturn (merge left into the opposite lane or over the railroad tracks just before turning right). This allows the trucks to complete the right-turn without encroaching onto the sidewalk curbs as they enter/exit the site and minimizes the extent to which they cross the solid yellow striping along the railroad track. Given the driveway's low inbound vehicle volume and the industrial setting, it would be acceptable for the transfer trailer trucks to occupy a majority of the driveway as they exit.

Rogers Avenue Re-Striping

The City of San José recently completed striping and signing work along Rogers Avenue near the project site. Yellow striping was added on both sides of the railroad track to provide the necessary railroad clearance (see **Attachment F** for striping and signage plans). Vehicles are allowed to cross the single yellow lane striping when making left turns into and out of the driveways, but should not cross the yellow striping when making right turns. By using a side overturn, Recology's single trailer 5-axle trucks minimize the extent of which they cross the yellow striping when conducting right turns into and out of the driveways.

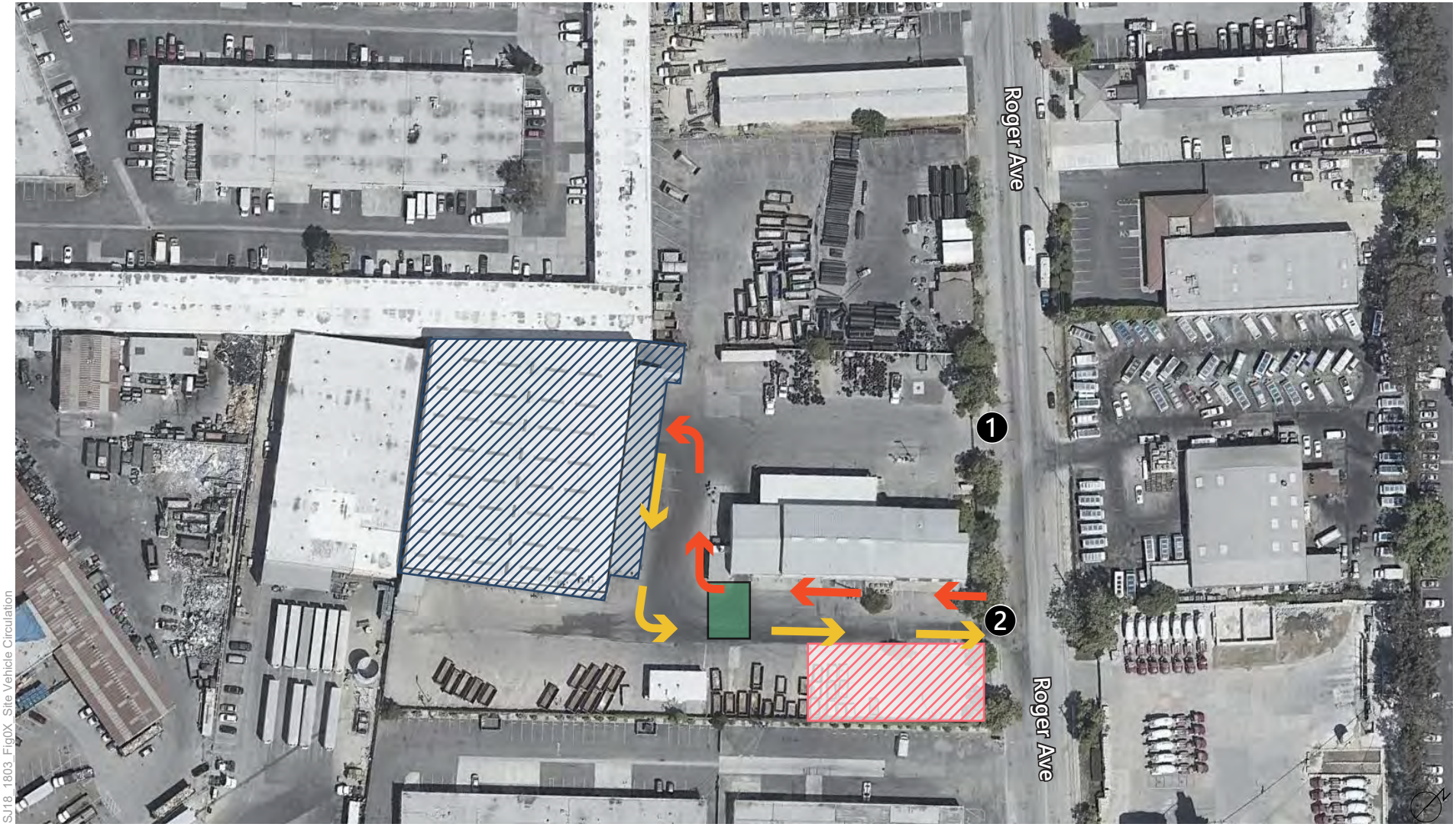

Employee Parking

Recology Collections Facility

Truck Scale

Inbound Recology Truck Route

Outbound Recology Truck Route

Data Collection Locations

Figure 4

Site Vehicle Circulation

CONCLUSIONS

In conclusion, the Recology Silicon Valley materials processing facility currently generates 11 trips during the morning peak hour of facility, 28 trips during the AM peak hour of adjacent streets, 7 trips during the midday peak hour of the facility, and 27 trips during the PM peak hour of adjacent streets. By increasing the facility's processing capacity from 99 tons per day to 500 tons per day, 54 net new morning peak hour of the facility trips are generated, 20 net new trips during the AM peak hour of adjacent streets, 74 net-new trips during the midday peak hour of the facility, and 16 net-new trips during the PM peak hour of adjacent streets. With only 20 trips being added to the street network during the AM peak hour of adjacent streets and 16 during the PM peak hour of adjacent streets, Fehr & Peers does not anticipate a need for further analysis of the proposed facility's processing capacity increase. Furthermore, the 54 net new trips during the morning peak hour of the facility and 74 net new trips during the midday peak hour of the facility are not anticipated to disrupt the surrounding transportation network considering the low number of new trips and that they occur during time periods when local traffic volumes are low.

In addition, no vehicle queues were observed along Rogers Avenue during in-person field visits. Under Project Conditions, Recology truck queues for the truck scales will lengthen from a maximum of one truck waiting for the scale to two trucks waiting for the scale. The estimated maximum queue length is 3 Recology trucks with a queue length of approximately 160 feet. The reported queue includes one vehicle on the scale and two waiting for the scale. The distance between the scale and Rogers Avenue is approximately 245 feet. Therefore, the truck vehicle queue to use the scale will remain on the project site.

Regarding curb space along Rogers Avenue adjacent to the Recology project site; Fehr & Peers recommends the project applicant coordinate with the City of San José to restrict vehicle height for vehicles parking along the project site's curb, to a maximum of 6 feet. This will prevent tall vehicles such as RVs from blocking the view of exiting Recology trucks and passenger vehicles at the southern driveway.

Lastly, as shown on **Attachment E**, the collection trucks are able to turn into and out of the project site driveways without encroaching onto the sidewalk curbs nor the solid yellow striping on the edge of the railroad tracks. The transfer trailer trucks may have to slightly cross the solid yellow striping while turning right into and out of the driveways due to the trailer length.

ATTACHMENTS

Attachment A: Vehicle Turning Movement Counts

Attachment B: Office Trip Rate Comparison

Attachment C: Project Site Plan

Attachment D: Recology Truck Types

Attachment E: Truck Turning Templates

Attachment F: Rogers Avenue Signing and Striping Plan

ATTACHMENT A: VEHICLE TURNING MOVEMENT COUNTS

Traffic Data Service

San Jose, CA
(408) 622-4787
tdsbay@cs.com

File Name : East Bay Tire 3-27-18 FINAL
Site Code : 00000001
Start Date : 3/27/2018
Page No : 1

Groups Printed- Lights - East Bay Tire - Recology - Heavy

	ROGERS AVE Southbound					DRIVEWAY Westbound					ROGERS AVE Northbound					EAST BAY TIRE DW Eastbound					
Start Time	Right	Thru	Left	Peds	App. Total	Right	Thru	Left	Peds	App. Total	Right	Thru	Left	Peds	App. Total	Right	Thru	Left	Peds	App. Total	Int. Total
04:00 AM	0	0	1	1	2	0	0	1	2	3	4	2	0	0	6	0	0	0	0	0	11
04:15 AM	1	3	2	0	6	3	0	4	0	7	4	9	0	0	13	0	0	0	0	0	26
04:30 AM	0	6	2	0	8	3	0	1	0	4	1	7	0	0	8	0	0	0	0	0	20
04:45 AM	0	1	1	0	2	0	0	4	0	4	6	16	0	0	22	0	0	0	0	0	28
Total	1	10	6	1	18	6	0	10	2	18	15	34	0	0	49	0	0	0	0	0	85
05:00 AM	0	10	2	0	12	1	0	2	2	5	7	15	0	0	22	2	0	0	1	3	42
05:15 AM	0	7	0	0	7	2	0	2	0	4	5	25	1	0	31	0	0	0	0	0	42
05:30 AM	0	11	0	0	11	3	0	3	0	6	2	39	1	0	42	0	0	0	0	0	59
05:45 AM	0	8	3	0	11	1	0	8	1	10	6	51	0	0	57	0	0	0	0	0	78
Total	0	36	5	0	41	7	0	15	3	25	20	130	2	0	152	2	0	0	1	3	221
06:00 AM	0	5	2	0	7	4	0	4	0	8	4	40	0	0	44	0	0	0	0	0	59
06:15 AM	0	11	2	0	13	3	0	5	0	8	1	26	1	0	28	0	0	0	1	1	50
06:30 AM	1	11	1	1	14	0	0	2	0	2	2	29	0	0	31	0	0	0	2	2	49
06:45 AM	0	26	1	0	27	1	0	2	0	3	2	39	0	0	41	0	0	0	0	0	71
Total	1	53	6	1	61	8	0	13	0	21	9	134	1	0	144	0	0	0	3	3	229
07:00 AM	0	23	2	0	25	1	0	4	0	5	1	40	0	0	41	0	0	0	0	0	71
07:15 AM	2	23	1	0	26	0	0	1	0	1	2	55	1	0	58	0	0	0	0	0	85
07:30 AM	0	14	0	0	14	0	0	4	0	4	2	40	1	0	43	0	0	0	0	0	61
07:45 AM	0	16	0	0	16	1	0	2	0	3	3	62	0	0	65	0	0	0	1	1	85
Total	2	76	3	0	81	2	0	11	0	13	8	197	2	0	207	0	0	0	1	1	302
08:00 AM	0	22	2	0	24	2	0	3	0	5	5	79	1	0	85	1	0	0	0	1	115
08:15 AM	0	18	1	0	19	4	0	6	0	10	2	79	1	0	82	0	0	0	0	0	111
08:30 AM	0	30	1	0	31	2	0	2	0	4	2	48	0	0	50	1	0	0	0	1	86
08:45 AM	0	21	0	0	21	0	0	3	0	3	4	60	0	0	64	1	0	0	1	2	90
Total	0	91	4	0	95	8	0	14	0	22	13	266	2	0	281	3	0	0	1	4	402
09:00 AM	0	30	0	0	30	0	0	1	0	1	2	64	2	0	68	0	0	1	0	1	100
09:15 AM	0	27	0	0	27	0	0	2	0	2	0	75	0	0	75	0	0	0	0	0	104
09:30 AM	0	31	1	0	32	0	0	2	0	2	4	64	0	0	68	2	0	0	1	3	105
09:45 AM	0	19	1	0	20	0	0	3	0	3	1	58	0	0	59	0	0	0	0	0	82
Total	0	107	2	0	109	0	0	8	0	8	7	261	2	0	270	2	0	1	1	4	391
10:00 AM	0	28	1	0	29	1	0	1	0	2	0	45	2	0	47	1	0	0	0	1	79
10:15 AM	1	26	1	0	28	1	0	0	0	1	1	46	2	0	49	2	0	0	0	2	80
10:30 AM	1	36	0	0	37	2	0	1	0	3	2	45	1	0	48	0	0	0	0	0	88
10:45 AM	0	23	0	0	23	1	0	1	0	2	0	43	1	0	44	0	0	1	0	1	70
Total	2	113	2	0	117	5	0	3	0	8	3	179	6	0	188	3	0	1	0	4	317
11:00 AM	2	40	0	0	42	2	0	0	0	2	2	40	0	0	42	3	0	0	0	3	89
11:15 AM	1	35	0	0	36	0	0	1	0	1	1	33	0	0	34	0	0	0	0	0	71
11:30 AM	0	25	0	0	25	0	0	0	0	0	0	29	0	0	29	0	0	0	0	0	54
11:45 AM	0	31	0	0	31	0	0	1	0	1	1	35	0	0	36	2	0	0	0	2	70
Total	3	131	0	0	134	2	0	2	0	4	4	137	0	0	141	5	0	0	0	5	284
12:00 PM	0	39	2	0	41	1	0	2	0	3	2	40	3	0	45	1	0	0	0	1	90
12:15 PM	0	34	1	1	36	1	0	1	1	3	2	26	2	0	30	0	0	0	0	0	69
12:30 PM	1	35	6	0	42	0	0	3	0	3	8	39	0	0	47	0	0	1	0	1	93
12:45 PM	0	34	3	1	38	0	0	0	0	0	3	30	0	0	33	0	0	0	0	0	71
Total	1	142	12	2	157	2	0	6	1	9	15	135	5	0	155	1	0	1	0	2	323
01:00 PM	1	29	3	0	33	1	0	1	0	2	3	39	2	0	44	1	0	2	1	4	83
01:15 PM	0	34	4	0	38	3	0	6	0	9	5	53	0	0	58	1	0	0	0	1	106
01:30 PM	1	34	2	0	37	1	0	6	0	7	2	38	1	0	41	2	0	1	0	3	88
01:45 PM	0	31	4	0	35	2	0	9	0	11	4	30	1	0	35	1	1	0	0	2	83
Total	2	128	13	0	143	7	0	22	0	29	14	160	4	0	178	5	1	3	1	10	360

Traffic Data Service

San Jose, CA
(408) 622-4787
tdsbay@cs.com

File Name : East Bay Tire 3-27-18 FINAL
Site Code : 00000001
Start Date : 3/27/2018
Page No : 2

Groups Printed- Lights - East Bay Tire - Recology - Heavy

	ROGERS AVE Southbound					DRIVEWAY Westbound					ROGERS AVE Northbound					EAST BAY TIRE DW Eastbound					
Start Time	Right	Thru	Left	Peds	App. Total	Right	Thru	Left	Peds	App. Total	Right	Thru	Left	Peds	App. Total	Right	Thru	Left	Peds	App. Total	Int. Total
02:00 PM	0	71	5	1	77	1	0	6	0	7	4	35	0	0	39	2	0	0	0	2	125
02:15 PM	0	39	2	0	41	1	0	5	0	6	2	27	1	0	30	0	0	0	0	0	77
02:30 PM	3	49	2	0	54	1	0	1	0	2	4	35	2	0	41	1	0	0	0	1	98
02:45 PM	1	44	1	0	46	1	0	3	0	4	2	30	0	0	32	1	0	0	0	1	83
Total	4	203	10	1	218	4	0	15	0	19	12	127	3	0	142	4	0	0	0	4	383
03:00 PM	0	55	2	0	57	0	0	3	0	3	2	29	0	0	31	0	0	0	0	0	91
03:15 PM	0	61	0	0	61	1	0	3	0	4	1	24	0	0	25	1	0	1	0	2	92
03:30 PM	0	82	1	0	83	2	0	6	0	8	2	34	0	0	36	1	0	0	0	1	128
03:45 PM	0	65	0	0	65	2	0	7	0	9	2	27	0	0	29	1	0	0	0	1	104
Total	0	263	3	0	266	5	0	19	0	24	7	114	0	0	121	3	0	1	0	4	415
04:00 PM	1	38	2	0	41	0	0	2	1	3	2	26	0	0	28	1	0	0	0	1	73
04:15 PM	0	56	0	0	56	0	0	5	0	5	0	24	0	0	24	1	0	0	0	1	86
04:30 PM	1	59	1	0	61	0	0	3	0	3	1	13	2	0	16	3	0	0	0	3	83
04:45 PM	0	60	1	0	61	0	0	2	0	2	2	13	0	0	15	0	0	1	0	1	79
Total	2	213	4	0	219	0	0	12	1	13	5	76	2	0	83	5	0	1	0	6	321
05:00 PM	0	76	0	0	76	1	0	1	0	2	0	27	1	0	28	2	0	1	0	3	109
05:15 PM	0	61	1	0	62	0	0	2	0	2	1	15	0	0	16	1	0	0	0	1	81
05:30 PM	0	92	1	0	93	0	0	1	0	1	2	10	0	0	12	1	0	0	0	1	107
05:45 PM	0	62	0	0	62	0	0	2	0	2	0	16	0	0	16	0	0	0	0	0	80
Total	0	291	2	0	293	1	0	6	0	7	3	68	1	0	72	4	0	1	0	5	377
Grand Total	18	1857	72	5	1952	57	0	156	7	220	135	2018	30	0	2183	37	1	9	8	55	4410
Apprch %	0.9	95.1	3.7	0.3		25.9	0	70.9	3.2		6.2	92.4	1.4	0		67.3	1.8	16.4	14.5		
Total %	0.4	42.1	1.6	0.1	44.3	1.3	0	3.5	0.2	5	3.1	45.8	0.7	0	49.5	0.8	0	0.2	0.2	1.2	
Lights	11	1696	72	5	1784	56	0	155	7	218	135	1831	20	0	1986	22	1	5	8	36	4024
% Lights	61.1	91.3	100	100	91.4	98.2	0	99.4	100	99.1	100	90.7	66.7	0	91	59.5	100	55.6	100	65.5	91.2
East Bay Tire	5	0	0	0	5	0	0	0	0	0	0	0	4	0	4	10	0	2	0	12	21
% East Bay Tire	27.8	0	0	0	0.3	0	0	0	0	0	0	0	13.3	0	0.2	27	0	22.2	0	21.8	0.5
Recology	0	6	0	0	6	0	0	0	0	0	0	0	3	0	3	0	0	0	0	0	9
% Recology	0	0.3	0	0	0.3	0	0	0	0	0	0	0	10	0	0.1	0	0	0	0	0	0.2
Heavy	2	155	0	0	157	1	0	1	0	2	0	187	3	0	190	5	0	2	0	7	356
% Heavy	11.1	8.3	0	0	8	1.8	0	0.6	0	0.9	0	9.3	10	0	8.7	13.5	0	22.2	0	12.7	8.1

	ROGERS AVE Southbound				DRIVEWAY Westbound				ROGERS AVE Northbound				EAST BAY TIRE DW Eastbound				
Start Time	Right	Thru	Left	App. Total	Right	Thru	Left	App. Total	Right	Thru	Left	App. Total	Right	Thru	Left	App. Total	Int. Total
Peak Hour Analysis From 04:00 AM to 05:45 PM - Peak 1 of 1																	
Peak Hour for Entire Intersection Begins at 03:00 PM																	
03:00 PM	0	55	**2**	57	0	0	3	3	**2**	29	0	31	0	0	0	0	91
03:15 PM	0	61	0	61	1	0	3	4	1	24	0	25	**1**	0	**1**	**2**	92
03:30 PM	0	**82**	1	**83**	**2**	0	6	8	2	**34**	0	**36**	1	0	0	1	**128**
03:45 PM	0	65	0	65	2	0	**7**	**9**	2	27	0	29	1	0	0	1	104
Total Volume	0	263	3	266	5	0	19	24	7	114	0	121	3	0	1	4	415
% App. Total	0	98.9	1.1		20.8	0	79.2		5.8	94.2	0		75	0	25		
PHF	.000	.802	.375	.801	.625	.000	.679	.667	.875	.838	.000	.840	.750	.000	.250	.500	.811

Traffic Data Service

San Jose, CA
(408) 622-4787
tdsbay@cs.com

File Name : East Bay Tire 3-27-18 FINAL
Site Code : 00000001
Start Date : 3/27/2018
Page No : 3

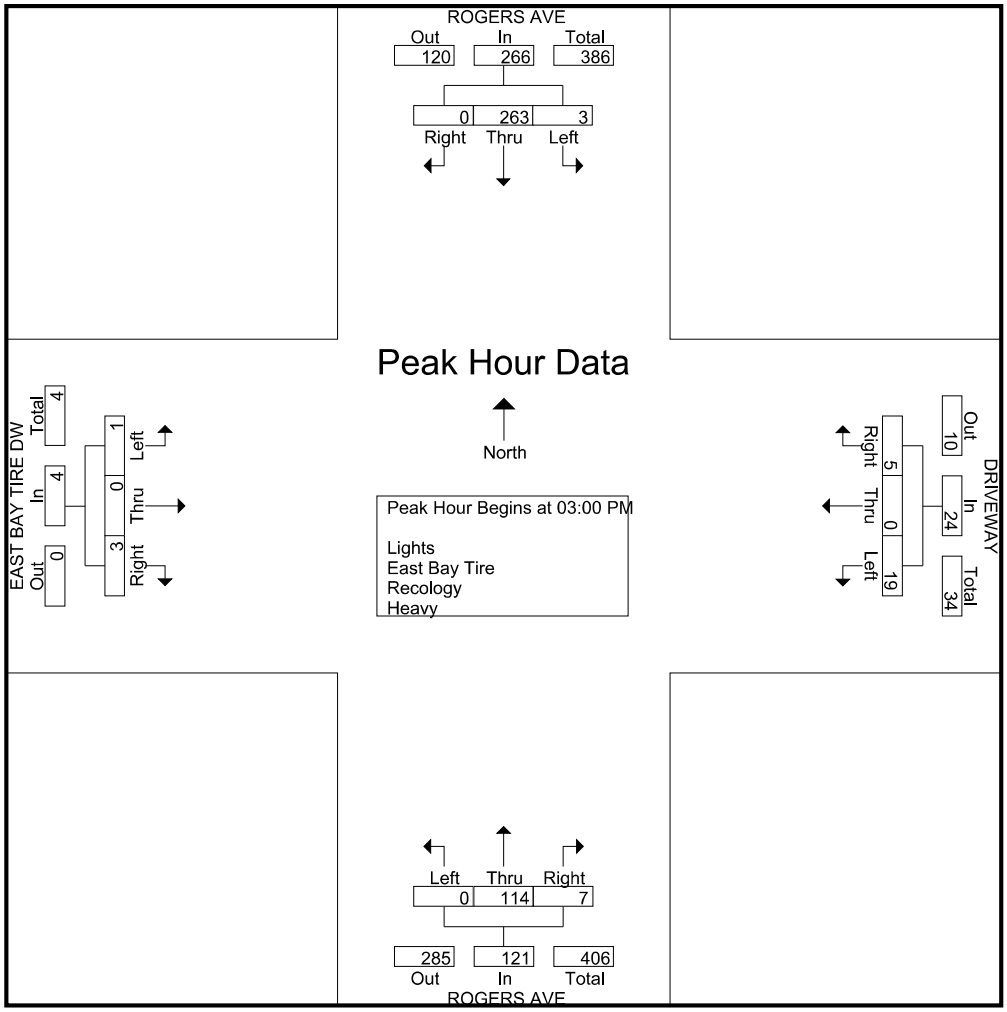

Traffic Data Service

San Jose, CA
(408) 622-4787
tdsbay@cs.com

File Name : East Bay Tire 3-27-18 FINAL
Site Code : 00000001
Start Date : 3/27/2018
Page No : 1

Groups Printed- East Bay Tire

	ROGERS AVE Southbound					DRIVEWAY Westbound					ROGERS AVE Northbound					EAST BAY TIRE DW Eastbound					
Start Time	Right	Thru	Left	Peds	App. Total	Right	Thru	Left	Peds	App. Total	Right	Thru	Left	Peds	App. Total	Right	Thru	Left	Peds	App. Total	Int. Total
04:00 AM	0	0	0	0	0	0	0	0	0	0	0	0	0	0	0	0	0	0	0	0	0
04:15 AM	0	0	0	0	0	0	0	0	0	0	0	0	0	0	0	0	0	0	0	0	0
04:30 AM	0	0	0	0	0	0	0	0	0	0	0	0	0	0	0	0	0	0	0	0	0
04:45 AM	0	0	0	0	0	0	0	0	0	0	0	0	0	0	0	0	0	0	0	0	0
Total	0	0	0	0	0	0	0	0	0	0	0	0	0	0	0	0	0	0	0	0	0
05:00 AM	0	0	0	0	0	0	0	0	0	0	0	0	0	0	0	0	0	0	0	0	0
05:15 AM	0	0	0	0	0	0	0	0	0	0	0	0	0	0	0	0	0	0	0	0	0
05:30 AM	0	0	0	0	0	0	0	0	0	0	0	0	0	0	0	0	0	0	0	0	0
05:45 AM	0	0	0	0	0	0	0	0	0	0	0	0	0	0	0	0	0	0	0	0	0
Total	0	0	0	0	0	0	0	0	0	0	0	0	0	0	0	0	0	0	0	0	0
06:00 AM	0	0	0	0	0	0	0	0	0	0	0	0	0	0	0	0	0	0	0	0	0
06:15 AM	0	0	0	0	0	0	0	0	0	0	0	0	0	0	0	0	0	0	0	0	0
06:30 AM	0	0	0	0	0	0	0	0	0	0	0	0	0	0	0	0	0	0	0	0	0
06:45 AM	0	0	0	0	0	0	0	0	0	0	0	0	0	0	0	0	0	0	0	0	0
Total	0	0	0	0	0	0	0	0	0	0	0	0	0	0	0	0	0	0	0	0	0
07:00 AM	0	0	0	0	0	0	0	0	0	0	0	0	0	0	0	0	0	0	0	0	0
07:15 AM	1	0	0	0	1	0	0	0	0	0	0	0	0	0	0	0	0	0	0	0	1
07:30 AM	0	0	0	0	0	0	0	0	0	0	0	0	0	0	0	0	0	0	0	0	0
07:45 AM	0	0	0	0	0	0	0	0	0	0	0	0	0	0	0	0	0	0	0	0	0
Total	1	0	0	0	1	0	0	0	0	0	0	0	0	0	0	0	0	0	0	0	1
08:00 AM	0	0	0	0	0	0	0	0	0	0	0	0	0	0	0	0	0	0	0	0	0
08:15 AM	0	0	0	0	0	0	0	0	0	0	0	0	0	0	0	0	0	0	0	0	0
08:30 AM	0	0	0	0	0	0	0	0	0	0	0	0	0	0	0	1	0	0	0	1	1
08:45 AM	0	0	0	0	0	0	0	0	0	0	0	0	0	0	0	0	0	0	0	0	0
Total	0	0	0	0	0	0	0	0	0	0	0	0	0	0	0	1	0	0	0	1	1
09:00 AM	0	0	0	0	0	0	0	0	0	0	0	0	0	0	0	0	0	0	0	0	0
09:15 AM	0	0	0	0	0	0	0	0	0	0	0	0	0	0	0	0	0	0	0	0	0
09:30 AM	0	0	0	0	0	0	0	0	0	0	0	0	0	0	0	1	0	0	0	1	1
09:45 AM	0	0	0	0	0	0	0	0	0	0	0	0	0	0	0	0	0	0	0	0	0
Total	0	0	0	0	0	0	0	0	0	0	0	0	0	0	0	1	0	0	0	1	1
10:00 AM	0	0	0	0	0	0	0	0	0	0	0	0	0	0	0	0	0	0	0	0	0
10:15 AM	0	0	0	0	0	0	0	0	0	0	0	0	0	0	0	0	0	0	0	0	0
10:30 AM	0	0	0	0	0	0	0	0	0	0	0	0	0	0	0	0	0	0	0	0	0
10:45 AM	0	0	0	0	0	0	0	0	0	0	0	0	0	0	0	0	0	0	0	0	0
Total	0	0	0	0	0	0	0	0	0	0	0	0	0	0	0	0	0	0	0	0	0
11:00 AM	0	0	0	0	0	0	0	0	0	0	0	0	0	0	0	0	0	0	0	0	0
11:15 AM	1	0	0	0	1	0	0	0	0	0	0	0	0	0	0	0	0	0	0	0	1
11:30 AM	0	0	0	0	0	0	0	0	0	0	0	0	0	0	0	0	0	0	0	0	0
11:45 AM	0	0	0	0	0	0	0	0	0	0	0	0	0	0	0	1	0	0	0	1	1
Total	1	0	0	0	1	0	0	0	0	0	0	0	0	0	0	1	0	0	0	1	2
12:00 PM	0	0	0	0	0	0	0	0	0	0	0	0	1	0	1	0	0	0	0	0	1
12:15 PM	0	0	0	0	0	0	0	0	0	0	0	0	1	0	1	0	0	0	0	0	1
12:30 PM	0	0	0	0	0	0	0	0	0	0	0	0	0	0	0	0	0	1	0	1	1
12:45 PM	0	0	0	0	0	0	0	0	0	0	0	0	0	0	0	0	0	0	0	0	0
Total	0	0	0	0	0	0	0	0	0	0	0	0	2	0	2	0	0	1	0	1	3
01:00 PM	0	0	0	0	0	0	0	0	0	0	0	0	0	0	0	0	0	0	0	0	0
01:15 PM	0	0	0	0	0	0	0	0	0	0	0	0	0	0	0	0	0	0	0	0	0
01:30 PM	1	0	0	0	1	0	0	0	0	0	0	0	0	0	0	1	0	0	0	1	2
01:45 PM	0	0	0	0	0	0	0	0	0	0	0	0	0	0	0	0	0	0	0	0	0
Total	1	0	0	0	1	0	0	0	0	0	0	0	0	0	0	1	0	0	0	1	2

Traffic Data Service

San Jose, CA
(408) 622-4787
tdsbay@cs.com

File Name : East Bay Tire 3-27-18 FINAL
Site Code : 00000001
Start Date : 3/27/2018
Page No : 2

Groups Printed- East Bay Tire

	ROGERS AVE Southbound					DRIVEWAY Westbound					ROGERS AVE Northbound					EAST BAY TIRE DW Eastbound					
Start Time	Right	Thru	Left	Peds	App. Total	Right	Thru	Left	Peds	App. Total	Right	Thru	Left	Peds	App. Total	Right	Thru	Left	Peds	App. Total	Int. Total
02:00 PM	0	0	0	0	0	0	0	0	0	0	0	0	0	0	0	2	0	0	0	2	2
02:15 PM	0	0	0	0	0	0	0	0	0	0	0	0	1	0	1	0	0	0	0	0	1
02:30 PM	1	0	0	0	1	0	0	0	0	0	0	0	1	0	1	0	0	0	0	0	2
02:45 PM	0	0	0	0	0	0	0	0	0	0	0	0	0	0	0	0	0	0	0	0	0
Total	1	0	0	0	1	0	0	0	0	0	0	0	2	0	2	2	0	0	0	2	5
03:00 PM	0	0	0	0	0	0	0	0	0	0	0	0	0	0	0	0	0	0	0	0	0
03:15 PM	0	0	0	0	0	0	0	0	0	0	0	0	0	0	0	1	0	1	0	2	2
03:30 PM	0	0	0	0	0	0	0	0	0	0	0	0	0	0	0	1	0	0	0	1	1
03:45 PM	0	0	0	0	0	0	0	0	0	0	0	0	0	0	0	1	0	0	0	1	1
Total	0	0	0	0	0	0	0	0	0	0	0	0	0	0	0	3	0	1	0	4	4
04:00 PM	1	0	0	0	1	0	0	0	0	0	0	0	0	0	0	0	0	0	0	0	1
04:15 PM	0	0	0	0	0	0	0	0	0	0	0	0	0	0	0	0	0	0	0	0	0
04:30 PM	0	0	0	0	0	0	0	0	0	0	0	0	0	0	0	0	0	0	0	0	0
04:45 PM	0	0	0	0	0	0	0	0	0	0	0	0	0	0	0	0	0	0	0	0	0
Total	1	0	0	0	1	0	0	0	0	0	0	0	0	0	0	0	0	0	0	0	1
05:00 PM	0	0	0	0	0	0	0	0	0	0	0	0	0	0	0	0	0	0	0	0	0
05:15 PM	0	0	0	0	0	0	0	0	0	0	0	0	0	0	0	1	0	0	0	1	1
05:30 PM	0	0	0	0	0	0	0	0	0	0	0	0	0	0	0	0	0	0	0	0	0
05:45 PM	0	0	0	0	0	0	0	0	0	0	0	0	0	0	0	0	0	0	0	0	0
Total	0	0	0	0	0	0	0	0	0	0	0	0	0	0	0	1	0	0	0	1	1
Grand Total	5	0	0	0	5	0	0	0	0	0	0	0	4	0	4	10	0	2	0	12	21
Apprch %	100	0	0	0		0	0	0	0		0	0	100	0		83.3	0	16.7	0		
Total %	23.8	0	0	0	23.8	0	0	0	0	0	0	0	19	0	19	47.6	0	9.5	0	57.1	

	ROGERS AVE Southbound				DRIVEWAY Westbound				ROGERS AVE Northbound				EAST BAY TIRE DW Eastbound				
Start Time	Right	Thru	Left	App. Total	Right	Thru	Left	App. Total	Right	Thru	Left	App. Total	Right	Thru	Left	App. Total	Int. Total
Peak Hour Analysis From 04:00 AM to 05:45 PM - Peak 1 of 1																	
Peak Hour for Entire Intersection Begins at 01:30 PM																	
01:30 PM	**1**	0	0	**1**	0	0	0	0	0	0	0	0	1	0	0	1	**2**
01:45 PM	0	0	0	0	0	0	0	0	0	0	0	0	0	0	0	0	0
02:00 PM	0	0	0	0	0	0	0	0	0	0	0	0	**2**	0	0	**2**	2
02:15 PM	0	0	0	0	0	0	0	0	0	0	**1**	**1**	0	0	0	0	1
Total Volume	1	0	0	1	0	0	0	0	0	0	1	1	3	0	0	3	5
% App. Total	100	0	0		0	0	0		0	0	100		100	0	0		
PHF	.250	.000	.000	.250	.000	.000	.000	.000	.000	.000	.250	.250	.375	.000	.000	.375	.625

Traffic Data Service

San Jose, CA
(408) 622-4787
tdsbay@cs.com

File Name : East Bay Tire 3-27-18 FINAL
Site Code : 00000001
Start Date : 3/27/2018
Page No : 3

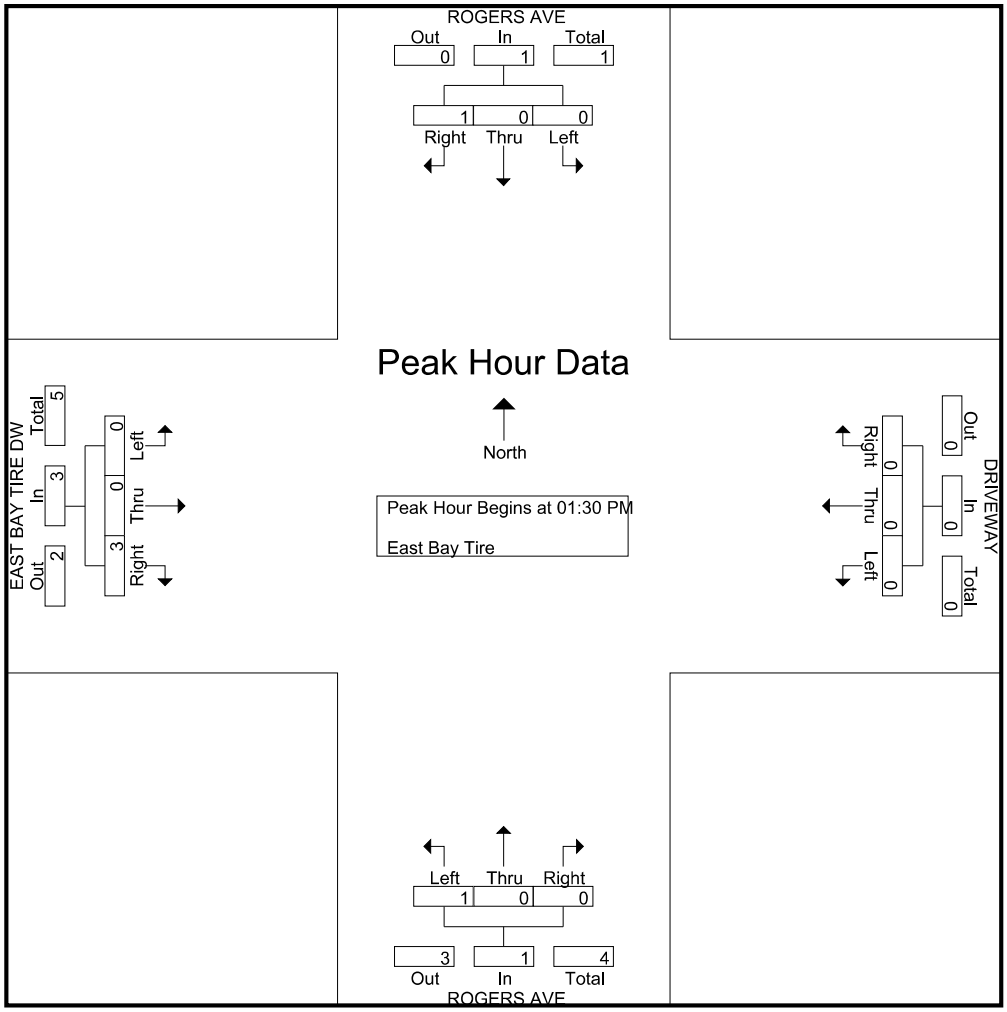

Traffic Data Service

San Jose, CA
(408) 622-4787
tdsbay@cs.com

File Name : East Bay Tire 3-27-18 FINAL
Site Code : 00000001
Start Date : 3/27/2018
Page No : 1

Groups Printed- Heavy

	ROGERS AVE Southbound					DRIVEWAY Westbound					ROGERS AVE Northbound					EAST BAY TIRE DW Eastbound					
Start Time	Right	Thru	Left	Peds	App. Total	Right	Thru	Left	Peds	App. Total	Right	Thru	Left	Peds	App. Total	Right	Thru	Left	Peds	App. Total	Int. Total
04:00 AM	0	0	0	0	0	0	0	0	0	0	0	0	0	0	0	0	0	0	0	0	0
04:15 AM	0	0	0	0	0	0	0	0	0	0	0	0	0	0	0	0	0	0	0	0	0
04:30 AM	0	4	0	0	4	0	0	0	0	0	0	2	0	0	2	0	0	0	0	0	6
04:45 AM	0	0	0	0	0	0	0	0	0	0	0	1	0	0	1	0	0	0	0	0	1
Total	0	4	0	0	4	0	0	0	0	0	0	3	0	0	3	0	0	0	0	0	7
05:00 AM	0	1	0	0	1	0	0	0	0	0	0	1	0	0	1	0	0	0	0	0	2
05:15 AM	0	3	0	0	3	0	0	0	0	0	0	2	0	0	2	0	0	0	0	0	5
05:30 AM	0	1	0	0	1	0	0	0	0	0	0	1	0	0	1	0	0	0	0	0	2
05:45 AM	0	1	0	0	1	0	0	0	0	0	0	1	0	0	1	0	0	0	0	0	2
Total	0	6	0	0	6	0	0	0	0	0	0	5	0	0	5	0	0	0	0	0	11
06:00 AM	0	0	0	0	0	0	0	0	0	0	0	3	0	0	3	0	0	0	0	0	3
06:15 AM	0	1	0	0	1	0	0	0	0	0	0	2	0	0	2	0	0	0	0	0	3
06:30 AM	0	1	0	0	1	0	0	0	0	0	0	1	0	0	1	0	0	0	0	0	2
06:45 AM	0	3	0	0	3	0	0	0	0	0	0	6	0	0	6	0	0	0	0	0	9
Total	0	5	0	0	5	0	0	0	0	0	0	12	0	0	12	0	0	0	0	0	17
07:00 AM	0	1	0	0	1	0	0	0	0	0	0	2	0	0	2	0	0	0	0	0	3
07:15 AM	0	0	0	0	0	0	0	0	0	0	0	3	0	0	3	0	0	0	0	0	3
07:30 AM	0	0	0	0	0	0	0	0	0	0	0	2	0	0	2	0	0	0	0	0	2
07:45 AM	0	3	0	0	3	0	0	0	0	0	0	3	0	0	3	0	0	0	0	0	6
Total	0	4	0	0	4	0	0	0	0	0	0	10	0	0	10	0	0	0	0	0	14
08:00 AM	0	3	0	0	3	0	0	0	0	0	0	7	0	0	7	1	0	0	0	1	11
08:15 AM	0	4	0	0	4	0	0	0	0	0	0	5	0	0	5	0	0	0	0	0	9
08:30 AM	0	0	0	0	0	0	0	0	0	0	0	0	0	0	0	0	0	0	0	0	0
08:45 AM	0	3	0	0	3	0	0	0	0	0	0	5	0	0	5	1	0	0	0	1	9
Total	0	10	0	0	10	0	0	0	0	0	0	17	0	0	17	2	0	0	0	2	29
09:00 AM	0	5	0	0	5	0	0	0	0	0	0	6	0	0	6	0	0	0	0	0	11
09:15 AM	0	0	0	0	0	0	0	0	0	0	0	7	0	0	7	0	0	0	0	0	7
09:30 AM	0	3	0	0	3	0	0	1	0	1	0	4	0	0	4	0	0	0	0	0	8
09:45 AM	0	1	0	0	1	0	0	0	0	0	0	5	0	0	5	0	0	0	0	0	6
Total	0	9	0	0	9	0	0	1	0	1	0	22	0	0	22	0	0	0	0	0	32
10:00 AM	0	4	0	0	4	0	0	0	0	0	0	4	0	0	4	0	0	0	0	0	8
10:15 AM	0	5	0	0	5	0	0	0	0	0	0	8	1	0	9	1	0	0	0	1	15
10:30 AM	0	6	0	0	6	0	0	0	0	0	0	5	0	0	5	0	0	0	0	0	11
10:45 AM	0	1	0	0	1	0	0	0	0	0	0	8	1	0	9	0	0	0	0	0	10
Total	0	16	0	0	16	0	0	0	0	0	0	25	2	0	27	1	0	0	0	1	44
11:00 AM	0	7	0	0	7	0	0	0	0	0	0	4	0	0	4	0	0	0	0	0	11
11:15 AM	0	5	0	0	5	0	0	0	0	0	0	4	0	0	4	0	0	0	0	0	9
11:30 AM	0	10	0	0	10	0	0	0	0	0	0	8	0	0	8	0	0	0	0	0	18
11:45 AM	0	3	0	0	3	0	0	0	0	0	0	4	0	0	4	0	0	0	0	0	7
Total	0	25	0	0	25	0	0	0	0	0	0	20	0	0	20	0	0	0	0	0	45
12:00 PM	0	4	0	0	4	0	0	0	0	0	0	7	0	0	7	0	0	0	0	0	11
12:15 PM	0	5	0	0	5	0	0	0	0	0	0	4	0	0	4	0	0	0	0	0	9
12:30 PM	1	4	0	0	5	0	0	0	0	0	0	10	0	0	10	0	0	0	0	0	15
12:45 PM	0	3	0	0	3	0	0	0	0	0	0	0	0	0	0	0	0	0	0	0	3
Total	1	16	0	0	17	0	0	0	0	0	0	21	0	0	21	0	0	0	0	0	38
01:00 PM	0	1	0	0	1	0	0	0	0	0	0	3	1	0	4	1	0	1	0	2	7
01:15 PM	0	3	0	0	3	0	0	0	0	0	0	3	0	0	3	0	0	0	0	0	6
01:30 PM	0	3	0	0	3	0	0	0	0	0	0	5	0	0	5	1	0	0	0	1	9
01:45 PM	0	1	0	0	1	0	0	0	0	0	0	6	0	0	6	0	0	0	0	0	7
Total	0	8	0	0	8	0	0	0	0	0	0	17	1	0	18	2	0	1	0	3	29

Traffic Data Service

San Jose, CA
(408) 622-4787
tdsbay@cs.com

File Name : East Bay Tire 3-27-18 FINAL
Site Code : 00000001
Start Date : 3/27/2018
Page No : 2

Groups Printed- Heavy

	ROGERS AVE Southbound					DRIVEWAY Westbound					ROGERS AVE Northbound					EAST BAY TIRE DW Eastbound					
Start Time	Right	Thru	Left	Peds	App. Total	Right	Thru	Left	Peds	App. Total	Right	Thru	Left	Peds	App. Total	Right	Thru	Left	Peds	App. Total	Int. Total
02:00 PM	0	10	0	0	10	0	0	0	0	0	0	7	0	0	7	0	0	0	0	0	17
02:15 PM	0	1	0	0	1	0	0	0	0	0	0	5	0	0	5	0	0	0	0	0	6
02:30 PM	0	4	0	0	4	0	0	0	0	0	0	2	0	0	2	0	0	0	0	0	6
02:45 PM	0	6	0	0	6	0	0	0	0	0	0	3	0	0	3	0	0	0	0	0	9
Total	0	21	0	0	21	0	0	0	0	0	0	17	0	0	17	0	0	0	0	0	38
03:00 PM	0	1	0	0	1	0	0	0	0	0	0	2	0	0	2	0	0	0	0	0	3
03:15 PM	0	5	0	0	5	1	0	0	0	1	0	1	0	0	1	0	0	0	0	0	7
03:30 PM	0	2	0	0	2	0	0	0	0	0	0	4	0	0	4	0	0	0	0	0	6
03:45 PM	0	3	0	0	3	0	0	0	0	0	0	1	0	0	1	0	0	0	0	0	4
Total	0	11	0	0	11	1	0	0	0	1	0	8	0	0	8	0	0	0	0	0	20
04:00 PM	0	2	0	0	2	0	0	0	0	0	0	1	0	0	1	0	0	0	0	0	3
04:15 PM	0	8	0	0	8	0	0	0	0	0	0	4	0	0	4	0	0	0	0	0	12
04:30 PM	1	3	0	0	4	0	0	0	0	0	0	0	0	0	0	0	0	0	0	0	4
04:45 PM	0	2	0	0	2	0	0	0	0	0	0	1	0	0	1	0	0	0	0	0	3
Total	1	15	0	0	16	0	0	0	0	0	0	6	0	0	6	0	0	0	0	0	22
05:00 PM	0	0	0	0	0	0	0	0	0	0	0	1	0	0	1	0	0	1	0	1	2
05:15 PM	0	3	0	0	3	0	0	0	0	0	0	1	0	0	1	0	0	0	0	0	4
05:30 PM	0	1	0	0	1	0	0	0	0	0	0	1	0	0	1	0	0	0	0	0	2
05:45 PM	0	1	0	0	1	0	0	0	0	0	0	1	0	0	1	0	0	0	0	0	2
Total	0	5	0	0	5	0	0	0	0	0	0	4	0	0	4	0	0	1	0	1	10
Grand Total	2	155	0	0	157	1	0	1	0	2	0	187	3	0	190	5	0	2	0	7	356
Apprch %	1.3	98.7	0	0		50	0	50	0		0	98.4	1.6	0		71.4	0	28.6	0		
Total %	0.6	43.5	0	0	44.1	0.3	0	0.3	0	0.6	0	52.5	0.8	0	53.4	1.4	0	0.6	0	2	

	ROGERS AVE Southbound				DRIVEWAY Westbound				ROGERS AVE Northbound				EAST BAY TIRE DW Eastbound				
Start Time	Right	Thru	Left	App. Total	Right	Thru	Left	App. Total	Right	Thru	Left	App. Total	Right	Thru	Left	App. Total	Int. Total
Peak Hour Analysis From 04:00 AM to 05:45 PM - Peak 1 of 1																	
Peak Hour for Entire Intersection Begins at 10:45 AM																	
10:45 AM	0	1	0	1	0	0	0	0	0	**8**	**1**	**9**	0	0	0	0	10
11:00 AM	0	7	0	7	0	0	0	0	0	4	0	4	0	0	0	0	11
11:15 AM	0	5	0	5	0	0	0	0	0	4	0	4	0	0	0	0	9
11:30 AM	0	**10**	0	**10**	0	0	0	0	0	8	0	8	0	0	0	0	**18**
Total Volume	0	23	0	23	0	0	0	0	0	24	1	25	0	0	0	0	48
% App. Total	0	100	0		0	0	0		0	96	4		0	0	0		
PHF	.000	.575	.000	.575	.000	.000	.000	.000	.000	.750	.250	.694	.000	.000	.000	.000	.667

Traffic Data Service

San Jose, CA
(408) 622-4787
tdsbay@cs.com

File Name : East Bay Tire 3-27-18 FINAL
Site Code : 00000001
Start Date : 3/27/2018
Page No : 3

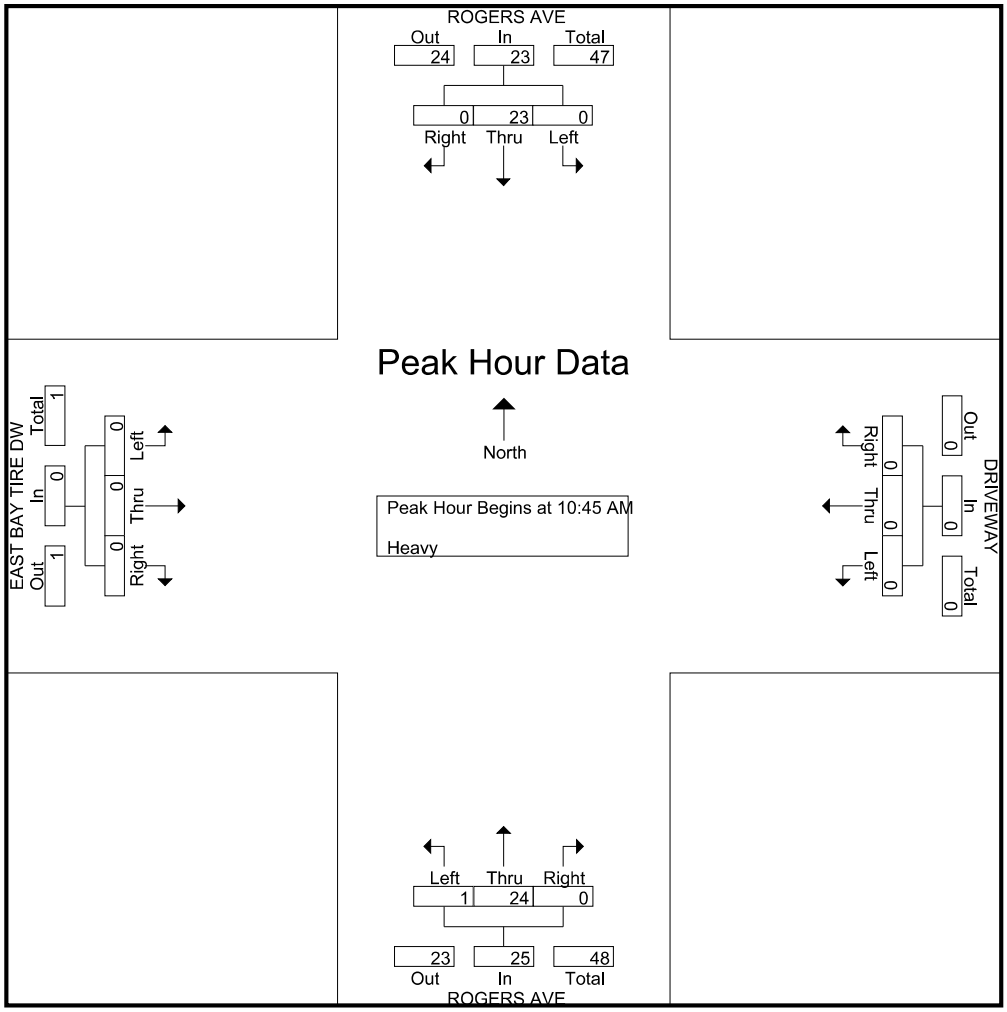

Traffic Data Service

San Jose, CA
(408) 622-4787
tdsbay@cs.com

File Name : East Bay Tire 3-27-18 FINAL
Site Code : 00000001
Start Date : 3/27/2018
Page No : 1

Groups Printed- Lights

	ROGERS AVE Southbound					DRIVEWAY Westbound					ROGERS AVE Northbound					EAST BAY TIRE DW Eastbound					
Start Time	Right	Thru	Left	Peds	App. Total	Right	Thru	Left	Peds	App. Total	Right	Thru	Left	Peds	App. Total	Right	Thru	Left	Peds	App. Total	Int. Total
04:00 AM	0	0	1	1	2	0	0	1	2	3	4	2	0	0	6	0	0	0	0	0	11
04:15 AM	1	3	2	0	6	3	0	4	0	7	4	9	0	0	13	0	0	0	0	0	26
04:30 AM	0	2	2	0	4	3	0	1	0	4	1	5	0	0	6	0	0	0	0	0	14
04:45 AM	0	0	1	0	1	0	0	4	0	4	6	15	0	0	21	0	0	0	0	0	26
Total	1	5	6	1	13	6	0	10	2	18	15	31	0	0	46	0	0	0	0	0	77
05:00 AM	0	7	2	0	9	1	0	2	2	5	7	14	0	0	21	2	0	0	1	3	38
05:15 AM	0	4	0	0	4	2	0	2	0	4	5	23	1	0	29	0	0	0	0	0	37
05:30 AM	0	10	0	0	10	3	0	3	0	6	2	38	1	0	41	0	0	0	0	0	57
05:45 AM	0	7	3	0	10	1	0	8	1	10	6	50	0	0	56	0	0	0	0	0	76
Total	0	28	5	0	33	7	0	15	3	25	20	125	2	0	147	2	0	0	1	3	208
06:00 AM	0	5	2	0	7	4	0	4	0	8	4	37	0	0	41	0	0	0	0	0	56
06:15 AM	0	10	2	0	12	3	0	5	0	8	1	24	1	0	26	0	0	0	1	1	47
06:30 AM	1	10	1	1	13	0	0	2	0	2	2	28	0	0	30	0	0	0	2	2	47
06:45 AM	0	23	1	0	24	1	0	2	0	3	2	33	0	0	35	0	0	0	0	0	62
Total	1	48	6	1	56	8	0	13	0	21	9	122	1	0	132	0	0	0	3	3	212
07:00 AM	0	22	2	0	24	1	0	4	0	5	1	38	0	0	39	0	0	0	0	0	68
07:15 AM	1	23	1	0	25	0	0	1	0	1	2	52	1	0	55	0	0	0	0	0	81
07:30 AM	0	14	0	0	14	0	0	4	0	4	2	38	1	0	41	0	0	0	0	0	59
07:45 AM	0	13	0	0	13	1	0	2	0	3	3	59	0	0	62	0	0	0	1	1	79
Total	1	72	3	0	76	2	0	11	0	13	8	187	2	0	197	0	0	0	1	1	287
08:00 AM	0	19	2	0	21	2	0	3	0	5	5	72	1	0	78	0	0	0	0	0	104
08:15 AM	0	14	1	0	15	4	0	6	0	10	2	74	1	0	77	0	0	0	0	0	102
08:30 AM	0	30	1	0	31	2	0	2	0	4	2	48	0	0	50	0	0	0	0	0	85
08:45 AM	0	18	0	0	18	0	0	3	0	3	4	55	0	0	59	0	0	0	1	1	81
Total	0	81	4	0	85	8	0	14	0	22	13	249	2	0	264	0	0	0	1	1	372
09:00 AM	0	25	0	0	25	0	0	1	0	1	2	58	1	0	61	0	0	1	0	1	88
09:15 AM	0	27	0	0	27	0	0	2	0	2	0	68	0	0	68	0	0	0	0	0	97
09:30 AM	0	26	1	0	27	0	0	1	0	1	4	60	0	0	64	1	0	0	1	2	94
09:45 AM	0	18	1	0	19	0	0	3	0	3	1	53	0	0	54	0	0	0	0	0	76
Total	0	96	2	0	98	0	0	7	0	7	7	239	1	0	247	1	0	1	1	3	355
10:00 AM	0	24	1	0	25	1	0	1	0	2	0	41	2	0	43	1	0	0	0	1	71
10:15 AM	1	21	1	0	23	1	0	0	0	1	1	38	1	0	40	1	0	0	0	1	65
10:30 AM	1	30	0	0	31	2	0	1	0	3	2	40	1	0	43	0	0	0	0	0	77
10:45 AM	0	22	0	0	22	1	0	1	0	2	0	35	0	0	35	0	0	1	0	1	60
Total	2	97	2	0	101	5	0	3	0	8	3	154	4	0	161	2	0	1	0	3	273
11:00 AM	2	33	0	0	35	2	0	0	0	2	2	36	0	0	38	3	0	0	0	3	78
11:15 AM	0	30	0	0	30	0	0	1	0	1	1	29	0	0	30	0	0	0	0	0	61
11:30 AM	0	15	0	0	15	0	0	0	0	0	0	21	0	0	21	0	0	0	0	0	36
11:45 AM	0	28	0	0	28	0	0	1	0	1	1	31	0	0	32	1	0	0	0	1	62
Total	2	106	0	0	108	2	0	2	0	4	4	117	0	0	121	4	0	0	0	4	237
12:00 PM	0	35	2	0	37	1	0	2	0	3	2	33	1	0	36	1	0	0	0	1	77
12:15 PM	0	29	1	1	31	1	0	1	1	3	2	22	1	0	25	0	0	0	0	0	59
12:30 PM	0	31	6	0	37	0	0	3	0	3	8	29	0	0	37	0	0	0	0	0	77
12:45 PM	0	30	3	1	34	0	0	0	0	0	3	30	0	0	33	0	0	0	0	0	67
Total	0	125	12	2	139	2	0	6	1	9	15	114	2	0	131	1	0	0	0	1	280
01:00 PM	1	28	3	0	32	1	0	1	0	2	3	36	1	0	40	0	0	1	1	2	76
01:15 PM	0	31	4	0	35	3	0	6	0	9	5	50	0	0	55	1	0	0	0	1	100
01:30 PM	0	31	2	0	33	1	0	6	0	7	2	33	0	0	35	0	0	1	0	1	76
01:45 PM	0	30	4	0	34	2	0	9	0	11	4	24	1	0	29	1	1	0	0	2	76
Total	1	120	13	0	134	7	0	22	0	29	14	143	2	0	159	2	1	2	1	6	328

Traffic Data Service

San Jose, CA
(408) 622-4787
tdsbay@cs.com

File Name : East Bay Tire 3-27-18 FINAL
Site Code : 00000001
Start Date : 3/27/2018
Page No : 2

Groups Printed- Lights

	ROGERS AVE Southbound					DRIVEWAY Westbound					ROGERS AVE Northbound					EAST BAY TIRE DW Eastbound					
Start Time	Right	Thru	Left	Peds	App. Total	Right	Thru	Left	Peds	App. Total	Right	Thru	Left	Peds	App. Total	Right	Thru	Left	Peds	App. Total	Int. Total
02:00 PM	0	61	5	1	67	1	0	6	0	7	4	28	0	0	32	0	0	0	0	0	106
02:15 PM	0	38	2	0	40	1	0	5	0	6	2	22	0	0	24	0	0	0	0	0	70
02:30 PM	2	45	2	0	49	1	0	1	0	2	4	33	1	0	38	1	0	0	0	1	90
02:45 PM	1	38	1	0	40	1	0	3	0	4	2	27	0	0	29	1	0	0	0	1	74
Total	3	182	10	1	196	4	0	15	0	19	12	110	1	0	123	2	0	0	0	2	340
03:00 PM	0	54	2	0	56	0	0	3	0	3	2	27	0	0	29	0	0	0	0	0	88
03:15 PM	0	56	0	0	56	0	0	3	0	3	1	23	0	0	24	0	0	0	0	0	83
03:30 PM	0	80	1	0	81	2	0	6	0	8	2	30	0	0	32	0	0	0	0	0	121
03:45 PM	0	62	0	0	62	2	0	7	0	9	2	26	0	0	28	0	0	0	0	0	99
Total	0	252	3	0	255	4	0	19	0	23	7	106	0	0	113	0	0	0	0	0	391
04:00 PM	0	36	2	0	38	0	0	2	1	3	2	25	0	0	27	1	0	0	0	1	69
04:15 PM	0	48	0	0	48	0	0	5	0	5	0	20	0	0	20	1	0	0	0	1	74
04:30 PM	0	56	1	0	57	0	0	3	0	3	1	13	2	0	16	3	0	0	0	3	79
04:45 PM	0	58	1	0	59	0	0	2	0	2	2	12	0	0	14	0	0	1	0	1	76
Total	0	198	4	0	202	0	0	12	1	13	5	70	2	0	77	5	0	1	0	6	298
05:00 PM	0	76	0	0	76	1	0	1	0	2	0	26	1	0	27	2	0	0	0	2	107
05:15 PM	0	58	1	0	59	0	0	2	0	2	1	14	0	0	15	0	0	0	0	0	76
05:30 PM	0	91	1	0	92	0	0	1	0	1	2	9	0	0	11	1	0	0	0	1	105
05:45 PM	0	61	0	0	61	0	0	2	0	2	0	15	0	0	15	0	0	0	0	0	78
Total	0	286	2	0	288	1	0	6	0	7	3	64	1	0	68	3	0	0	0	3	366
Grand Total	11	1696	72	5	1784	56	0	155	7	218	135	1831	20	0	1986	22	1	5	8	36	4024
Apprch %	0.6	95.1	4	0.3		25.7	0	71.1	3.2		6.8	92.2	1	0		61.1	2.8	13.9	22.2		
Total %	0.3	42.1	1.8	0.1	44.3	1.4	0	3.9	0.2	5.4	3.4	45.5	0.5	0	49.4	0.5	0	0.1	0.2	0.9	

	ROGERS AVE Southbound				DRIVEWAY Westbound				ROGERS AVE Northbound				EAST BAY TIRE DW Eastbound				
Start Time	Right	Thru	Left	App. Total	Right	Thru	Left	App. Total	Right	Thru	Left	App. Total	Right	Thru	Left	App. Total	Int. Total
Peak Hour Analysis From 04:00 AM to 05:45 PM - Peak 1 of 1																	
Peak Hour for Entire Intersection Begins at 03:00 PM																	
03:00 PM	0	54	**2**	56	0	0	3	3	**2**	27	0	29	0	0	0	0	88
03:15 PM	0	56	0	56	0	0	3	3	1	23	0	24	0	0	0	0	83
03:30 PM	0	**80**	1	**81**	**2**	0	6	8	2	**30**	0	**32**	0	0	0	0	**121**
03:45 PM	0	62	0	62	2	0	**7**	**9**	2	26	0	28	0	0	0	0	99
Total Volume	0	252	3	255	4	0	19	23	7	106	0	113	0	0	0	0	391
% App. Total	0	98.8	1.2		17.4	0	82.6		6.2	93.8	0		0	0	0		
PHF	.000	.788	.375	.787	.500	.000	.679	.639	.875	.883	.000	.883	.000	.000	.000	.000	.808

Traffic Data Service

San Jose, CA
(408) 622-4787
tdsbay@cs.com

File Name : East Bay Tire 3-27-18 FINAL
Site Code : 00000001
Start Date : 3/27/2018
Page No : 3

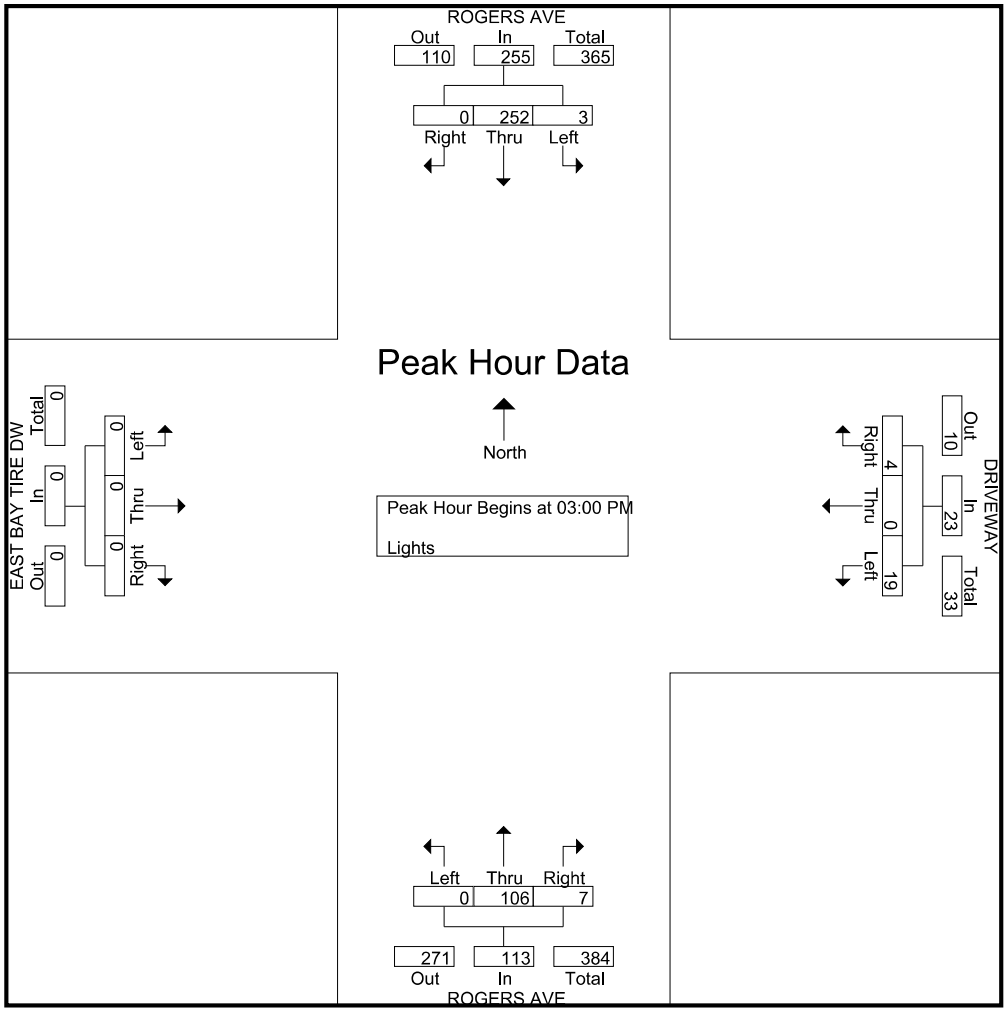

Traffic Data Service

San Jose, CA
(408) 622-4787
tdsbay@cs.com

File Name : East Bay Tire 3-27-18 FINAL
Site Code : 00000001
Start Date : 3/27/2018
Page No : 1

Groups Printed- Recology

	ROGERS AVE Southbound					DRIVEWAY Westbound					ROGERS AVE Northbound					EAST BAY TIRE DW Eastbound					
Start Time	Right	Thru	Left	Peds	App. Total	Right	Thru	Left	Peds	App. Total	Right	Thru	Left	Peds	App. Total	Right	Thru	Left	Peds	App. Total	Int. Total
04:00 AM	0	0	0	0	0	0	0	0	0	0	0	0	0	0	0	0	0	0	0	0	0
04:15 AM	0	0	0	0	0	0	0	0	0	0	0	0	0	0	0	0	0	0	0	0	0
04:30 AM	0	0	0	0	0	0	0	0	0	0	0	0	0	0	0	0	0	0	0	0	0
04:45 AM	0	1	0	0	1	0	0	0	0	0	0	0	0	0	0	0	0	0	0	0	1
Total	0	1	0	0	1	0	0	0	0	0	0	0	0	0	0	0	0	0	0	0	1
05:00 AM	0	2	0	0	2	0	0	0	0	0	0	0	0	0	0	0	0	0	0	0	2
05:15 AM	0	0	0	0	0	0	0	0	0	0	0	0	0	0	0	0	0	0	0	0	0
05:30 AM	0	0	0	0	0	0	0	0	0	0	0	0	0	0	0	0	0	0	0	0	0
05:45 AM	0	0	0	0	0	0	0	0	0	0	0	0	0	0	0	0	0	0	0	0	0
Total	0	2	0	0	2	0	0	0	0	0	0	0	0	0	0	0	0	0	0	0	2
06:00 AM	0	0	0	0	0	0	0	0	0	0	0	0	0	0	0	0	0	0	0	0	0
06:15 AM	0	0	0	0	0	0	0	0	0	0	0	0	0	0	0	0	0	0	0	0	0
06:30 AM	0	0	0	0	0	0	0	0	0	0	0	0	0	0	0	0	0	0	0	0	0
06:45 AM	0	0	0	0	0	0	0	0	0	0	0	0	0	0	0	0	0	0	0	0	0
Total	0	0	0	0	0	0	0	0	0	0	0	0	0	0	0	0	0	0	0	0	0
07:00 AM	0	0	0	0	0	0	0	0	0	0	0	0	0	0	0	0	0	0	0	0	0
07:15 AM	0	0	0	0	0	0	0	0	0	0	0	0	0	0	0	0	0	0	0	0	0
07:30 AM	0	0	0	0	0	0	0	0	0	0	0	0	0	0	0	0	0	0	0	0	0
07:45 AM	0	0	0	0	0	0	0	0	0	0	0	0	0	0	0	0	0	0	0	0	0
Total	0	0	0	0	0	0	0	0	0	0	0	0	0	0	0	0	0	0	0	0	0
08:00 AM	0	0	0	0	0	0	0	0	0	0	0	0	0	0	0	0	0	0	0	0	0
08:15 AM	0	0	0	0	0	0	0	0	0	0	0	0	0	0	0	0	0	0	0	0	0
08:30 AM	0	0	0	0	0	0	0	0	0	0	0	0	0	0	0	0	0	0	0	0	0
08:45 AM	0	0	0	0	0	0	0	0	0	0	0	0	0	0	0	0	0	0	0	0	0
Total	0	0	0	0	0	0	0	0	0	0	0	0	0	0	0	0	0	0	0	0	0
09:00 AM	0	0	0	0	0	0	0	0	0	0	0	0	1	0	1	0	0	0	0	0	1
09:15 AM	0	0	0	0	0	0	0	0	0	0	0	0	0	0	0	0	0	0	0	0	0
09:30 AM	0	2	0	0	2	0	0	0	0	0	0	0	0	0	0	0	0	0	0	0	2
09:45 AM	0	0	0	0	0	0	0	0	0	0	0	0	0	0	0	0	0	0	0	0	0
Total	0	2	0	0	2	0	0	0	0	0	0	0	1	0	1	0	0	0	0	0	3
10:00 AM	0	0	0	0	0	0	0	0	0	0	0	0	0	0	0	0	0	0	0	0	0
10:15 AM	0	0	0	0	0	0	0	0	0	0	0	0	0	0	0	0	0	0	0	0	0
10:30 AM	0	0	0	0	0	0	0	0	0	0	0	0	0	0	0	0	0	0	0	0	0
10:45 AM	0	0	0	0	0	0	0	0	0	0	0	0	0	0	0	0	0	0	0	0	0
Total	0	0	0	0	0	0	0	0	0	0	0	0	0	0	0	0	0	0	0	0	0
11:00 AM	0	0	0	0	0	0	0	0	0	0	0	0	0	0	0	0	0	0	0	0	0
11:15 AM	0	0	0	0	0	0	0	0	0	0	0	0	0	0	0	0	0	0	0	0	0
11:30 AM	0	0	0	0	0	0	0	0	0	0	0	0	0	0	0	0	0	0	0	0	0
11:45 AM	0	0	0	0	0	0	0	0	0	0	0	0	0	0	0	0	0	0	0	0	0
Total	0	0	0	0	0	0	0	0	0	0	0	0	0	0	0	0	0	0	0	0	0
12:00 PM	0	0	0	0	0	0	0	0	0	0	0	0	1	0	1	0	0	0	0	0	1
12:15 PM	0	0	0	0	0	0	0	0	0	0	0	0	0	0	0	0	0	0	0	0	0
12:30 PM	0	0	0	0	0	0	0	0	0	0	0	0	0	0	0	0	0	0	0	0	0
12:45 PM	0	1	0	0	1	0	0	0	0	0	0	0	0	0	0	0	0	0	0	0	1
Total	0	1	0	0	1	0	0	0	0	0	0	0	1	0	1	0	0	0	0	0	2
01:00 PM	0	0	0	0	0	0	0	0	0	0	0	0	0	0	0	0	0	0	0	0	0
01:15 PM	0	0	0	0	0	0	0	0	0	0	0	0	0	0	0	0	0	0	0	0	0
01:30 PM	0	0	0	0	0	0	0	0	0	0	0	0	1	0	1	0	0	0	0	0	1
01:45 PM	0	0	0	0	0	0	0	0	0	0	0	0	0	0	0	0	0	0	0	0	0
Total	0	0	0	0	0	0	0	0	0	0	0	0	1	0	1	0	0	0	0	0	1

Traffic Data Service

San Jose, CA
(408) 622-4787
tdsbay@cs.com

File Name : East Bay Tire 3-27-18 FINAL
Site Code : 00000001
Start Date : 3/27/2018
Page No : 2

Groups Printed- Recology

	ROGERS AVE Southbound					DRIVEWAY Westbound					ROGERS AVE Northbound					EAST BAY TIRE DW Eastbound					
Start Time	Right	Thru	Left	Peds	App. Total	Right	Thru	Left	Peds	App. Total	Right	Thru	Left	Peds	App. Total	Right	Thru	Left	Peds	App. Total	Int. Total
02:00 PM	0	0	0	0	0	0	0	0	0	0	0	0	0	0	0	0	0	0	0	0	0
02:15 PM	0	0	0	0	0	0	0	0	0	0	0	0	0	0	0	0	0	0	0	0	0
02:30 PM	0	0	0	0	0	0	0	0	0	0	0	0	0	0	0	0	0	0	0	0	0
02:45 PM	0	0	0	0	0	0	0	0	0	0	0	0	0	0	0	0	0	0	0	0	0
Total	0	0	0	0	0	0	0	0	0	0	0	0	0	0	0	0	0	0	0	0	0
03:00 PM	0	0	0	0	0	0	0	0	0	0	0	0	0	0	0	0	0	0	0	0	0
03:15 PM	0	0	0	0	0	0	0	0	0	0	0	0	0	0	0	0	0	0	0	0	0
03:30 PM	0	0	0	0	0	0	0	0	0	0	0	0	0	0	0	0	0	0	0	0	0
03:45 PM	0	0	0	0	0	0	0	0	0	0	0	0	0	0	0	0	0	0	0	0	0
Total	0	0	0	0	0	0	0	0	0	0	0	0	0	0	0	0	0	0	0	0	0
04:00 PM	0	0	0	0	0	0	0	0	0	0	0	0	0	0	0	0	0	0	0	0	0
04:15 PM	0	0	0	0	0	0	0	0	0	0	0	0	0	0	0	0	0	0	0	0	0
04:30 PM	0	0	0	0	0	0	0	0	0	0	0	0	0	0	0	0	0	0	0	0	0
04:45 PM	0	0	0	0	0	0	0	0	0	0	0	0	0	0	0	0	0	0	0	0	0
Total	0	0	0	0	0	0	0	0	0	0	0	0	0	0	0	0	0	0	0	0	0
05:00 PM	0	0	0	0	0	0	0	0	0	0	0	0	0	0	0	0	0	0	0	0	0
05:15 PM	0	0	0	0	0	0	0	0	0	0	0	0	0	0	0	0	0	0	0	0	0
05:30 PM	0	0	0	0	0	0	0	0	0	0	0	0	0	0	0	0	0	0	0	0	0
05:45 PM	0	0	0	0	0	0	0	0	0	0	0	0	0	0	0	0	0	0	0	0	0
Total	0	0	0	0	0	0	0	0	0	0	0	0	0	0	0	0	0	0	0	0	0
Grand Total	0	6	0	0	6	0	0	0	0	0	0	0	3	0	3	0	0	0	0	0	9
Apprch %	0	100	0	0		0	0	0	0		0	0	100	0		0	0	0	0		
Total %	0	66.7	0	0	66.7	0	0	0	0	0	0	0	33.3	0	33.3	0	0	0	0	0	

	ROGERS AVE Southbound				DRIVEWAY Westbound				ROGERS AVE Northbound				EAST BAY TIRE DW Eastbound				
Start Time	Right	Thru	Left	App. Total	Right	Thru	Left	App. Total	Right	Thru	Left	App. Total	Right	Thru	Left	App. Total	Int. Total
Peak Hour Analysis From 04:00 AM to 05:45 PM - Peak 1 of 1																	
Peak Hour for Entire Intersection Begins at 04:15 AM																	
04:15 AM	0	0	0	0	0	0	0	0	0	0	0	0	0	0	0	0	0
04:30 AM	0	0	0	0	0	0	0	0	0	0	0	0	0	0	0	0	0
04:45 AM	0	1	0	1	0	0	0	0	0	0	0	0	0	0	0	0	1
05:00 AM	0	**2**	0	**2**	0	0	0	0	0	0	0	0	0	0	0	0	**2**
Total Volume	0	3	0	3	0	0	0	0	0	0	0	0	0	0	0	0	3
% App. Total	0	100	0		0	0	0		0	0	0		0	0	0		
PHF	.000	.375	.000	.375	.000	.000	.000	.000	.000	.000	.000	.000	.000	.000	.000	.000	.375

Traffic Data Service

San Jose, CA
(408) 622-4787
tdsbay@cs.com

File Name : East Bay Tire 3-27-18 FINAL
Site Code : 00000001
Start Date : 3/27/2018
Page No : 3

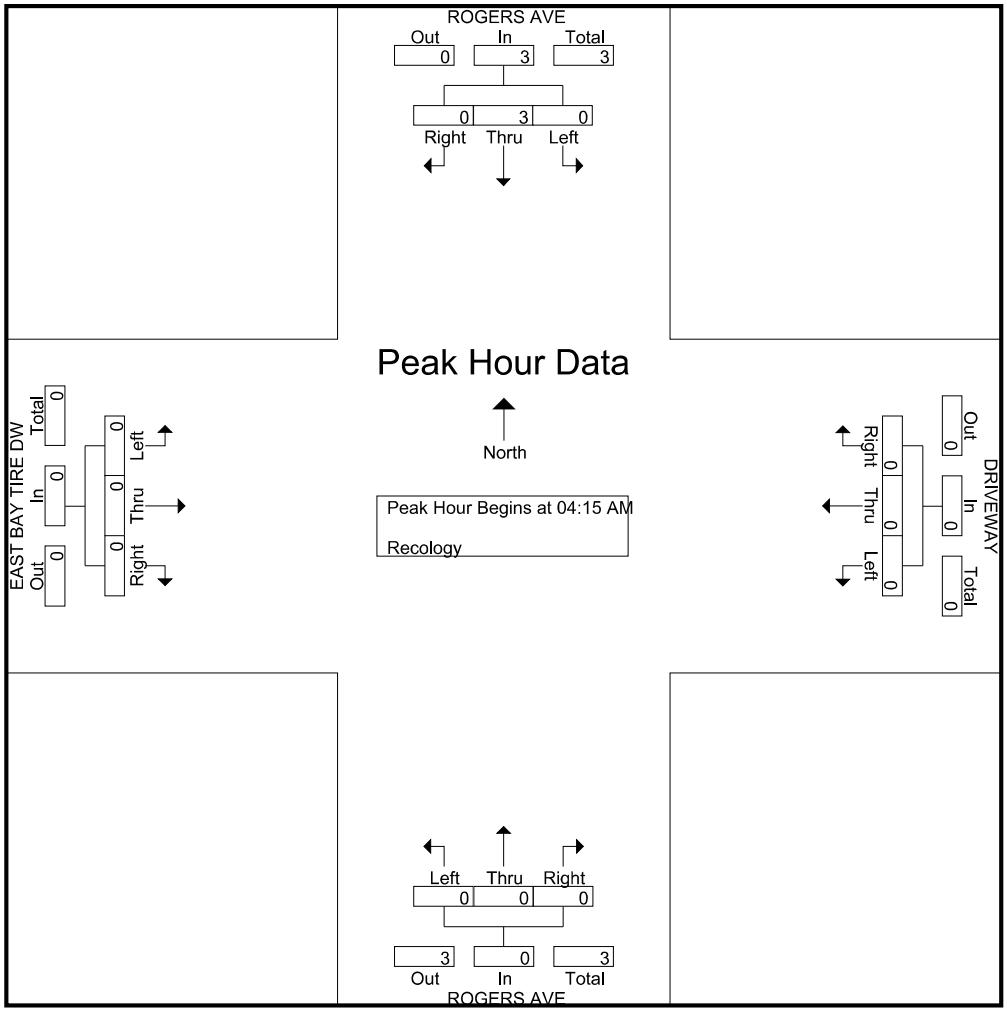

Traffic Data Service

San Jose, CA
(408) 622-4787
tdsbay@cs.com

File Name : East Bay Tire 3-28-18 FINAL
Site Code : 00000001
Start Date : 3/28/2018
Page No : 1

Groups Printed- Lights - East Bay Tire - Recology - Heavy

	ROGERS AVE Southbound					DRIVEWAY Westbound					ROGERS AVE Northbound					EAST BAY TIRE DW Eastbound					
Start Time	Right	Thru	Left	Peds	App. Total	Right	Thru	Left	Peds	App. Total	Right	Thru	Left	Peds	App. Total	Right	Thru	Left	Peds	App. Total	Int. Total
04:00 AM	0	10	2	0	12	1	0	1	0	2	1	2	0	0	3	0	0	0	0	0	17
04:15 AM	1	2	4	0	7	2	0	2	2	6	0	10	0	0	10	0	0	0	0	0	23
04:30 AM	0	1	0	0	1	2	0	2	0	4	2	8	0	0	10	0	0	0	0	0	15
04:45 AM	0	1	1	0	2	1	0	4	0	5	6	15	0	0	21	0	0	0	0	0	28
Total	1	14	7	0	22	6	0	9	2	17	9	35	0	0	44	0	0	0	0	0	83
05:00 AM	0	5	1	0	6	1	0	2	0	3	8	17	0	0	25	0	0	0	0	0	34
05:15 AM	0	8	0	0	8	2	0	2	0	4	6	26	0	0	32	1	0	0	0	1	45
05:30 AM	0	8	1	0	9	2	0	4	0	6	4	31	0	0	35	0	0	0	0	0	50
05:45 AM	0	11	0	0	11	1	0	5	0	6	2	57	0	0	59	0	0	0	0	0	76
Total	0	32	2	0	34	6	0	13	0	19	20	131	0	0	151	1	0	0	0	1	205
06:00 AM	0	14	1	0	15	2	0	6	0	8	1	44	0	0	45	0	0	0	0	0	68
06:15 AM	0	6	2	0	8	4	0	3	0	7	3	27	1	1	32	0	0	0	0	0	47
06:30 AM	1	24	2	2	29	0	0	1	0	1	1	31	0	0	32	0	0	0	0	0	62
06:45 AM	0	30	1	2	33	2	0	1	0	3	1	38	0	0	39	0	0	0	0	0	75
Total	1	74	6	4	85	8	0	11	0	19	6	140	1	1	148	0	0	0	0	0	252
07:00 AM	0	26	1	1	28	1	0	3	0	4	4	50	0	0	54	0	0	1	0	1	87
07:15 AM	1	17	1	1	20	1	0	4	1	6	3	49	2	0	54	0	0	0	0	0	80
07:30 AM	0	16	1	0	17	0	0	2	1	3	5	40	0	0	45	0	0	0	0	0	65
07:45 AM	0	23	0	0	23	1	0	4	0	5	3	68	3	0	74	1	0	0	0	1	103
Total	1	82	3	2	88	3	0	13	2	18	15	207	5	0	227	1	0	1	0	2	335
08:00 AM	0	33	1	0	34	1	0	3	0	4	4	73	2	0	79	1	0	0	0	1	118
08:15 AM	0	16	2	0	18	1	0	5	0	6	3	55	1	2	61	0	0	1	0	1	86
08:30 AM	0	27	1	0	28	3	0	4	0	7	1	44	0	0	45	1	0	0	0	1	81
08:45 AM	0	25	1	0	26	0	0	4	0	4	0	62	0	0	62	0	0	0	0	0	92
Total	0	101	5	0	106	5	0	16	0	21	8	234	3	2	247	2	0	1	0	3	377
09:00 AM	1	36	0	0	37	1	0	2	2	5	1	55	0	0	56	0	0	0	1	1	99
09:15 AM	1	21	1	0	23	0	0	2	1	3	0	72	0	0	72	0	0	0	0	0	98
09:30 AM	0	23	0	0	23	1	0	0	0	1	4	45	1	0	50	0	0	0	0	0	74
09:45 AM	0	21	0	0	21	1	0	1	0	2	2	49	1	0	52	0	0	0	0	0	75
Total	2	101	1	0	104	3	0	5	3	11	7	221	2	0	230	0	0	0	1	1	346
10:00 AM	0	19	0	0	19	1	0	2	0	3	1	39	3	0	43	2	0	0	0	2	67
10:15 AM	0	47	0	0	47	1	0	0	0	1	0	40	1	0	41	1	0	2	0	3	92
10:30 AM	2	34	2	0	38	0	0	0	0	0	1	49	0	0	50	0	0	1	0	1	89
10:45 AM	0	36	1	2	39	2	0	2	0	4	2	53	1	0	56	0	0	0	0	0	99
Total	2	136	3	2	143	4	0	4	0	8	4	181	5	0	190	3	0	3	0	6	347
11:00 AM	0	32	0	0	32	4	0	1	0	5	1	32	4	0	37	1	0	1	0	2	76
11:15 AM	0	43	0	0	43	1	0	0	0	1	0	49	0	0	49	1	0	0	0	1	94
11:30 AM	0	38	2	0	40	1	0	0	0	1	1	37	1	0	39	0	0	1	0	1	81
11:45 AM	0	18	1	0	19	0	0	1	0	1	1	38	2	0	41	1	0	1	0	2	63
Total	0	131	3	0	134	6	0	2	0	8	3	156	7	0	166	3	0	3	0	6	314
12:00 PM	0	41	1	0	42	0	0	2	0	2	2	27	0	0	29	0	0	0	0	0	73
12:15 PM	0	37	2	0	39	0	0	2	0	2	2	41	1	0	44	0	0	0	0	0	85
12:30 PM	1	31	5	1	38	1	0	2	2	5	6	42	0	0	48	1	0	0	0	1	92
12:45 PM	0	37	2	1	40	0	0	2	0	2	4	33	2	1	40	3	0	1	0	4	86
Total	1	146	10	2	159	1	0	8	2	11	14	143	3	1	161	4	0	1	0	5	336
01:00 PM	0	42	4	4	50	1	0	5	2	8	5	45	1	0	51	1	0	0	0	1	110
01:15 PM	1	26	4	1	32	1	0	5	0	6	5	36	1	0	42	0	0	0	1	1	81
01:30 PM	1	45	4	0	50	0	0	3	1	4	0	47	0	1	48	0	0	0	0	0	102
01:45 PM	0	35	7	1	43	3	0	3	0	6	4	37	1	0	42	0	0	1	0	1	92
Total	2	148	19	6	175	5	0	16	3	24	14	165	3	1	183	1	0	1	1	3	385

Traffic Data Service

San Jose, CA
(408) 622-4787
tdsbay@cs.com

File Name : East Bay Tire 3-28-18 FINAL
Site Code : 00000001
Start Date : 3/28/2018
Page No : 2

Groups Printed- Lights - East Bay Tire - Recology - Heavy

	ROGERS AVE Southbound					DRIVEWAY Westbound					ROGERS AVE Northbound					EAST BAY TIRE DW Eastbound					
Start Time	Right	Thru	Left	Peds	App. Total	Right	Thru	Left	Peds	App. Total	Right	Thru	Left	Peds	App. Total	Right	Thru	Left	Peds	App. Total	Int. Total
02:00 PM	1	57	0	4	62	1	0	8	0	9	7	35	0	1	43	2	0	0	1	3	117
02:15 PM	2	42	1	0	45	0	0	7	3	10	5	36	2	0	43	1	0	0	1	2	100
02:30 PM	1	56	1	5	63	3	0	5	3	11	3	39	1	2	45	1	0	0	0	1	120
02:45 PM	0	56	2	0	58	3	0	3	0	6	1	23	0	1	25	3	0	0	0	3	92
Total	4	211	4	9	228	7	0	23	6	36	16	133	3	4	156	7	0	0	2	9	429
03:00 PM	1	73	0	2	76	0	0	1	0	1	2	21	0	2	25	1	0	1	0	2	104
03:15 PM	0	52	3	0	55	3	0	5	0	8	1	22	0	1	24	1	0	1	0	2	89
03:30 PM	0	67	4	0	71	3	0	2	1	6	2	25	2	0	29	1	0	0	0	1	107
03:45 PM	1	55	3	2	61	1	0	2	0	3	0	34	0	0	34	0	0	0	0	0	98
Total	2	247	10	4	263	7	0	10	1	18	5	102	2	3	112	3	0	2	0	5	398
04:00 PM	0	71	1	0	72	1	0	6	0	7	4	35	0	1	40	1	0	0	0	1	120
04:15 PM	1	59	0	3	63	3	0	5	0	8	0	42	1	0	43	1	0	0	0	1	115
04:30 PM	2	75	2	0	79	0	0	5	1	6	0	22	0	0	22	1	0	1	0	2	109
04:45 PM	0	56	2	0	58	0	0	1	1	2	1	25	1	0	27	2	0	0	0	2	89
Total	3	261	5	3	272	4	0	17	2	23	5	124	2	1	132	5	0	1	0	6	433
05:00 PM	0	85	0	0	85	1	0	2	0	3	2	25	0	0	27	2	0	0	0	2	117
05:15 PM	0	82	0	0	82	1	0	2	1	4	2	15	0	0	17	0	0	0	1	1	104
05:30 PM	0	91	2	0	93	1	0	3	0	4	1	15	0	0	16	0	0	0	0	0	113
05:45 PM	0	66	1	0	67	1	0	0	2	3	0	15	0	0	15	0	0	0	0	0	85
Total	0	324	3	0	327	4	0	7	3	14	5	70	0	0	75	2	0	0	1	3	419
Grand Total	19	2008	81	32	2140	69	0	154	24	247	131	2042	36	13	2222	32	0	13	5	50	4659
Apprch %	0.9	93.8	3.8	1.5		27.9	0	62.3	9.7		5.9	91.9	1.6	0.6		64	0	26	10		
Total %	0.4	43.1	1.7	0.7	45.9	1.5	0	3.3	0.5	5.3	2.8	43.8	0.8	0.3	47.7	0.7	0	0.3	0.1	1.1	
Lights	9	1835	78	32	1954	66	0	154	24	244	131	1883	22	13	2049	17	0	6	5	28	4275
% Lights	47.4	91.4	96.3	100	91.3	95.7	0	100	100	98.8	100	92.2	61.1	100	92.2	53.1	0	46.2	100	56	91.8
East Bay Tire	6	0	0	0	6	0	0	0	0	0	0	0	6	0	6	8	0	4	0	12	24
% East Bay Tire	31.6	0	0	0	0.3	0	0	0	0	0	0	0	16.7	0	0.3	25	0	30.8	0	24	0.5
Recology	0	4	0	0	4	0	0	0	0	0	0	0	0	0	0	0	0	0	0	0	4
% Recology	0	0.2	0	0	0.2	0	0	0	0	0	0	0	0	0	0	0	0	0	0	0	0.1
Heavy	4	169	3	0	176	3	0	0	0	3	0	159	8	0	167	7	0	3	0	10	356
% Heavy	21.1	8.4	3.7	0	8.2	4.3	0	0	0	1.2	0	7.8	22.2	0	7.5	21.9	0	23.1	0	20	7.6

	ROGERS AVE Southbound				DRIVEWAY Westbound				ROGERS AVE Northbound				EAST BAY TIRE DW Eastbound				
Start Time	Right	Thru	Left	App. Total	Right	Thru	Left	App. Total	Right	Thru	Left	App. Total	Right	Thru	Left	App. Total	Int. Total
Peak Hour Analysis From 04:00 AM to 05:45 PM - Peak 1 of 1																	
Peak Hour for Entire Intersection Begins at 03:45 PM																	
03:45 PM	1	55	**3**	59	1	0	2	3	0	34	0	34	0	0	0	0	96
04:00 PM	0	71	1	72	1	0	**6**	7	**4**	35	0	39	**1**	0	0	1	**119**
04:15 PM	1	59	0	60	**3**	0	5	**8**	0	**42**	**1**	**43**	1	0	0	1	112
04:30 PM	**2**	**75**	2	**79**	0	0	5	5	0	22	0	22	1	0	**1**	**2**	108
Total Volume	4	260	6	270	5	0	18	23	4	133	1	138	3	0	1	4	435
% App. Total	1.5	96.3	2.2		21.7	0	78.3		2.9	96.4	0.7		75	0	25		
PHF	.500	.867	.500	.854	.417	.000	.750	.719	.250	.792	.250	.802	.750	.000	.250	.500	.914

Traffic Data Service

San Jose, CA
(408) 622-4787
tdsbay@cs.com

File Name : East Bay Tire 3-28-18 FINAL
Site Code : 00000001
Start Date : 3/28/2018
Page No : 3

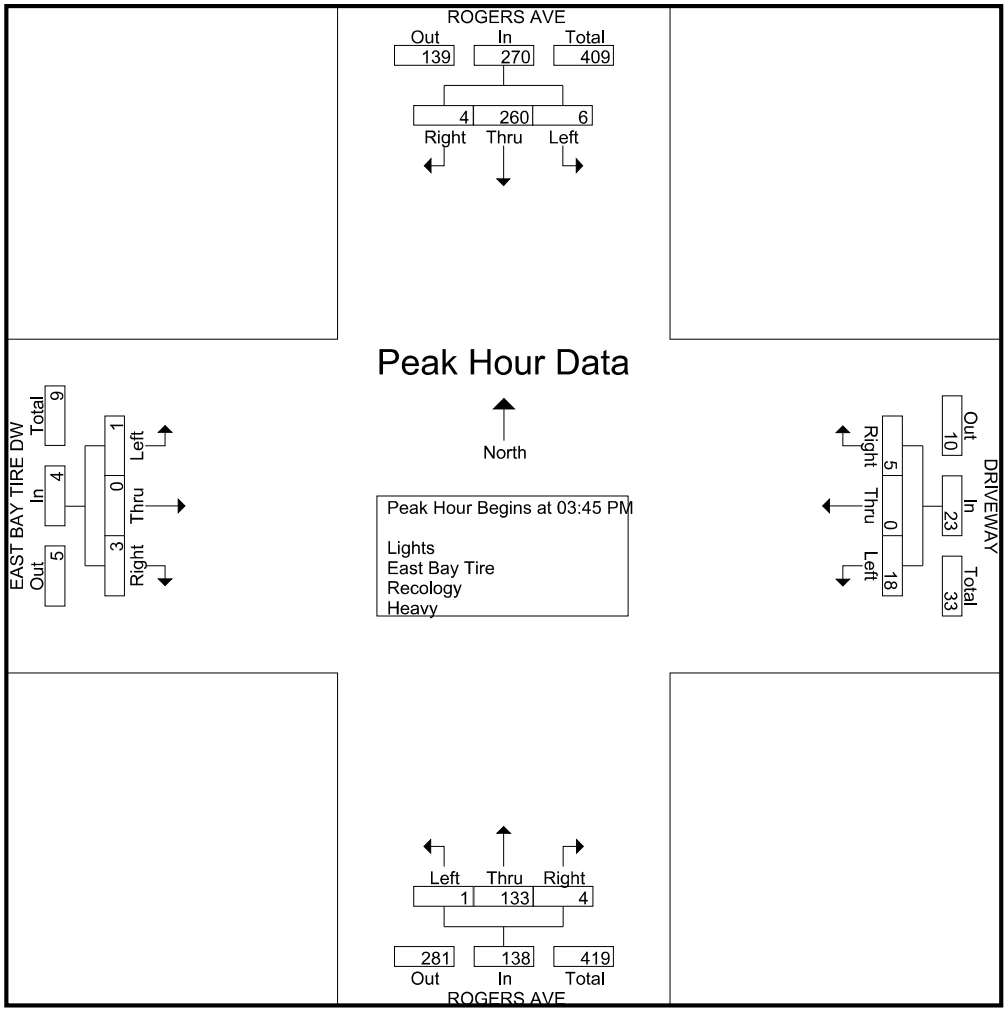

Traffic Data Service

San Jose, CA
(408) 622-4787
tdsbay@cs.com

File Name : East Bay Tire 3-28-18 FINAL
Site Code : 00000001
Start Date : 3/28/2018
Page No : 1

Groups Printed- East Bay Tire

	ROGERS AVE Southbound					DRIVEWAY Westbound					ROGERS AVE Northbound					EAST BAY TIRE DW Eastbound					
Start Time	Right	Thru	Left	Peds	App. Total	Right	Thru	Left	Peds	App. Total	Right	Thru	Left	Peds	App. Total	Right	Thru	Left	Peds	App. Total	Int. Total
04:00 AM	0	0	0	0	0	0	0	0	0	0	0	0	0	0	0	0	0	0	0	0	0
04:15 AM	0	0	0	0	0	0	0	0	0	0	0	0	0	0	0	0	0	0	0	0	0
04:30 AM	0	0	0	0	0	0	0	0	0	0	0	0	0	0	0	0	0	0	0	0	0
04:45 AM	0	0	0	0	0	0	0	0	0	0	0	0	0	0	0	0	0	0	0	0	0
Total	0	0	0	0	0	0	0	0	0	0	0	0	0	0	0	0	0	0	0	0	0
05:00 AM	0	0	0	0	0	0	0	0	0	0	0	0	0	0	0	0	0	0	0	0	0
05:15 AM	0	0	0	0	0	0	0	0	0	0	0	0	0	0	0	0	0	0	0	0	0
05:30 AM	0	0	0	0	0	0	0	0	0	0	0	0	0	0	0	0	0	0	0	0	0
05:45 AM	0	0	0	0	0	0	0	0	0	0	0	0	0	0	0	0	0	0	0	0	0
Total	0	0	0	0	0	0	0	0	0	0	0	0	0	0	0	0	0	0	0	0	0
06:00 AM	0	0	0	0	0	0	0	0	0	0	0	0	0	0	0	0	0	0	0	0	0
06:15 AM	0	0	0	0	0	0	0	0	0	0	0	0	0	0	0	0	0	0	0	0	0
06:30 AM	0	0	0	0	0	0	0	0	0	0	0	0	0	0	0	0	0	0	0	0	0
06:45 AM	0	0	0	0	0	0	0	0	0	0	0	0	0	0	0	0	0	0	0	0	0
Total	0	0	0	0	0	0	0	0	0	0	0	0	0	0	0	0	0	0	0	0	0
07:00 AM	0	0	0	0	0	0	0	0	0	0	0	0	0	0	0	0	0	1	0	1	1
07:15 AM	0	0	0	0	0	0	0	0	0	0	0	0	0	0	0	0	0	0	0	0	0
07:30 AM	0	0	0	0	0	0	0	0	0	0	0	0	0	0	0	0	0	0	0	0	0
07:45 AM	0	0	0	0	0	0	0	0	0	0	0	0	0	0	0	0	0	0	0	0	0
Total	0	0	0	0	0	0	0	0	0	0	0	0	0	0	0	0	0	1	0	1	1
08:00 AM	0	0	0	0	0	0	0	0	0	0	0	0	1	0	1	0	0	0	0	0	1
08:15 AM	0	0	0	0	0	0	0	0	0	0	0	0	1	0	1	0	0	0	0	0	1
08:30 AM	0	0	0	0	0	0	0	0	0	0	0	0	0	0	0	1	0	0	0	1	1
08:45 AM	0	0	0	0	0	0	0	0	0	0	0	0	0	0	0	0	0	0	0	0	0
Total	0	0	0	0	0	0	0	0	0	0	0	0	2	0	2	1	0	0	0	1	3
09:00 AM	0	0	0	0	0	0	0	0	0	0	0	0	0	0	0	0	0	0	0	0	0
09:15 AM	0	0	0	0	0	0	0	0	0	0	0	0	0	0	0	0	0	0	0	0	0
09:30 AM	0	0	0	0	0	0	0	0	0	0	0	0	0	0	0	0	0	0	0	0	0
09:45 AM	0	0	0	0	0	0	0	0	0	0	0	0	0	0	0	0	0	0	0	0	0
Total	0	0	0	0	0	0	0	0	0	0	0	0	0	0	0	0	0	0	0	0	0
10:00 AM	0	0	0	0	0	0	0	0	0	0	0	0	0	0	0	0	0	0	0	0	0
10:15 AM	0	0	0	0	0	0	0	0	0	0	0	0	0	0	0	0	0	1	0	1	1
10:30 AM	2	0	0	0	2	0	0	0	0	0	0	0	0	0	0	0	0	1	0	1	3
10:45 AM	0	0	0	0	0	0	0	0	0	0	0	0	0	0	0	0	0	0	0	0	0
Total	2	0	0	0	2	0	0	0	0	0	0	0	0	0	0	0	0	2	0	2	4
11:00 AM	0	0	0	0	0	0	0	0	0	0	0	0	0	0	0	0	0	0	0	0	0
11:15 AM	0	0	0	0	0	0	0	0	0	0	0	0	0	0	0	0	0	0	0	0	0
11:30 AM	0	0	0	0	0	0	0	0	0	0	0	0	1	0	1	0	0	1	0	1	2
11:45 AM	0	0	0	0	0	0	0	0	0	0	0	0	1	0	1	0	0	0	0	0	1
Total	0	0	0	0	0	0	0	0	0	0	0	0	2	0	2	0	0	1	0	1	3
12:00 PM	0	0	0	0	0	0	0	0	0	0	0	0	0	0	0	0	0	0	0	0	0
12:15 PM	0	0	0	0	0	0	0	0	0	0	0	0	0	0	0	0	0	0	0	0	0
12:30 PM	0	0	0	0	0	0	0	0	0	0	0	0	0	0	0	0	0	0	0	0	0
12:45 PM	0	0	0	0	0	0	0	0	0	0	0	0	1	0	1	2	0	0	0	2	3
Total	0	0	0	0	0	0	0	0	0	0	0	0	1	0	1	2	0	0	0	2	3
01:00 PM	0	0	0	0	0	0	0	0	0	0	0	0	0	0	0	0	0	0	0	0	0
01:15 PM	0	0	0	0	0	0	0	0	0	0	0	0	0	0	0	0	0	0	0	0	0
01:30 PM	0	0	0	0	0	0	0	0	0	0	0	0	0	0	0	0	0	0	0	0	0
01:45 PM	0	0	0	0	0	0	0	0	0	0	0	0	0	0	0	0	0	0	0	0	0
Total	0	0	0	0	0	0	0	0	0	0	0	0	0	0	0	0	0	0	0	0	0

Traffic Data Service

San Jose, CA
(408) 622-4787
tdsbay@cs.com

File Name : East Bay Tire 3-28-18 FINAL
Site Code : 00000001
Start Date : 3/28/2018
Page No : 2

Groups Printed- East Bay Tire

	ROGERS AVE Southbound					DRIVEWAY Westbound					ROGERS AVE Northbound					EAST BAY TIRE DW Eastbound					
Start Time	Right	Thru	Left	Peds	App. Total	Right	Thru	Left	Peds	App. Total	Right	Thru	Left	Peds	App. Total	Right	Thru	Left	Peds	App. Total	Int. Total
02:00 PM	1	0	0	0	1	0	0	0	0	0	0	0	0	0	0	1	0	0	0	1	2
02:15 PM	1	0	0	0	1	0	0	0	0	0	0	0	0	0	0	0	0	0	0	0	1
02:30 PM	0	0	0	0	0	0	0	0	0	0	0	0	1	0	1	0	0	0	0	0	1
02:45 PM	0	0	0	0	0	0	0	0	0	0	0	0	0	0	0	3	0	0	0	3	3
Total	2	0	0	0	2	0	0	0	0	0	0	0	1	0	1	4	0	0	0	4	7
03:00 PM	0	0	0	0	0	0	0	0	0	0	0	0	0	0	0	0	0	0	0	0	0
03:15 PM	0	0	0	0	0	0	0	0	0	0	0	0	0	0	0	0	0	0	0	0	0
03:30 PM	0	0	0	0	0	0	0	0	0	0	0	0	0	0	0	0	0	0	0	0	0
03:45 PM	1	0	0	0	1	0	0	0	0	0	0	0	0	0	0	0	0	0	0	0	1
Total	1	0	0	0	1	0	0	0	0	0	0	0	0	0	0	0	0	0	0	0	1
04:00 PM	0	0	0	0	0	0	0	0	0	0	0	0	0	0	0	1	0	0	0	1	1
04:15 PM	0	0	0	0	0	0	0	0	0	0	0	0	0	0	0	0	0	0	0	0	0
04:30 PM	1	0	0	0	1	0	0	0	0	0	0	0	0	0	0	0	0	0	0	0	1
04:45 PM	0	0	0	0	0	0	0	0	0	0	0	0	0	0	0	0	0	0	0	0	0
Total	1	0	0	0	1	0	0	0	0	0	0	0	0	0	0	1	0	0	0	1	2
05:00 PM	0	0	0	0	0	0	0	0	0	0	0	0	0	0	0	0	0	0	0	0	0
05:15 PM	0	0	0	0	0	0	0	0	0	0	0	0	0	0	0	0	0	0	0	0	0
05:30 PM	0	0	0	0	0	0	0	0	0	0	0	0	0	0	0	0	0	0	0	0	0
05:45 PM	0	0	0	0	0	0	0	0	0	0	0	0	0	0	0	0	0	0	0	0	0
Total	0	0	0	0	0	0	0	0	0	0	0	0	0	0	0	0	0	0	0	0	0
Grand Total	6	0	0	0	6	0	0	0	0	0	0	0	6	0	6	8	0	4	0	12	24
Apprch %	100	0	0	0		0	0	0	0		0	0	100	0		66.7	0	33.3	0		
Total %	25	0	0	0	25	0	0	0	0	0	0	0	25	0	25	33.3	0	16.7	0	50	

	ROGERS AVE Southbound				DRIVEWAY Westbound				ROGERS AVE Northbound				EAST BAY TIRE DW Eastbound				
Start Time	Right	Thru	Left	App. Total	Right	Thru	Left	App. Total	Right	Thru	Left	App. Total	Right	Thru	Left	App. Total	Int. Total
Peak Hour Analysis From 04:00 AM to 05:45 PM - Peak 1 of 1																	
Peak Hour for Entire Intersection Begins at 02:00 PM																	
02:00 PM	**1**	0	0	**1**	0	0	0	0	0	0	0	0	1	0	0	1	2
02:15 PM	1	0	0	1	0	0	0	0	0	0	0	0	0	0	0	0	1
02:30 PM	0	0	0	0	0	0	0	0	0	0	**1**	**1**	0	0	0	0	1
02:45 PM	0	0	0	0	0	0	0	0	0	0	0	0	**3**	0	0	**3**	**3**
Total Volume	2	0	0	2	0	0	0	0	0	0	1	1	4	0	0	4	7
% App. Total	100	0	0		0	0	0		0	0	100		100	0	0		
PHF	.500	.000	.000	.500	.000	.000	.000	.000	.000	.000	.250	.250	.333	.000	.000	.333	.583

Traffic Data Service

San Jose, CA
(408) 622-4787
tdsbay@cs.com

File Name : East Bay Tire 3-28-18 FINAL
Site Code : 00000001
Start Date : 3/28/2018
Page No : 3

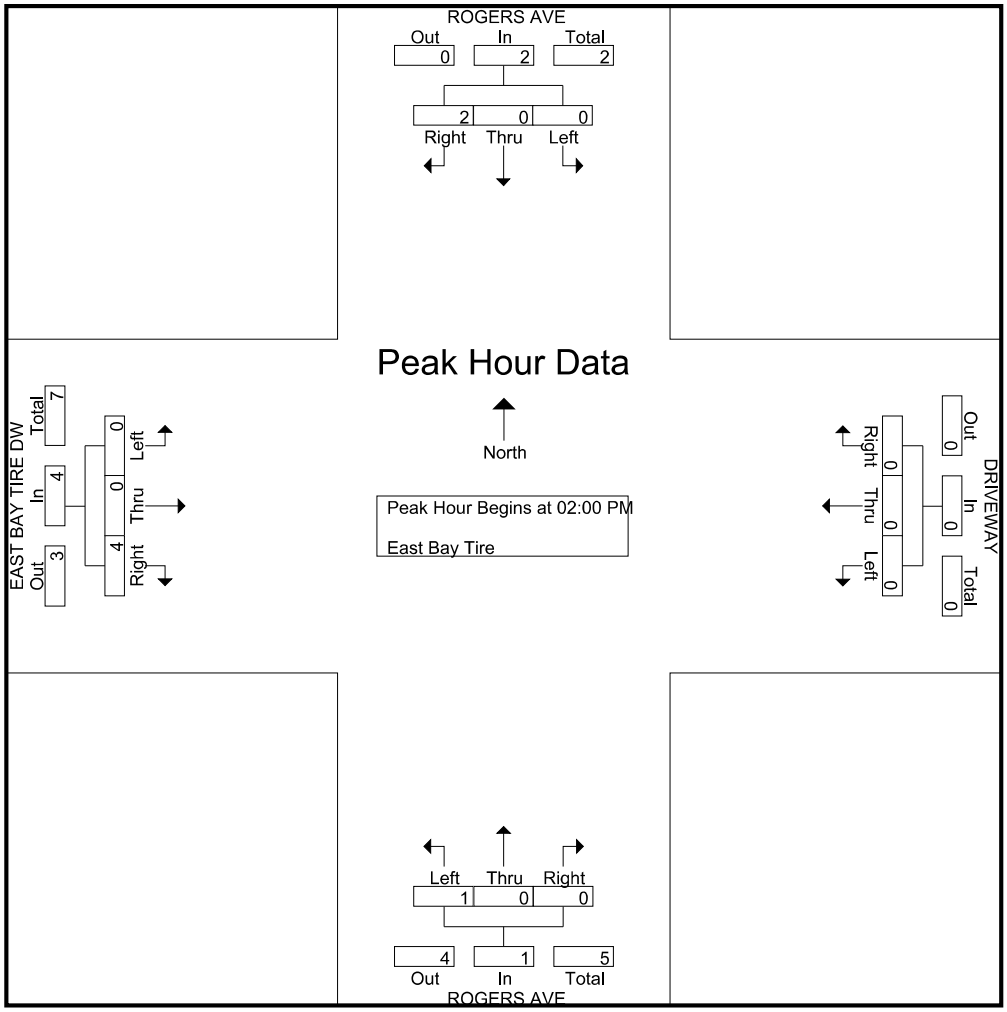

Traffic Data Service

San Jose, CA
(408) 622-4787
tdsbay@cs.com

File Name : East Bay Tire 3-28-18 FINAL
Site Code : 00000001
Start Date : 3/28/2018
Page No : 1

Groups Printed- Heavy

	ROGERS AVE Southbound					DRIVEWAY Westbound					ROGERS AVE Northbound					EAST BAY TIRE DW Eastbound					
Start Time	Right	Thru	Left	Peds	App. Total	Right	Thru	Left	Peds	App. Total	Right	Thru	Left	Peds	App. Total	Right	Thru	Left	Peds	App. Total	Int. Total
04:00 AM	0	1	0	0	1	0	0	0	0	0	0	0	0	0	0	0	0	0	0	0	1
04:15 AM	0	0	0	0	0	0	0	0	0	0	0	2	0	0	2	0	0	0	0	0	2
04:30 AM	0	0	0	0	0	0	0	0	0	0	0	1	0	0	1	0	0	0	0	0	1
04:45 AM	0	1	0	0	1	0	0	0	0	0	0	1	0	0	1	0	0	0	0	0	2
Total	0	2	0	0	2	0	0	0	0	0	0	4	0	0	4	0	0	0	0	0	6
05:00 AM	0	1	0	0	1	0	0	0	0	0	0	1	0	0	1	0	0	0	0	0	2
05:15 AM	0	1	0	0	1	0	0	0	0	0	0	0	0	0	0	0	0	0	0	0	1
05:30 AM	0	2	0	0	2	0	0	0	0	0	0	3	0	0	3	0	0	0	0	0	5
05:45 AM	0	2	0	0	2	0	0	0	0	0	0	2	0	0	2	0	0	0	0	0	4
Total	0	6	0	0	6	0	0	0	0	0	0	6	0	0	6	0	0	0	0	0	12
06:00 AM	0	3	0	0	3	0	0	0	0	0	0	1	0	0	1	0	0	0	0	0	4
06:15 AM	0	0	0	0	0	0	0	0	0	0	0	1	1	0	2	0	0	0	0	0	2
06:30 AM	0	6	0	0	6	0	0	0	0	0	0	1	0	0	1	0	0	0	0	0	7
06:45 AM	0	3	0	0	3	0	0	0	0	0	0	2	0	0	2	0	0	0	0	0	5
Total	0	12	0	0	12	0	0	0	0	0	0	5	1	0	6	0	0	0	0	0	18
07:00 AM	0	5	0	0	5	0	0	0	0	0	0	1	0	0	1	0	0	0	0	0	6
07:15 AM	0	0	0	0	0	0	0	0	0	0	0	5	0	0	5	0	0	0	0	0	5
07:30 AM	0	2	0	0	2	0	0	0	0	0	0	1	0	0	1	0	0	0	0	0	3
07:45 AM	0	4	0	0	4	0	0	0	0	0	0	2	0	0	2	1	0	0	0	1	7
Total	0	11	0	0	11	0	0	0	0	0	0	9	0	0	9	1	0	0	0	1	21
08:00 AM	0	9	0	0	9	0	0	0	0	0	0	2	0	0	2	1	0	0	0	1	12
08:15 AM	0	2	0	0	2	0	0	0	0	0	0	4	0	0	4	0	0	0	0	0	6
08:30 AM	0	4	0	0	4	0	0	0	0	0	0	2	0	0	2	0	0	0	0	0	6
08:45 AM	0	4	0	0	4	0	0	0	0	0	0	3	0	0	3	0	0	0	0	0	7
Total	0	19	0	0	19	0	0	0	0	0	0	11	0	0	11	1	0	0	0	1	31
09:00 AM	1	4	0	0	5	0	0	0	0	0	0	4	0	0	4	0	0	0	0	0	9
09:15 AM	0	3	1	0	4	0	0	0	0	0	0	6	0	0	6	0	0	0	0	0	10
09:30 AM	0	3	0	0	3	1	0	0	0	1	0	4	0	0	4	0	0	0	0	0	8
09:45 AM	0	1	0	0	1	0	0	0	0	0	0	6	0	0	6	0	0	0	0	0	7
Total	1	11	1	0	13	1	0	0	0	1	0	20	0	0	20	0	0	0	0	0	34
10:00 AM	0	1	0	0	1	0	0	0	0	0	0	4	0	0	4	0	0	0	0	0	5
10:15 AM	0	5	0	0	5	0	0	0	0	0	0	7	1	0	8	1	0	0	0	1	14
10:30 AM	0	3	1	0	4	0	0	0	0	0	0	3	0	0	3	0	0	0	0	0	7
10:45 AM	0	4	1	0	5	1	0	0	0	1	0	5	1	0	6	0	0	0	0	0	12
Total	0	13	2	0	15	1	0	0	0	1	0	19	2	0	21	1	0	0	0	1	38
11:00 AM	0	4	0	0	4	1	0	0	0	1	0	4	1	0	5	0	0	1	0	1	11
11:15 AM	0	5	0	0	5	0	0	0	0	0	0	8	0	0	8	1	0	0	0	1	14
11:30 AM	0	8	0	0	8	0	0	0	0	0	0	3	0	0	3	0	0	0	0	0	11
11:45 AM	0	2	0	0	2	0	0	0	0	0	0	4	1	0	5	0	0	0	0	0	7
Total	0	19	0	0	19	1	0	0	0	1	0	19	2	0	21	1	0	1	0	2	43
12:00 PM	0	6	0	0	6	0	0	0	0	0	0	3	0	0	3	0	0	0	0	0	9
12:15 PM	0	4	0	0	4	0	0	0	0	0	0	5	0	0	5	0	0	0	0	0	9
12:30 PM	0	4	0	0	4	0	0	0	0	0	0	3	0	0	3	0	0	0	0	0	7
12:45 PM	0	4	0	0	4	0	0	0	0	0	0	6	0	0	6	0	0	0	0	0	10
Total	0	18	0	0	18	0	0	0	0	0	0	17	0	0	17	0	0	0	0	0	35
01:00 PM	0	5	0	0	5	0	0	0	0	0	0	7	0	0	7	0	0	0	0	0	12
01:15 PM	0	3	0	0	3	0	0	0	0	0	0	10	0	0	10	0	0	0	0	0	13
01:30 PM	0	3	0	0	3	0	0	0	0	0	0	4	0	0	4	0	0	0	0	0	7
01:45 PM	0	4	0	0	4	0	0	0	0	0	0	4	0	0	4	0	0	0	0	0	8
Total	0	15	0	0	15	0	0	0	0	0	0	25	0	0	25	0	0	0	0	0	40

Traffic Data Service

San Jose, CA
(408) 622-4787
tdsbay@cs.com

File Name : East Bay Tire 3-28-18 FINAL
Site Code : 00000001
Start Date : 3/28/2018
Page No : 2

Groups Printed- Heavy

	ROGERS AVE Southbound					DRIVEWAY Westbound					ROGERS AVE Northbound					EAST BAY TIRE DW Eastbound					
Start Time	Right	Thru	Left	Peds	App. Total	Right	Thru	Left	Peds	App. Total	Right	Thru	Left	Peds	App. Total	Right	Thru	Left	Peds	App. Total	Int. Total
02:00 PM	0	4	0	0	4	0	0	0	0	0	0	5	0	0	5	0	0	0	0	0	9
02:15 PM	1	3	0	0	4	0	0	0	0	0	0	4	1	0	5	0	0	0	0	0	9
02:30 PM	1	3	0	0	4	0	0	0	0	0	0	2	0	0	2	1	0	0	0	1	7
02:45 PM	0	3	0	0	3	0	0	0	0	0	0	2	0	0	2	0	0	0	0	0	5
Total	2	13	0	0	15	0	0	0	0	0	0	13	1	0	14	1	0	0	0	1	30
03:00 PM	0	4	0	0	4	0	0	0	0	0	0	0	0	0	0	0	0	1	0	1	5
03:15 PM	0	2	0	0	2	0	0	0	0	0	0	2	0	0	2	0	0	1	0	1	5
03:30 PM	0	2	0	0	2	0	0	0	0	0	0	1	0	0	1	0	0	0	0	0	3
03:45 PM	0	2	0	0	2	0	0	0	0	0	0	1	0	0	1	0	0	0	0	0	3
Total	0	10	0	0	10	0	0	0	0	0	0	4	0	0	4	0	0	2	0	2	16
04:00 PM	0	5	0	0	5	0	0	0	0	0	0	2	0	0	2	0	0	0	0	0	7
04:15 PM	1	1	0	0	2	0	0	0	0	0	0	2	1	0	3	1	0	0	0	1	6
04:30 PM	0	3	0	0	3	0	0	0	0	0	0	1	0	0	1	0	0	0	0	0	4
04:45 PM	0	3	0	0	3	0	0	0	0	0	0	1	1	0	2	1	0	0	0	1	6
Total	1	12	0	0	13	0	0	0	0	0	0	6	2	0	8	2	0	0	0	2	23
05:00 PM	0	4	0	0	4	0	0	0	0	0	0	0	0	0	0	0	0	0	0	0	4
05:15 PM	0	2	0	0	2	0	0	0	0	0	0	0	0	0	0	0	0	0	0	0	2
05:30 PM	0	0	0	0	0	0	0	0	0	0	0	0	0	0	0	0	0	0	0	0	0
05:45 PM	0	2	0	0	2	0	0	0	0	0	0	1	0	0	1	0	0	0	0	0	3
Total	0	8	0	0	8	0	0	0	0	0	0	1	0	0	1	0	0	0	0	0	9
Grand Total	4	169	3	0	176	3	0	0	0	3	0	159	8	0	167	7	0	3	0	10	356
Apprch %	2.3	96	1.7	0		100	0	0	0		0	95.2	4.8	0		70	0	30	0		
Total %	1.1	47.5	0.8	0	49.4	0.8	0	0	0	0.8	0	44.7	2.2	0	46.9	2	0	0.8	0	2.8	

	ROGERS AVE Southbound				DRIVEWAY Westbound				ROGERS AVE Northbound				EAST BAY TIRE DW Eastbound				
Start Time	Right	Thru	Left	App. Total	Right	Thru	Left	App. Total	Right	Thru	Left	App. Total	Right	Thru	Left	App. Total	Int. Total
Peak Hour Analysis From 04:00 AM to 05:45 PM - Peak 1 of 1																	
Peak Hour for Entire Intersection Begins at 10:45 AM																	
10:45 AM	0	4	**1**	5	**1**	0	0	**1**	0	5	**1**	6	0	0	0	0	12
11:00 AM	0	4	0	4	1	0	0	1	0	4	1	5	0	0	**1**	**1**	11
11:15 AM	0	5	0	5	0	0	0	0	0	**8**	0	**8**	**1**	0	0	1	**14**
11:30 AM	0	**8**	0	**8**	0	0	0	0	0	3	0	3	0	0	0	0	11
Total Volume	0	21	1	22	2	0	0	2	0	20	2	22	1	0	1	2	48
% App. Total	0	95.5	4.5		100	0	0		0	90.9	9.1		50	0	50		
PHF	.000	.656	.250	.688	.500	.000	.000	.500	.000	.625	.500	.688	.250	.000	.250	.500	.857

Traffic Data Service

San Jose, CA
(408) 622-4787
tdsbay@cs.com

File Name : East Bay Tire 3-28-18 FINAL
Site Code : 00000001
Start Date : 3/28/2018
Page No : 3

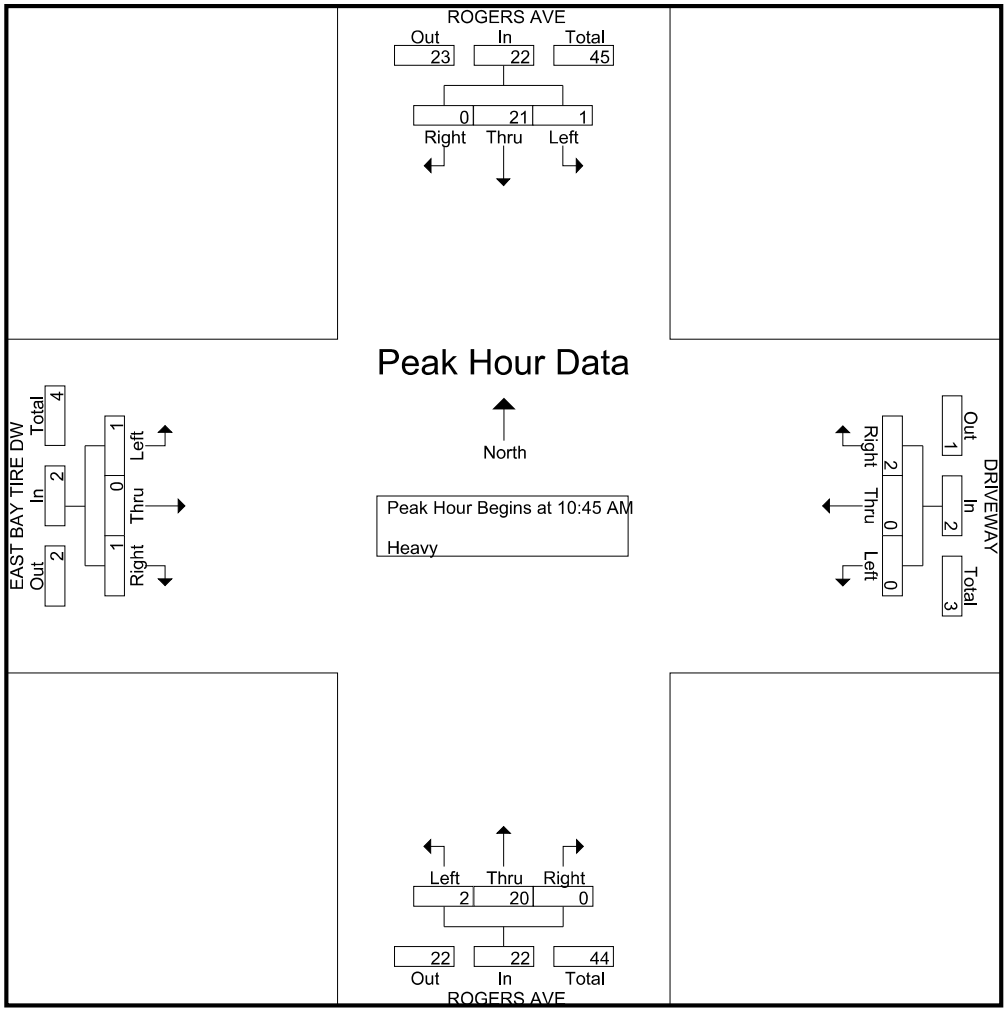

Traffic Data Service

San Jose, CA
(408) 622-4787
tdsbay@cs.com

File Name : East Bay Tire 3-28-18 FINAL
Site Code : 00000001
Start Date : 3/28/2018
Page No : 1

Groups Printed- Lights

	ROGERS AVE Southbound					DRIVEWAY Westbound					ROGERS AVE Northbound					EAST BAY TIRE DW Eastbound					
Start Time	Right	Thru	Left	Peds	App. Total	Right	Thru	Left	Peds	App. Total	Right	Thru	Left	Peds	App. Total	Right	Thru	Left	Peds	App. Total	Int. Total
04:00 AM	0	9	2	0	11	1	0	1	0	2	1	2	0	0	3	0	0	0	0	0	16
04:15 AM	1	2	4	0	7	2	0	2	2	6	0	8	0	0	8	0	0	0	0	0	21
04:30 AM	0	1	0	0	1	2	0	2	0	4	2	7	0	0	9	0	0	0	0	0	14
04:45 AM	0	0	1	0	1	1	0	4	0	5	6	14	0	0	20	0	0	0	0	0	26
Total	1	12	7	0	20	6	0	9	2	17	9	31	0	0	40	0	0	0	0	0	77
05:00 AM	0	4	1	0	5	1	0	2	0	3	8	16	0	0	24	0	0	0	0	0	32
05:15 AM	0	6	0	0	6	2	0	2	0	4	6	26	0	0	32	1	0	0	0	1	43
05:30 AM	0	5	1	0	6	2	0	4	0	6	4	28	0	0	32	0	0	0	0	0	44
05:45 AM	0	9	0	0	9	1	0	5	0	6	2	55	0	0	57	0	0	0	0	0	72
Total	0	24	2	0	26	6	0	13	0	19	20	125	0	0	145	1	0	0	0	1	191
06:00 AM	0	11	1	0	12	2	0	6	0	8	1	43	0	0	44	0	0	0	0	0	64
06:15 AM	0	6	2	0	8	4	0	3	0	7	3	26	0	1	30	0	0	0	0	0	45
06:30 AM	1	18	2	2	23	0	0	1	0	1	1	30	0	0	31	0	0	0	0	0	55
06:45 AM	0	27	1	2	30	2	0	1	0	3	1	36	0	0	37	0	0	0	0	0	70
Total	1	62	6	4	73	8	0	11	0	19	6	135	0	1	142	0	0	0	0	0	234
07:00 AM	0	21	1	1	23	1	0	3	0	4	4	49	0	0	53	0	0	0	0	0	80
07:15 AM	1	17	1	1	20	1	0	4	1	6	3	44	2	0	49	0	0	0	0	0	75
07:30 AM	0	14	1	0	15	0	0	2	1	3	5	39	0	0	44	0	0	0	0	0	62
07:45 AM	0	19	0	0	19	1	0	4	0	5	3	66	3	0	72	0	0	0	0	0	96
Total	1	71	3	2	77	3	0	13	2	18	15	198	5	0	218	0	0	0	0	0	313
08:00 AM	0	24	1	0	25	1	0	3	0	4	4	71	1	0	76	0	0	0	0	0	105
08:15 AM	0	14	2	0	16	1	0	5	0	6	3	51	0	2	56	0	0	1	0	1	79
08:30 AM	0	23	1	0	24	3	0	4	0	7	1	42	0	0	43	0	0	0	0	0	74
08:45 AM	0	21	1	0	22	0	0	4	0	4	0	59	0	0	59	0	0	0	0	0	85
Total	0	82	5	0	87	5	0	16	0	21	8	223	1	2	234	0	0	1	0	1	343
09:00 AM	0	32	0	0	32	1	0	2	2	5	1	51	0	0	52	0	0	0	1	1	90
09:15 AM	1	18	0	0	19	0	0	2	1	3	0	66	0	0	66	0	0	0	0	0	88
09:30 AM	0	20	0	0	20	0	0	0	0	0	4	41	1	0	46	0	0	0	0	0	66
09:45 AM	0	19	0	0	19	1	0	1	0	2	2	43	1	0	46	0	0	0	0	0	67
Total	1	89	0	0	90	2	0	5	3	10	7	201	2	0	210	0	0	0	1	1	311
10:00 AM	0	18	0	0	18	1	0	2	0	3	1	35	3	0	39	2	0	0	0	2	62
10:15 AM	0	41	0	0	41	1	0	0	0	1	0	33	0	0	33	0	0	1	0	1	76
10:30 AM	0	31	1	0	32	0	0	0	0	0	1	46	0	0	47	0	0	0	0	0	79
10:45 AM	0	32	0	2	34	1	0	2	0	3	2	48	0	0	50	0	0	0	0	0	87
Total	0	122	1	2	125	3	0	4	0	7	4	162	3	0	169	2	0	1	0	3	304
11:00 AM	0	28	0	0	28	3	0	1	0	4	1	28	3	0	32	1	0	0	0	1	65
11:15 AM	0	38	0	0	38	1	0	0	0	1	0	41	0	0	41	0	0	0	0	0	80
11:30 AM	0	30	2	0	32	1	0	0	0	1	1	34	0	0	35	0	0	0	0	0	68
11:45 AM	0	16	1	0	17	0	0	1	0	1	1	34	0	0	35	1	0	1	0	2	55
Total	0	112	3	0	115	5	0	2	0	7	3	137	3	0	143	2	0	1	0	3	268
12:00 PM	0	35	1	0	36	0	0	2	0	2	2	24	0	0	26	0	0	0	0	0	64
12:15 PM	0	33	2	0	35	0	0	2	0	2	2	36	1	0	39	0	0	0	0	0	76
12:30 PM	1	27	5	1	34	1	0	2	2	5	6	39	0	0	45	1	0	0	0	1	85
12:45 PM	0	33	2	1	36	0	0	2	0	2	4	27	1	1	33	1	0	1	0	2	73
Total	1	128	10	2	141	1	0	8	2	11	14	126	2	1	143	2	0	1	0	3	298
01:00 PM	0	37	4	4	45	1	0	5	2	8	5	38	1	0	44	1	0	0	0	1	98
01:15 PM	1	23	4	1	29	1	0	5	0	6	5	26	1	0	32	0	0	0	1	1	68
01:30 PM	1	42	4	0	47	0	0	3	1	4	0	43	0	1	44	0	0	0	0	0	95
01:45 PM	0	31	7	1	39	3	0	3	0	6	4	33	1	0	38	0	0	1	0	1	84
Total	2	133	19	6	160	5	0	16	3	24	14	140	3	1	158	1	0	1	1	3	345

Traffic Data Service

San Jose, CA
(408) 622-4787
tdsbay@cs.com

File Name : East Bay Tire 3-28-18 FINAL
Site Code : 00000001
Start Date : 3/28/2018
Page No : 2

Groups Printed- Lights

	ROGERS AVE Southbound					DRIVEWAY Westbound					ROGERS AVE Northbound					EAST BAY TIRE DW Eastbound					
Start Time	Right	Thru	Left	Peds	App. Total	Right	Thru	Left	Peds	App. Total	Right	Thru	Left	Peds	App. Total	Right	Thru	Left	Peds	App. Total	Int. Total
02:00 PM	0	53	0	4	57	1	0	8	0	9	7	30	0	1	38	1	0	0	1	2	106
02:15 PM	0	39	1	0	40	0	0	7	3	10	5	32	1	0	38	1	0	0	1	2	90
02:30 PM	0	53	1	5	59	3	0	5	3	11	3	37	0	2	42	0	0	0	0	0	112
02:45 PM	0	53	2	0	55	3	0	3	0	6	1	21	0	1	23	0	0	0	0	0	84
Total	0	198	4	9	211	7	0	23	6	36	16	120	1	4	141	2	0	0	2	4	392
03:00 PM	1	69	0	2	72	0	0	1	0	1	2	21	0	2	25	1	0	0	0	1	99
03:15 PM	0	50	3	0	53	3	0	5	0	8	1	20	0	1	22	1	0	0	0	1	84
03:30 PM	0	65	4	0	69	3	0	2	1	6	2	24	2	0	28	1	0	0	0	1	104
03:45 PM	0	53	3	2	58	1	0	2	0	3	0	33	0	0	33	0	0	0	0	0	94
Total	1	237	10	4	252	7	0	10	1	18	5	98	2	3	108	3	0	0	0	3	381
04:00 PM	0	66	1	0	67	1	0	6	0	7	4	33	0	1	38	0	0	0	0	0	112
04:15 PM	0	58	0	3	61	3	0	5	0	8	0	40	0	0	40	0	0	0	0	0	109
04:30 PM	1	72	2	0	75	0	0	5	1	6	0	21	0	0	21	1	0	1	0	2	104
04:45 PM	0	53	2	0	55	0	0	1	1	2	1	24	0	0	25	1	0	0	0	1	83
Total	1	249	5	3	258	4	0	17	2	23	5	118	0	1	124	2	0	1	0	3	408
05:00 PM	0	81	0	0	81	1	0	2	0	3	2	25	0	0	27	2	0	0	0	2	113
05:15 PM	0	80	0	0	80	1	0	2	1	4	2	15	0	0	17	0	0	0	1	1	102
05:30 PM	0	91	2	0	93	1	0	3	0	4	1	15	0	0	16	0	0	0	0	0	113
05:45 PM	0	64	1	0	65	1	0	0	2	3	0	14	0	0	14	0	0	0	0	0	82
Total	0	316	3	0	319	4	0	7	3	14	5	69	0	0	74	2	0	0	1	3	410
Grand Total	9	1835	78	32	1954	66	0	154	24	244	131	1883	22	13	2049	17	0	6	5	28	4275
Apprch %	0.5	93.9	4	1.6		27	0	63.1	9.8		6.4	91.9	1.1	0.6		60.7	0	21.4	17.9		
Total %	0.2	42.9	1.8	0.7	45.7	1.5	0	3.6	0.6	5.7	3.1	44	0.5	0.3	47.9	0.4	0	0.1	0.1	0.7	

	ROGERS AVE Southbound				DRIVEWAY Westbound				ROGERS AVE Northbound				EAST BAY TIRE DW Eastbound				
Start Time	Right	Thru	Left	App. Total	Right	Thru	Left	App. Total	Right	Thru	Left	App. Total	Right	Thru	Left	App. Total	Int. Total
Peak Hour Analysis From 04:00 AM to 05:45 PM - Peak 1 of 1																	
Peak Hour for Entire Intersection Begins at 03:30 PM																	
03:30 PM	0	65	**4**	**69**	**3**	0	2	5	2	24	**2**	28	**1**	0	0	**1**	103
03:45 PM	0	53	3	56	1	0	2	3	0	33	0	33	0	0	0	0	92
04:00 PM	0	**66**	1	67	1	0	**6**	7	**4**	33	0	37	0	0	0	0	**111**
04:15 PM	0	58	0	58	3	0	5	**8**	0	**40**	0	**40**	0	0	0	0	106
Total Volume	0	242	8	250	8	0	15	23	6	130	2	138	1	0	0	1	412
% App. Total	0	96.8	3.2		34.8	0	65.2		4.3	94.2	1.4		100	0	0		
PHF	.000	.917	.500	.906	.667	.000	.625	.719	.375	.813	.250	.863	.250	.000	.000	.250	.928

Traffic Data Service

San Jose, CA
(408) 622-4787
tdsbay@cs.com

File Name : East Bay Tire 3-28-18 FINAL
Site Code : 00000001
Start Date : 3/28/2018
Page No : 3

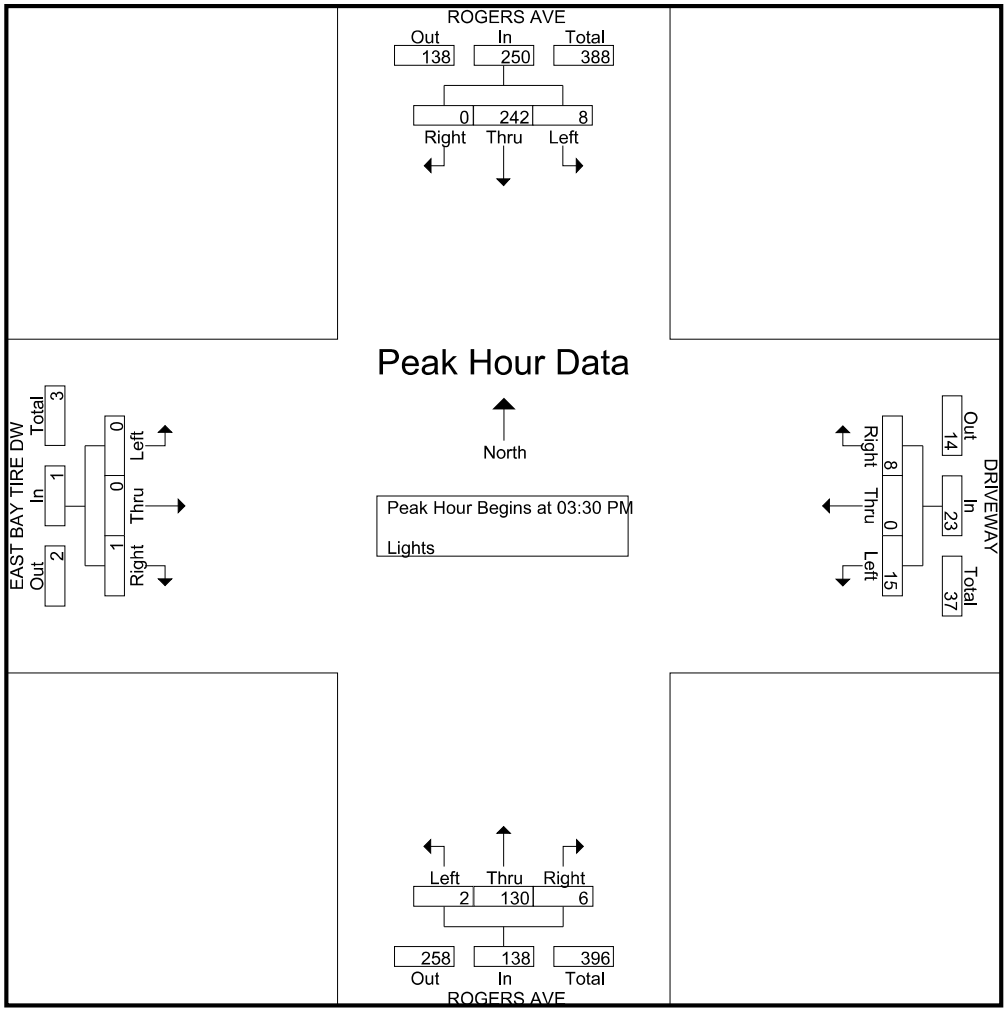

Traffic Data Service

San Jose, CA
(408) 622-4787
tdsbay@cs.com

File Name : East Bay Tire 3-28-18 FINAL
Site Code : 00000001
Start Date : 3/28/2018
Page No : 1

Groups Printed- Recology

	ROGERS AVE Southbound					DRIVEWAY Westbound					ROGERS AVE Northbound					EAST BAY TIRE DW Eastbound					
Start Time	Right	Thru	Left	Peds	App. Total	Right	Thru	Left	Peds	App. Total	Right	Thru	Left	Peds	App. Total	Right	Thru	Left	Peds	App. Total	Int. Total
04:00 AM	0	0	0	0	0	0	0	0	0	0	0	0	0	0	0	0	0	0	0	0	0
04:15 AM	0	0	0	0	0	0	0	0	0	0	0	0	0	0	0	0	0	0	0	0	0
04:30 AM	0	0	0	0	0	0	0	0	0	0	0	0	0	0	0	0	0	0	0	0	0
04:45 AM	0	0	0	0	0	0	0	0	0	0	0	0	0	0	0	0	0	0	0	0	0
Total	0	0	0	0	0	0	0	0	0	0	0	0	0	0	0	0	0	0	0	0	0
05:00 AM	0	0	0	0	0	0	0	0	0	0	0	0	0	0	0	0	0	0	0	0	0
05:15 AM	0	1	0	0	1	0	0	0	0	0	0	0	0	0	0	0	0	0	0	0	1
05:30 AM	0	1	0	0	1	0	0	0	0	0	0	0	0	0	0	0	0	0	0	0	1
05:45 AM	0	0	0	0	0	0	0	0	0	0	0	0	0	0	0	0	0	0	0	0	0
Total	0	2	0	0	2	0	0	0	0	0	0	0	0	0	0	0	0	0	0	0	2
06:00 AM	0	0	0	0	0	0	0	0	0	0	0	0	0	0	0	0	0	0	0	0	0
06:15 AM	0	0	0	0	0	0	0	0	0	0	0	0	0	0	0	0	0	0	0	0	0
06:30 AM	0	0	0	0	0	0	0	0	0	0	0	0	0	0	0	0	0	0	0	0	0
06:45 AM	0	0	0	0	0	0	0	0	0	0	0	0	0	0	0	0	0	0	0	0	0
Total	0	0	0	0	0	0	0	0	0	0	0	0	0	0	0	0	0	0	0	0	0
07:00 AM	0	0	0	0	0	0	0	0	0	0	0	0	0	0	0	0	0	0	0	0	0
07:15 AM	0	0	0	0	0	0	0	0	0	0	0	0	0	0	0	0	0	0	0	0	0
07:30 AM	0	0	0	0	0	0	0	0	0	0	0	0	0	0	0	0	0	0	0	0	0
07:45 AM	0	0	0	0	0	0	0	0	0	0	0	0	0	0	0	0	0	0	0	0	0
Total	0	0	0	0	0	0	0	0	0	0	0	0	0	0	0	0	0	0	0	0	0
08:00 AM	0	0	0	0	0	0	0	0	0	0	0	0	0	0	0	0	0	0	0	0	0
08:15 AM	0	0	0	0	0	0	0	0	0	0	0	0	0	0	0	0	0	0	0	0	0
08:30 AM	0	0	0	0	0	0	0	0	0	0	0	0	0	0	0	0	0	0	0	0	0
08:45 AM	0	0	0	0	0	0	0	0	0	0	0	0	0	0	0	0	0	0	0	0	0
Total	0	0	0	0	0	0	0	0	0	0	0	0	0	0	0	0	0	0	0	0	0
09:00 AM	0	0	0	0	0	0	0	0	0	0	0	0	0	0	0	0	0	0	0	0	0
09:15 AM	0	0	0	0	0	0	0	0	0	0	0	0	0	0	0	0	0	0	0	0	0
09:30 AM	0	0	0	0	0	0	0	0	0	0	0	0	0	0	0	0	0	0	0	0	0
09:45 AM	0	1	0	0	1	0	0	0	0	0	0	0	0	0	0	0	0	0	0	0	1
Total	0	1	0	0	1	0	0	0	0	0	0	0	0	0	0	0	0	0	0	0	1
10:00 AM	0	0	0	0	0	0	0	0	0	0	0	0	0	0	0	0	0	0	0	0	0
10:15 AM	0	1	0	0	1	0	0	0	0	0	0	0	0	0	0	0	0	0	0	0	1
10:30 AM	0	0	0	0	0	0	0	0	0	0	0	0	0	0	0	0	0	0	0	0	0
10:45 AM	0	0	0	0	0	0	0	0	0	0	0	0	0	0	0	0	0	0	0	0	0
Total	0	1	0	0	1	0	0	0	0	0	0	0	0	0	0	0	0	0	0	0	1
11:00 AM	0	0	0	0	0	0	0	0	0	0	0	0	0	0	0	0	0	0	0	0	0
11:15 AM	0	0	0	0	0	0	0	0	0	0	0	0	0	0	0	0	0	0	0	0	0
11:30 AM	0	0	0	0	0	0	0	0	0	0	0	0	0	0	0	0	0	0	0	0	0
11:45 AM	0	0	0	0	0	0	0	0	0	0	0	0	0	0	0	0	0	0	0	0	0
Total	0	0	0	0	0	0	0	0	0	0	0	0	0	0	0	0	0	0	0	0	0
12:00 PM	0	0	0	0	0	0	0	0	0	0	0	0	0	0	0	0	0	0	0	0	0
12:15 PM	0	0	0	0	0	0	0	0	0	0	0	0	0	0	0	0	0	0	0	0	0
12:30 PM	0	0	0	0	0	0	0	0	0	0	0	0	0	0	0	0	0	0	0	0	0
12:45 PM	0	0	0	0	0	0	0	0	0	0	0	0	0	0	0	0	0	0	0	0	0
Total	0	0	0	0	0	0	0	0	0	0	0	0	0	0	0	0	0	0	0	0	0
01:00 PM	0	0	0	0	0	0	0	0	0	0	0	0	0	0	0	0	0	0	0	0	0
01:15 PM	0	0	0	0	0	0	0	0	0	0	0	0	0	0	0	0	0	0	0	0	0
01:30 PM	0	0	0	0	0	0	0	0	0	0	0	0	0	0	0	0	0	0	0	0	0
01:45 PM	0	0	0	0	0	0	0	0	0	0	0	0	0	0	0	0	0	0	0	0	0
Total	0	0	0	0	0	0	0	0	0	0	0	0	0	0	0	0	0	0	0	0	0

Traffic Data Service

San Jose, CA
(408) 622-4787
tdsbay@cs.com

File Name : East Bay Tire 3-28-18 FINAL
Site Code : 00000001
Start Date : 3/28/2018
Page No : 2

Groups Printed- Recology

	ROGERS AVE Southbound					DRIVEWAY Westbound					ROGERS AVE Northbound					EAST BAY TIRE DW Eastbound					
Start Time	Right	Thru	Left	Peds	App. Total	Right	Thru	Left	Peds	App. Total	Right	Thru	Left	Peds	App. Total	Right	Thru	Left	Peds	App. Total	Int. Total
02:00 PM	0	0	0	0	0	0	0	0	0	0	0	0	0	0	0	0	0	0	0	0	0
02:15 PM	0	0	0	0	0	0	0	0	0	0	0	0	0	0	0	0	0	0	0	0	0
02:30 PM	0	0	0	0	0	0	0	0	0	0	0	0	0	0	0	0	0	0	0	0	0
02:45 PM	0	0	0	0	0	0	0	0	0	0	0	0	0	0	0	0	0	0	0	0	0
Total	0	0	0	0	0	0	0	0	0	0	0	0	0	0	0	0	0	0	0	0	0
03:00 PM	0	0	0	0	0	0	0	0	0	0	0	0	0	0	0	0	0	0	0	0	0
03:15 PM	0	0	0	0	0	0	0	0	0	0	0	0	0	0	0	0	0	0	0	0	0
03:30 PM	0	0	0	0	0	0	0	0	0	0	0	0	0	0	0	0	0	0	0	0	0
03:45 PM	0	0	0	0	0	0	0	0	0	0	0	0	0	0	0	0	0	0	0	0	0
Total	0	0	0	0	0	0	0	0	0	0	0	0	0	0	0	0	0	0	0	0	0
04:00 PM	0	0	0	0	0	0	0	0	0	0	0	0	0	0	0	0	0	0	0	0	0
04:15 PM	0	0	0	0	0	0	0	0	0	0	0	0	0	0	0	0	0	0	0	0	0
04:30 PM	0	0	0	0	0	0	0	0	0	0	0	0	0	0	0	0	0	0	0	0	0
04:45 PM	0	0	0	0	0	0	0	0	0	0	0	0	0	0	0	0	0	0	0	0	0
Total	0	0	0	0	0	0	0	0	0	0	0	0	0	0	0	0	0	0	0	0	0
05:00 PM	0	0	0	0	0	0	0	0	0	0	0	0	0	0	0	0	0	0	0	0	0
05:15 PM	0	0	0	0	0	0	0	0	0	0	0	0	0	0	0	0	0	0	0	0	0
05:30 PM	0	0	0	0	0	0	0	0	0	0	0	0	0	0	0	0	0	0	0	0	0
05:45 PM	0	0	0	0	0	0	0	0	0	0	0	0	0	0	0	0	0	0	0	0	0
Total	0	0	0	0	0	0	0	0	0	0	0	0	0	0	0	0	0	0	0	0	0
Grand Total	0	4	0	0	4	0	0	0	0	0	0	0	0	0	0	0	0	0	0	0	4
Apprch %	0	100	0	0		0	0	0	0		0	0	0	0		0	0	0	0		
Total %	0	100	0	0	100	0	0	0	0	0	0	0	0	0	0	0	0	0	0	0	

	ROGERS AVE Southbound				DRIVEWAY Westbound				ROGERS AVE Northbound				EAST BAY TIRE DW Eastbound				
Start Time	Right	Thru	Left	App. Total	Right	Thru	Left	App. Total	Right	Thru	Left	App. Total	Right	Thru	Left	App. Total	Int. Total
Peak Hour Analysis From 04:00 AM to 05:45 PM - Peak 1 of 1																	
Peak Hour for Entire Intersection Begins at 04:45 AM																	
04:45 AM	0	0	0	0	0	0	0	0	0	0	0	0	0	0	0	0	0
05:00 AM	0	0	0	0	0	0	0	0	0	0	0	0	0	0	0	0	0
05:15 AM	0	**1**	0	**1**	0	0	0	0	0	0	0	0	0	0	0	0	**1**
05:30 AM	0	1	0	1	0	0	0	0	0	0	0	0	0	0	0	0	1
Total Volume	0	2	0	2	0	0	0	0	0	0	0	0	0	0	0	0	2
% App. Total	0	100	0		0	0	0		0	0	0		0	0	0		
PHF	.000	.500	.000	.500	.000	.000	.000	.000	.000	.000	.000	.000	.000	.000	.000	.000	.500

Traffic Data Service

San Jose, CA
(408) 622-4787
tdsbay@cs.com

File Name : East Bay Tire 3-28-18 FINAL
Site Code : 00000001
Start Date : 3/28/2018
Page No : 3

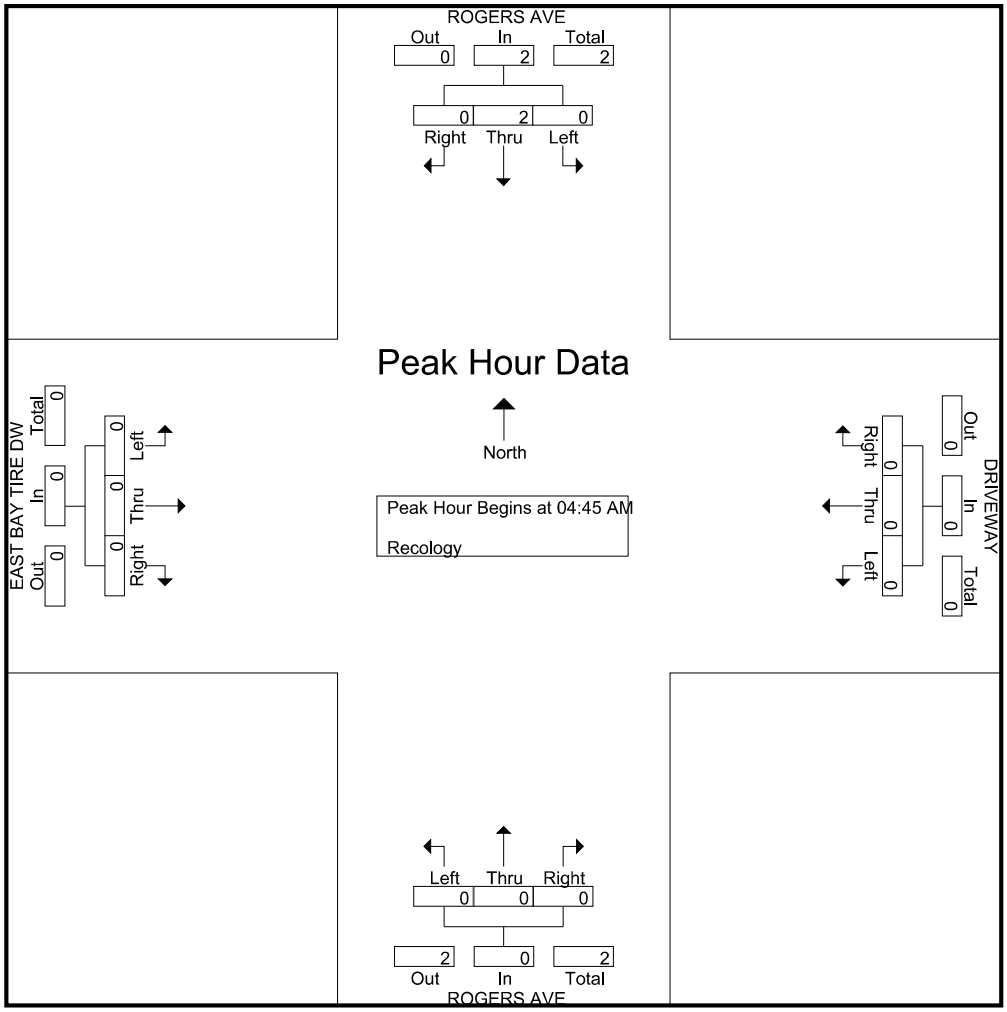

Traffic Data Service

San Jose, CA
(408) 622-4787
tdsbay@cs.com

File Name : Recology 3-27-18 FINAL
Site Code : 00000002
Start Date : 3/27/2018
Page No : 1

Groups Printed- Lights - East Bay Tire - Recology - Heavy

	ROGERS AVE Southbound					Westbound					ROGERS AVE Northbound					RECOLOGY DW Eastbound					
Start Time	Right	Thru	Left	Peds	App. Total	Right	Thru	Left	Peds	App. Total	Right	Thru	Left	Peds	App. Total	Right	Thru	Left	Peds	App. Total	Int. Total
04:00 AM	0	1	0	0	1	0	0	0	0	0	0	4	0	0	4	0	0	0	0	0	5
04:15 AM	0	7	0	0	7	0	0	0	0	0	0	13	1	0	14	0	0	0	0	0	21
04:30 AM	0	7	0	0	7	0	0	0	0	0	0	9	0	0	9	1	0	0	0	1	17
04:45 AM	1	4	0	0	5	0	0	0	0	0	0	19	2	0	21	1	0	0	0	1	27
Total	1	19	0	0	20	0	0	0	0	0	0	45	3	0	48	2	0	0	0	2	70
05:00 AM	5	9	0	0	14	0	0	0	1	1	0	23	0	0	23	2	0	0	2	4	42
05:15 AM	0	8	0	0	8	0	0	0	2	2	0	30	1	0	31	3	0	1	1	5	46
05:30 AM	0	13	0	0	13	0	0	0	0	0	0	40	1	0	41	0	0	0	0	0	54
05:45 AM	0	17	0	0	17	0	0	0	0	0	0	57	1	0	58	0	0	0	1	1	76
Total	5	47	0	0	52	0	0	0	3	3	0	150	3	0	153	5	0	1	4	10	218
06:00 AM	0	9	0	0	9	0	0	0	0	0	0	43	0	0	43	1	0	1	0	2	54
06:15 AM	0	18	0	0	18	0	0	0	2	2	0	28	0	0	28	0	0	0	1	1	49
06:30 AM	0	12	0	0	12	0	0	0	1	1	0	30	0	0	30	0	0	0	2	2	45
06:45 AM	0	29	0	0	29	0	0	0	1	1	0	40	0	0	40	0	0	0	0	0	70
Total	0	68	0	0	68	0	0	0	4	4	0	141	0	0	141	1	0	1	3	5	218
07:00 AM	0	28	0	0	28	0	0	0	1	1	0	43	0	0	43	0	0	0	0	0	72
07:15 AM	2	22	0	0	24	0	0	0	1	1	0	55	1	0	56	0	0	0	0	0	81
07:30 AM	2	16	0	0	18	0	0	0	0	0	0	43	0	0	43	0	0	0	0	0	61
07:45 AM	0	15	0	0	15	0	0	0	0	0	0	64	2	0	66	0	0	0	0	0	81
Total	4	81	0	0	85	0	0	0	2	2	0	205	3	0	208	0	0	0	0	0	295
08:00 AM	0	24	0	0	24	0	0	0	0	0	0	80	3	0	83	0	0	0	0	0	107
08:15 AM	0	18	0	0	18	0	0	0	0	0	0	70	2	0	72	0	0	0	0	0	90
08:30 AM	0	35	0	0	35	0	0	0	0	0	0	61	0	0	61	1	0	0	0	1	97
08:45 AM	0	23	0	0	23	0	0	0	0	0	0	63	1	0	64	1	0	0	0	1	88
Total	0	100	0	0	100	0	0	0	0	0	0	274	6	0	280	2	0	0	0	2	382
09:00 AM	0	27	0	0	27	0	0	0	0	0	0	68	0	0	68	0	0	0	0	0	95
09:15 AM	0	29	0	0	29	0	0	0	0	0	0	71	0	0	71	2	0	0	0	2	102
09:30 AM	1	34	0	0	35	0	0	0	0	0	0	67	1	0	68	0	0	0	1	1	104
09:45 AM	0	22	0	0	22	0	0	0	0	0	0	56	1	0	57	0	0	0	0	0	79
Total	1	112	0	0	113	0	0	0	0	0	0	262	2	0	264	2	0	0	1	3	380
10:00 AM	0	29	0	0	29	0	0	0	0	0	0	43	1	0	44	0	0	0	0	0	73
10:15 AM	0	23	0	0	23	0	0	0	0	0	0	45	2	0	47	1	0	0	0	1	71
10:30 AM	1	33	0	0	34	0	0	0	0	0	0	45	0	0	45	3	0	0	0	3	82
10:45 AM	0	26	0	0	26	0	0	0	0	0	0	40	1	0	41	0	0	1	0	1	68
Total	1	111	0	0	112	0	0	0	0	0	0	173	4	0	177	4	0	1	0	5	294
11:00 AM	1	40	0	0	41	0	0	0	0	0	0	39	0	0	39	2	0	0	0	2	82
11:15 AM	0	34	0	0	34	0	0	0	0	0	0	34	3	0	37	1	0	0	0	1	72
11:30 AM	0	36	0	0	36	0	0	0	0	0	0	46	1	0	47	1	0	0	1	2	85
11:45 AM	0	34	0	0	34	0	0	0	0	0	0	38	1	0	39	1	0	0	0	1	74
Total	1	144	0	0	145	0	0	0	0	0	0	157	5	0	162	5	0	0	1	6	313
12:00 PM	0	44	0	0	44	0	0	0	0	0	0	48	1	0	49	1	0	0	0	1	94
12:15 PM	0	33	0	0	33	0	0	0	0	0	0	29	1	0	30	1	0	0	0	1	64
12:30 PM	0	41	0	0	41	0	0	0	0	0	0	52	1	0	53	2	0	0	0	2	96
12:45 PM	0	33	0	0	33	0	0	0	3	3	0	36	0	0	36	0	0	0	0	0	72
Total	0	151	0	0	151	0	0	0	3	3	0	165	3	0	168	4	0	0	0	4	326
01:00 PM	0	34	0	0	34	0	0	0	2	2	0	49	0	0	49	0	0	0	1	1	86
01:15 PM	0	41	0	0	41	0	0	0	0	0	0	47	0	0	47	0	0	0	0	0	88
01:30 PM	0	42	0	0	42	0	0	0	3	3	0	40	0	0	40	1	0	0	0	1	86
01:45 PM	0	45	0	0	45	0	0	0	0	0	0	40	0	0	40	0	0	0	2	2	87
Total	0	162	0	0	162	0	0	0	5	5	0	176	0	0	176	1	0	0	3	4	347

Traffic Data Service

San Jose, CA
(408) 622-4787
tdsbay@cs.com

File Name : Recology 3-27-18 FINAL
Site Code : 00000002
Start Date : 3/27/2018
Page No : 2

Groups Printed- Lights - East Bay Tire - Recology - Heavy

	ROGERS AVE Southbound					Westbound					ROGERS AVE Northbound					RECOLOGY DW Eastbound					
Start Time	Right	Thru	Left	Peds	App. Total	Right	Thru	Left	Peds	App. Total	Right	Thru	Left	Peds	App. Total	Right	Thru	Left	Peds	App. Total	Int. Total
02:00 PM	0	80	0	0	80	0	0	0	0	0	0	34	0	0	34	0	0	0	2	2	116
02:15 PM	0	47	0	0	47	0	0	0	0	0	0	32	0	0	32	0	0	0	0	0	79
02:30 PM	0	51	0	0	51	0	0	0	0	0	0	39	0	0	39	0	0	0	0	0	90
02:45 PM	0	46	0	0	46	0	0	0	4	4	0	30	0	0	30	1	0	0	0	1	81
Total	0	224	0	0	224	0	0	0	4	4	0	135	0	0	135	1	0	0	2	3	366
03:00 PM	0	61	0	0	61	0	0	0	2	2	0	32	0	0	32	0	0	0	0	0	95
03:15 PM	0	72	0	0	72	0	0	0	0	0	0	25	0	0	25	1	0	0	0	1	98
03:30 PM	0	88	0	0	88	0	0	0	0	0	0	39	0	0	39	0	0	0	1	1	128
03:45 PM	0	71	0	0	71	0	0	0	0	0	0	30	0	0	30	0	0	0	0	0	101
Total	0	292	0	0	292	0	0	0	2	2	0	126	0	0	126	1	0	0	1	2	422
04:00 PM	0	45	0	0	45	0	0	0	0	0	0	29	0	0	29	1	0	0	0	1	75
04:15 PM	2	59	0	0	61	0	0	0	0	0	0	23	0	0	23	2	0	2	0	4	88
04:30 PM	0	66	0	0	66	0	0	0	0	0	0	16	0	0	16	0	0	0	0	0	82
04:45 PM	0	58	0	0	58	0	0	0	0	0	0	15	0	0	15	0	0	0	1	1	74
Total	2	228	0	0	230	0	0	0	0	0	0	83	0	0	83	3	0	2	1	6	319
05:00 PM	0	71	0	0	71	0	0	0	0	0	0	28	0	0	28	0	0	0	0	0	99
05:15 PM	0	71	0	0	71	0	0	0	0	0	0	14	0	0	14	0	0	0	0	0	85
05:30 PM	0	95	0	0	95	0	0	0	0	0	0	14	0	0	14	0	0	0	0	0	109
05:45 PM	0	65	0	0	65	0	0	0	0	0	0	16	0	0	16	0	0	0	0	0	81
Total	0	302	0	0	302	0	0	0	0	0	0	72	0	0	72	0	0	0	0	0	374
Grand Total	15	2041	0	0	2056	0	0	0	23	23	0	2164	29	0	2193	31	0	5	16	52	4324
Apprch %	0.7	99.3	0	0		0	0	0	100		0	98.7	1.3	0		59.6	0	9.6	30.8		
Total %	0.3	47.2	0	0	47.5	0	0	0	0.5	0.5	0	50	0.7	0	50.7	0.7	0	0.1	0.4	1.2	
Lights	11	1874	0	0	1885	0	0	0	23	23	0	1972	5	0	1977	7	0	3	16	26	3911
% Lights	73.3	91.8	0	0	91.7	0	0	0	100	100	0	91.1	17.2	0	90.2	22.6	0	60	100	50	90.4
East Bay Tire	0	10	0	0	10	0	0	0	0	0	0	4	0	0	4	0	0	0	0	0	14
% East Bay Tire	0	0.5	0	0	0.5	0	0	0	0	0	0	0.2	0	0	0.2	0	0	0	0	0	0.3
Recology	4	2	0	0	6	0	0	0	0	0	0	3	12	0	15	17	0	0	0	17	38
% Recology	26.7	0.1	0	0	0.3	0	0	0	0	0	0	0.1	41.4	0	0.7	54.8	0	0	0	32.7	0.9
Heavy	0	155	0	0	155	0	0	0	0	0	0	185	12	0	197	7	0	2	0	9	361
% Heavy	0	7.6	0	0	7.5	0	0	0	0	0	0	8.5	41.4	0	9	22.6	0	40	0	17.3	8.3

	ROGERS AVE Southbound				Westbound				ROGERS AVE Northbound				RECOLOGY DW Eastbound				
Start Time	Right	Thru	Left	App. Total	Right	Thru	Left	App. Total	Right	Thru	Left	App. Total	Right	Thru	Left	App. Total	Int. Total
Peak Hour Analysis From 04:00 AM to 05:45 PM - Peak 1 of 1																	
Peak Hour for Entire Intersection Begins at 03:00 PM																	
03:00 PM	0	61	0	61	0	0	0	0	0	32	0	32	0	0	0	0	93
03:15 PM	0	72	0	72	0	0	0	0	0	25	0	25	**1**	0	0	**1**	98
03:30 PM	0	**88**	0	**88**	0	0	0	0	0	**39**	0	**39**	0	0	0	0	**127**
03:45 PM	0	71	0	71	0	0	0	0	0	30	0	30	0	0	0	0	101
Total Volume	0	292	0	292	0	0	0	0	0	126	0	126	1	0	0	1	419
% App. Total	0	100	0		0	0	0		0	100	0		100	0	0		
PHF	.000	.830	.000	.830	.000	.000	.000	.000	.000	.808	.000	.808	.250	.000	.000	.250	.825

Traffic Data Service

San Jose, CA
(408) 622-4787
tdsbay@cs.com

File Name : Recology 3-27-18 FINAL
Site Code : 00000002
Start Date : 3/27/2018
Page No : 3

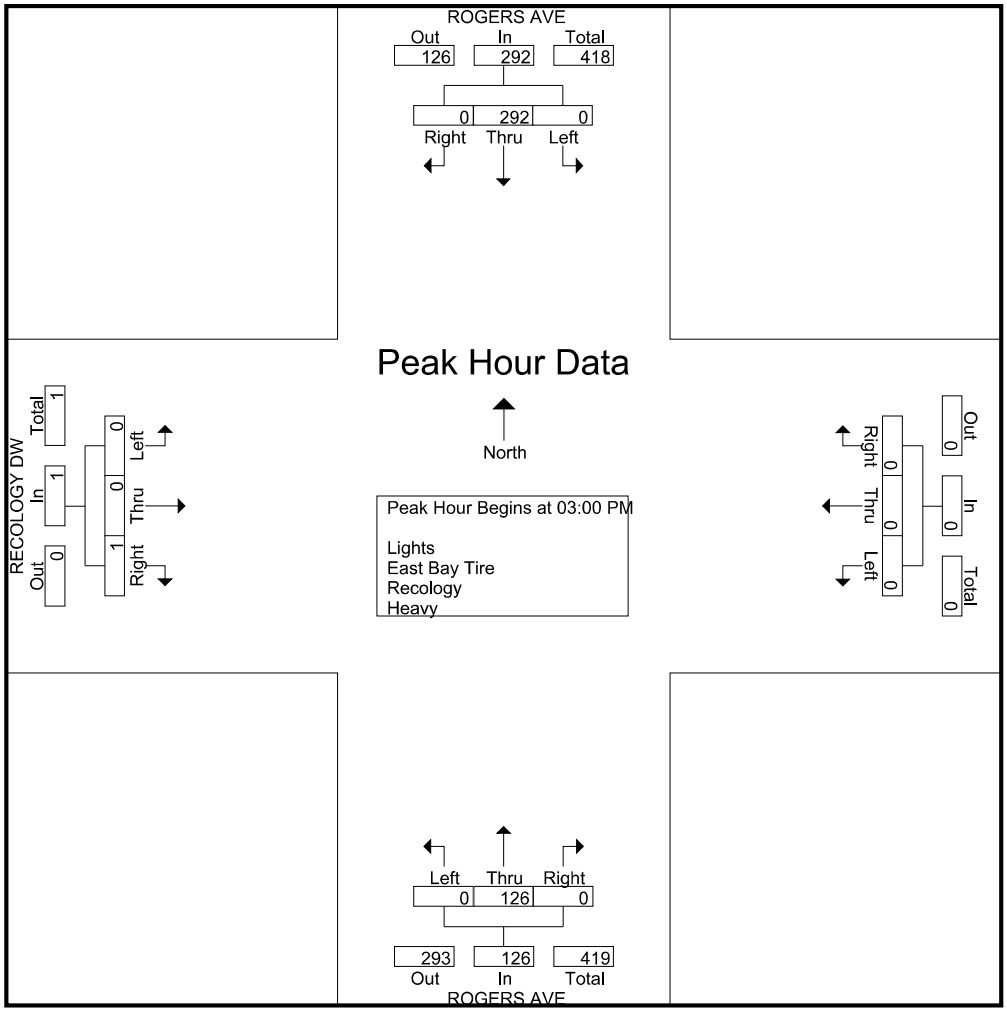

Traffic Data Service

San Jose, CA
(408) 622-4787
tdsbay@cs.com

File Name : Recology 3-27-18 FINAL
Site Code : 00000002
Start Date : 3/27/2018
Page No : 1

Groups Printed- East Bay Tire

	ROGERS AVE Southbound					Westbound					ROGERS AVE Northbound					RECOLOGY DW Eastbound					
Start Time	Right	Thru	Left	Peds	App. Total	Right	Thru	Left	Peds	App. Total	Right	Thru	Left	Peds	App. Total	Right	Thru	Left	Peds	App. Total	Int. Total
04:00 AM	0	0	0	0	0	0	0	0	0	0	0	0	0	0	0	0	0	0	0	0	0
04:15 AM	0	0	0	0	0	0	0	0	0	0	0	0	0	0	0	0	0	0	0	0	0
04:30 AM	0	0	0	0	0	0	0	0	0	0	0	0	0	0	0	0	0	0	0	0	0
04:45 AM	0	0	0	0	0	0	0	0	0	0	0	0	0	0	0	0	0	0	0	0	0
Total	0	0	0	0	0	0	0	0	0	0	0	0	0	0	0	0	0	0	0	0	0
05:00 AM	0	0	0	0	0	0	0	0	0	0	0	0	0	0	0	0	0	0	0	0	0
05:15 AM	0	0	0	0	0	0	0	0	0	0	0	0	0	0	0	0	0	0	0	0	0
05:30 AM	0	0	0	0	0	0	0	0	0	0	0	0	0	0	0	0	0	0	0	0	0
05:45 AM	0	0	0	0	0	0	0	0	0	0	0	0	0	0	0	0	0	0	0	0	0
Total	0	0	0	0	0	0	0	0	0	0	0	0	0	0	0	0	0	0	0	0	0
06:00 AM	0	0	0	0	0	0	0	0	0	0	0	0	0	0	0	0	0	0	0	0	0
06:15 AM	0	0	0	0	0	0	0	0	0	0	0	0	0	0	0	0	0	0	0	0	0
06:30 AM	0	0	0	0	0	0	0	0	0	0	0	0	0	0	0	0	0	0	0	0	0
06:45 AM	0	0	0	0	0	0	0	0	0	0	0	0	0	0	0	0	0	0	0	0	0
Total	0	0	0	0	0	0	0	0	0	0	0	0	0	0	0	0	0	0	0	0	0
07:00 AM	0	0	0	0	0	0	0	0	0	0	0	0	0	0	0	0	0	0	0	0	0
07:15 AM	0	0	0	0	0	0	0	0	0	0	0	0	0	0	0	0	0	0	0	0	0
07:30 AM	0	0	0	0	0	0	0	0	0	0	0	0	0	0	0	0	0	0	0	0	0
07:45 AM	0	0	0	0	0	0	0	0	0	0	0	0	0	0	0	0	0	0	0	0	0
Total	0	0	0	0	0	0	0	0	0	0	0	0	0	0	0	0	0	0	0	0	0
08:00 AM	0	0	0	0	0	0	0	0	0	0	0	0	0	0	0	0	0	0	0	0	0
08:15 AM	0	0	0	0	0	0	0	0	0	0	0	0	0	0	0	0	0	0	0	0	0
08:30 AM	0	1	0	0	1	0	0	0	0	0	0	0	0	0	0	0	0	0	0	0	1
08:45 AM	0	0	0	0	0	0	0	0	0	0	0	0	0	0	0	0	0	0	0	0	0
Total	0	1	0	0	1	0	0	0	0	0	0	0	0	0	0	0	0	0	0	0	1
09:00 AM	0	0	0	0	0	0	0	0	0	0	0	0	0	0	0	0	0	0	0	0	0
09:15 AM	0	0	0	0	0	0	0	0	0	0	0	0	0	0	0	0	0	0	0	0	0
09:30 AM	0	1	0	0	1	0	0	0	0	0	0	0	0	0	0	0	0	0	0	0	1
09:45 AM	0	0	0	0	0	0	0	0	0	0	0	0	0	0	0	0	0	0	0	0	0
Total	0	1	0	0	1	0	0	0	0	0	0	0	0	0	0	0	0	0	0	0	1
10:00 AM	0	0	0	0	0	0	0	0	0	0	0	0	0	0	0	0	0	0	0	0	0
10:15 AM	0	0	0	0	0	0	0	0	0	0	0	0	0	0	0	0	0	0	0	0	0
10:30 AM	0	0	0	0	0	0	0	0	0	0	0	0	0	0	0	0	0	0	0	0	0
10:45 AM	0	0	0	0	0	0	0	0	0	0	0	0	0	0	0	0	0	0	0	0	0
Total	0	0	0	0	0	0	0	0	0	0	0	0	0	0	0	0	0	0	0	0	0
11:00 AM	0	0	0	0	0	0	0	0	0	0	0	0	0	0	0	0	0	0	0	0	0
11:15 AM	0	0	0	0	0	0	0	0	0	0	0	0	0	0	0	0	0	0	0	0	0
11:30 AM	0	0	0	0	0	0	0	0	0	0	0	0	0	0	0	0	0	0	0	0	0
11:45 AM	0	1	0	0	1	0	0	0	0	0	0	0	0	0	0	0	0	0	0	0	1
Total	0	1	0	0	1	0	0	0	0	0	0	0	0	0	0	0	0	0	0	0	1
12:00 PM	0	0	0	0	0	0	0	0	0	0	0	1	0	0	1	0	0	0	0	0	1
12:15 PM	0	0	0	0	0	0	0	0	0	0	0	1	0	0	1	0	0	0	0	0	1
12:30 PM	0	0	0	0	0	0	0	0	0	0	0	0	0	0	0	0	0	0	0	0	0
12:45 PM	0	0	0	0	0	0	0	0	0	0	0	0	0	0	0	0	0	0	0	0	0
Total	0	0	0	0	0	0	0	0	0	0	0	2	0	0	2	0	0	0	0	0	2
01:00 PM	0	0	0	0	0	0	0	0	0	0	0	0	0	0	0	0	0	0	0	0	0
01:15 PM	0	0	0	0	0	0	0	0	0	0	0	0	0	0	0	0	0	0	0	0	0
01:30 PM	0	1	0	0	1	0	0	0	0	0	0	0	0	0	0	0	0	0	0	0	1
01:45 PM	0	0	0	0	0	0	0	0	0	0	0	0	0	0	0	0	0	0	0	0	0
Total	0	1	0	0	1	0	0	0	0	0	0	0	0	0	0	0	0	0	0	0	1

Traffic Data Service

San Jose, CA
(408) 622-4787
tdsbay@cs.com

File Name : Recology 3-27-18 FINAL
Site Code : 00000002
Start Date : 3/27/2018
Page No : 2

Groups Printed- East Bay Tire

	ROGERS AVE Southbound					Westbound					ROGERS AVE Northbound					RECOLOGY DW Eastbound					
Start Time	Right	Thru	Left	Peds	App. Total	Right	Thru	Left	Peds	App. Total	Right	Thru	Left	Peds	App. Total	Right	Thru	Left	Peds	App. Total	Int. Total
02:00 PM	0	2	0	0	2	0	0	0	0	0	0	0	0	0	0	0	0	0	0	0	2
02:15 PM	0	0	0	0	0	0	0	0	0	0	0	1	0	0	1	0	0	0	0	0	1
02:30 PM	0	0	0	0	0	0	0	0	0	0	0	1	0	0	1	0	0	0	0	0	1
02:45 PM	0	0	0	0	0	0	0	0	0	0	0	0	0	0	0	0	0	0	0	0	0
Total	0	2	0	0	2	0	0	0	0	0	0	2	0	0	2	0	0	0	0	0	4
03:00 PM	0	0	0	0	0	0	0	0	0	0	0	0	0	0	0	0	0	0	0	0	0
03:15 PM	0	1	0	0	1	0	0	0	0	0	0	0	0	0	0	0	0	0	0	0	1
03:30 PM	0	1	0	0	1	0	0	0	0	0	0	0	0	0	0	0	0	0	0	0	1
03:45 PM	0	1	0	0	1	0	0	0	0	0	0	0	0	0	0	0	0	0	0	0	1
Total	0	3	0	0	3	0	0	0	0	0	0	0	0	0	0	0	0	0	0	0	3
04:00 PM	0	0	0	0	0	0	0	0	0	0	0	0	0	0	0	0	0	0	0	0	0
04:15 PM	0	0	0	0	0	0	0	0	0	0	0	0	0	0	0	0	0	0	0	0	0
04:30 PM	0	0	0	0	0	0	0	0	0	0	0	0	0	0	0	0	0	0	0	0	0
04:45 PM	0	0	0	0	0	0	0	0	0	0	0	0	0	0	0	0	0	0	0	0	0
Total	0	0	0	0	0	0	0	0	0	0	0	0	0	0	0	0	0	0	0	0	0
05:00 PM	0	0	0	0	0	0	0	0	0	0	0	0	0	0	0	0	0	0	0	0	0
05:15 PM	0	1	0	0	1	0	0	0	0	0	0	0	0	0	0	0	0	0	0	0	1
05:30 PM	0	0	0	0	0	0	0	0	0	0	0	0	0	0	0	0	0	0	0	0	0
05:45 PM	0	0	0	0	0	0	0	0	0	0	0	0	0	0	0	0	0	0	0	0	0
Total	0	1	0	0	1	0	0	0	0	0	0	0	0	0	0	0	0	0	0	0	1
Grand Total	0	10	0	0	10	0	0	0	0	0	0	4	0	0	4	0	0	0	0	0	14
Apprch %	0	100	0	0		0	0	0	0		0	100	0	0		0	0	0	0		
Total %	0	71.4	0	0	71.4	0	0	0	0	0	0	28.6	0	0	28.6	0	0	0	0	0	

	ROGERS AVE Southbound				Westbound				ROGERS AVE Northbound				RECOLOGY DW Eastbound				
Start Time	Right	Thru	Left	App. Total	Right	Thru	Left	App. Total	Right	Thru	Left	App. Total	Right	Thru	Left	App. Total	Int. Total
Peak Hour Analysis From 04:00 AM to 05:45 PM - Peak 1 of 1																	
Peak Hour for Entire Intersection Begins at 01:30 PM																	
01:30 PM	0	1	0	1	0	0	0	0	0	0	0	0	0	0	0	0	1
01:45 PM	0	0	0	0	0	0	0	0	0	0	0	0	0	0	0	0	0
02:00 PM	0	**2**	0	**2**	0	0	0	0	0	0	0	0	0	0	0	0	**2**
02:15 PM	0	0	0	0	0	0	0	0	0	**1**	0	**1**	0	0	0	0	1
Total Volume	0	3	0	3	0	0	0	0	0	1	0	1	0	0	0	0	4
% App. Total	0	100	0		0	0	0		0	100	0		0	0	0		
PHF	.000	.375	.000	.375	.000	.000	.000	.000	.000	.250	.000	.250	.000	.000	.000	.000	.500

Traffic Data Service

San Jose, CA
(408) 622-4787
tdsbay@cs.com

File Name : Recology 3-27-18 FINAL
Site Code : 00000002
Start Date : 3/27/2018
Page No : 3

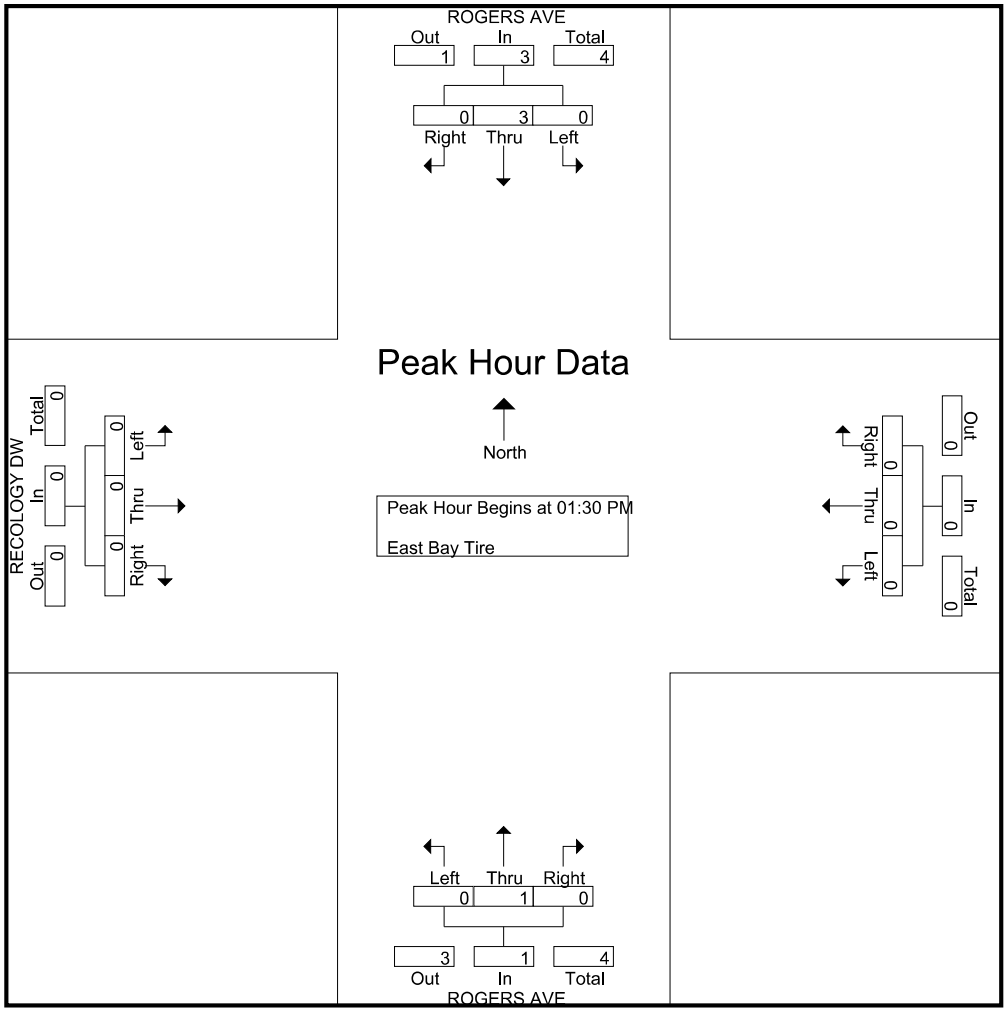

Traffic Data Service

San Jose, CA
(408) 622-4787
tdsbay@cs.com

File Name : Recology 3-27-18 FINAL
Site Code : 00000002
Start Date : 3/27/2018
Page No : 1

Groups Printed- Heavy

	ROGERS AVE Southbound					Westbound					ROGERS AVE Northbound					RECOLOGY DW Eastbound					
Start Time	Right	Thru	Left	Peds	App. Total	Right	Thru	Left	Peds	App. Total	Right	Thru	Left	Peds	App. Total	Right	Thru	Left	Peds	App. Total	Int. Total
04:00 AM	0	0	0	0	0	0	0	0	0	0	0	0	0	0	0	0	0	0	0	0	0
04:15 AM	0	0	0	0	0	0	0	0	0	0	0	0	0	0	0	0	0	0	0	0	0
04:30 AM	0	4	0	0	4	0	0	0	0	0	0	2	0	0	2	0	0	0	0	0	6
04:45 AM	0	0	0	0	0	0	0	0	0	0	0	1	0	0	1	0	0	0	0	0	1
Total	0	4	0	0	4	0	0	0	0	0	0	3	0	0	3	0	0	0	0	0	7
05:00 AM	0	1	0	0	1	0	0	0	0	0	0	1	0	0	1	0	0	0	0	0	2
05:15 AM	0	3	0	0	3	0	0	0	0	0	0	2	1	0	3	1	0	0	0	1	7
05:30 AM	0	1	0	0	1	0	0	0	0	0	0	1	1	0	2	0	0	0	0	0	3
05:45 AM	0	1	0	0	1	0	0	0	0	0	0	1	0	0	1	0	0	0	0	0	2
Total	0	6	0	0	6	0	0	0	0	0	0	5	2	0	7	1	0	0	0	1	14
06:00 AM	0	0	0	0	0	0	0	0	0	0	0	2	0	0	2	0	0	1	0	1	3
06:15 AM	0	1	0	0	1	0	0	0	0	0	0	2	0	0	2	0	0	0	0	0	3
06:30 AM	0	1	0	0	1	0	0	0	0	0	0	1	0	0	1	0	0	0	0	0	2
06:45 AM	0	3	0	0	3	0	0	0	0	0	0	6	0	0	6	0	0	0	0	0	9
Total	0	5	0	0	5	0	0	0	0	0	0	11	0	0	11	0	0	1	0	1	17
07:00 AM	0	1	0	0	1	0	0	0	0	0	0	2	0	0	2	0	0	0	0	0	3
07:15 AM	0	0	0	0	0	0	0	0	0	0	0	3	0	0	3	0	0	0	0	0	3
07:30 AM	0	0	0	0	0	0	0	0	0	0	0	2	0	0	2	0	0	0	0	0	2
07:45 AM	0	3	0	0	3	0	0	0	0	0	0	3	1	0	4	0	0	0	0	0	7
Total	0	4	0	0	4	0	0	0	0	0	0	10	1	0	11	0	0	0	0	0	15
08:00 AM	0	3	0	0	3	0	0	0	0	0	0	7	2	0	9	0	0	0	0	0	12
08:15 AM	0	4	0	0	4	0	0	0	0	0	0	5	1	0	6	0	0	0	0	0	10
08:30 AM	0	0	0	0	0	0	0	0	0	0	0	0	0	0	0	1	0	0	0	1	1
08:45 AM	0	3	0	0	3	0	0	0	0	0	0	5	1	0	6	1	0	0	0	1	10
Total	0	10	0	0	10	0	0	0	0	0	0	17	4	0	21	2	0	0	0	2	33
09:00 AM	0	5	0	0	5	0	0	0	0	0	0	6	0	0	6	0	0	0	0	0	11
09:15 AM	0	0	0	0	0	0	0	0	0	0	0	7	0	0	7	1	0	0	0	1	8
09:30 AM	0	3	0	0	3	0	0	0	0	0	0	4	1	0	5	0	0	0	0	0	8
09:45 AM	0	1	0	0	1	0	0	0	0	0	0	5	0	0	5	0	0	0	0	0	6
Total	0	9	0	0	9	0	0	0	0	0	0	22	1	0	23	1	0	0	0	1	33
10:00 AM	0	4	0	0	4	0	0	0	0	0	0	4	0	0	4	0	0	0	0	0	8
10:15 AM	0	5	0	0	5	0	0	0	0	0	0	8	2	0	10	0	0	0	0	0	15
10:30 AM	0	6	0	0	6	0	0	0	0	0	0	5	0	0	5	2	0	0	0	2	13
10:45 AM	0	1	0	0	1	0	0	0	0	0	0	7	0	0	7	0	0	1	0	1	9
Total	0	16	0	0	16	0	0	0	0	0	0	24	2	0	26	2	0	1	0	3	45
11:00 AM	0	7	0	0	7	0	0	0	0	0	0	4	0	0	4	1	0	0	0	1	12
11:15 AM	0	5	0	0	5	0	0	0	0	0	0	4	1	0	5	0	0	0	0	0	10
11:30 AM	0	10	0	0	10	0	0	0	0	0	0	8	0	0	8	0	0	0	0	0	18
11:45 AM	0	3	0	0	3	0	0	0	0	0	0	4	0	0	4	0	0	0	0	0	7
Total	0	25	0	0	25	0	0	0	0	0	0	20	1	0	21	1	0	0	0	1	47
12:00 PM	0	4	0	0	4	0	0	0	0	0	0	7	0	0	7	0	0	0	0	0	11
12:15 PM	0	5	0	0	5	0	0	0	0	0	0	4	0	0	4	0	0	0	0	0	9
12:30 PM	0	4	0	0	4	0	0	0	0	0	0	10	1	0	11	0	0	0	0	0	15
12:45 PM	0	3	0	0	3	0	0	0	0	0	0	0	0	0	0	0	0	0	0	0	3
Total	0	16	0	0	16	0	0	0	0	0	0	21	1	0	22	0	0	0	0	0	38
01:00 PM	0	1	0	0	1	0	0	0	0	0	0	3	0	0	3	0	0	0	0	0	4
01:15 PM	0	3	0	0	3	0	0	0	0	0	0	3	0	0	3	0	0	0	0	0	6
01:30 PM	0	3	0	0	3	0	0	0	0	0	0	5	0	0	5	0	0	0	0	0	8
01:45 PM	0	1	0	0	1	0	0	0	0	0	0	6	0	0	6	0	0	0	0	0	7
Total	0	8	0	0	8	0	0	0	0	0	0	17	0	0	17	0	0	0	0	0	25

Traffic Data Service

San Jose, CA
(408) 622-4787
tdsbay@cs.com

File Name : Recology 3-27-18 FINAL
Site Code : 00000002
Start Date : 3/27/2018
Page No : 2

Groups Printed- Heavy

	ROGERS AVE Southbound					Westbound					ROGERS AVE Northbound					RECOLOGY DW Eastbound					
Start Time	Right	Thru	Left	Peds	App. Total	Right	Thru	Left	Peds	App. Total	Right	Thru	Left	Peds	App. Total	Right	Thru	Left	Peds	App. Total	Int. Total
02:00 PM	0	10	0	0	10	0	0	0	0	0	0	7	0	0	7	0	0	0	0	0	17
02:15 PM	0	1	0	0	1	0	0	0	0	0	0	5	0	0	5	0	0	0	0	0	6
02:30 PM	0	4	0	0	4	0	0	0	0	0	0	2	0	0	2	0	0	0	0	0	6
02:45 PM	0	6	0	0	6	0	0	0	0	0	0	3	0	0	3	0	0	0	0	0	9
Total	0	21	0	0	21	0	0	0	0	0	0	17	0	0	17	0	0	0	0	0	38
03:00 PM	0	1	0	0	1	0	0	0	0	0	0	2	0	0	2	0	0	0	0	0	3
03:15 PM	0	5	0	0	5	0	0	0	0	0	0	1	0	0	1	0	0	0	0	0	6
03:30 PM	0	2	0	0	2	0	0	0	0	0	0	4	0	0	4	0	0	0	0	0	6
03:45 PM	0	3	0	0	3	0	0	0	0	0	0	1	0	0	1	0	0	0	0	0	4
Total	0	11	0	0	11	0	0	0	0	0	0	8	0	0	8	0	0	0	0	0	19
04:00 PM	0	2	0	0	2	0	0	0	0	0	0	1	0	0	1	0	0	0	0	0	3
04:15 PM	0	8	0	0	8	0	0	0	0	0	0	4	0	0	4	0	0	0	0	0	12
04:30 PM	0	3	0	0	3	0	0	0	0	0	0	0	0	0	0	0	0	0	0	0	3
04:45 PM	0	2	0	0	2	0	0	0	0	0	0	1	0	0	1	0	0	0	0	0	3
Total	0	15	0	0	15	0	0	0	0	0	0	6	0	0	6	0	0	0	0	0	21
05:00 PM	0	0	0	0	0	0	0	0	0	0	0	1	0	0	1	0	0	0	0	0	1
05:15 PM	0	3	0	0	3	0	0	0	0	0	0	1	0	0	1	0	0	0	0	0	4
05:30 PM	0	1	0	0	1	0	0	0	0	0	0	1	0	0	1	0	0	0	0	0	2
05:45 PM	0	1	0	0	1	0	0	0	0	0	0	1	0	0	1	0	0	0	0	0	2
Total	0	5	0	0	5	0	0	0	0	0	0	4	0	0	4	0	0	0	0	0	9
Grand Total	0	155	0	0	155	0	0	0	0	0	0	185	12	0	197	7	0	2	0	9	361
Apprch %	0	100	0	0		0	0	0	0		0	93.9	6.1	0		77.8	0	22.2	0		
Total %	0	42.9	0	0	42.9	0	0	0	0	0	0	51.2	3.3	0	54.6	1.9	0	0.6	0	2.5	

	ROGERS AVE Southbound				Westbound				ROGERS AVE Northbound				RECOLOGY DW Eastbound				
Start Time	Right	Thru	Left	App. Total	Right	Thru	Left	App. Total	Right	Thru	Left	App. Total	Right	Thru	Left	App. Total	Int. Total
Peak Hour Analysis From 04:00 AM to 05:45 PM - Peak 1 of 1																	
Peak Hour for Entire Intersection Begins at 10:15 AM																	
10:15 AM	0	5	0	5	0	0	0	0	0	**8**	**2**	**10**	0	0	0	0	**15**
10:30 AM	0	6	0	6	0	0	0	0	0	5	0	5	**2**	0	0	**2**	13
10:45 AM	0	1	0	1	0	0	0	0	0	7	0	7	0	0	**1**	1	9
11:00 AM	0	**7**	0	**7**	0	0	0	0	0	4	0	4	1	0	0	1	12
Total Volume	0	19	0	19	0	0	0	0	0	24	2	26	3	0	1	4	49
% App. Total	0	100	0		0	0	0		0	92.3	7.7		75	0	25		
PHF	.000	.679	.000	.679	.000	.000	.000	.000	.000	.750	.250	.650	.375	.000	.250	.500	.817

Traffic Data Service

San Jose, CA
(408) 622-4787
tdsbay@cs.com

File Name : Recology 3-27-18 FINAL
Site Code : 00000002
Start Date : 3/27/2018
Page No : 3

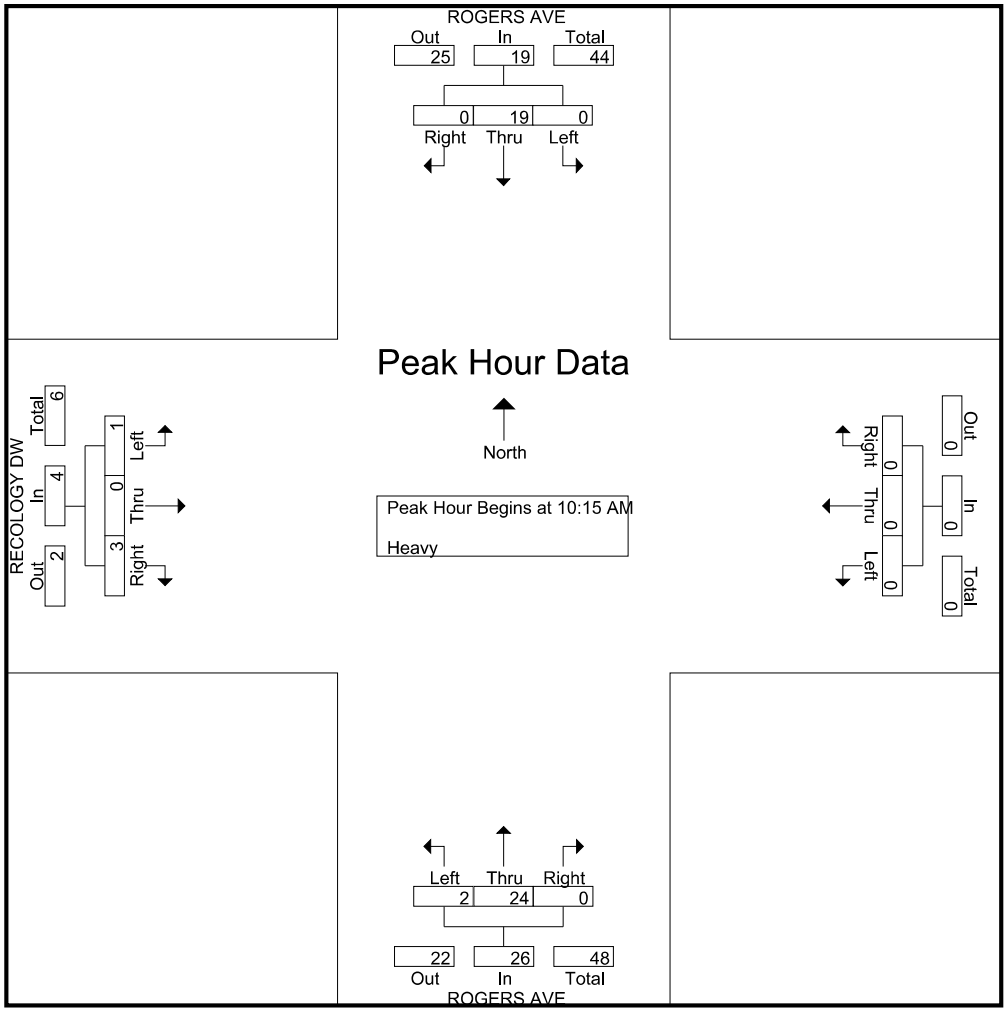

Traffic Data Service

San Jose, CA
(408) 622-4787
tdsbay@cs.com

File Name : Recology 3-27-18 FINAL
Site Code : 00000002
Start Date : 3/27/2018
Page No : 1

Groups Printed- Lights

	ROGERS AVE Southbound					Westbound					ROGERS AVE Northbound					RECOLOGY DW Eastbound					
Start Time	Right	Thru	Left	Peds	App. Total	Right	Thru	Left	Peds	App. Total	Right	Thru	Left	Peds	App. Total	Right	Thru	Left	Peds	App. Total	Int. Total
04:00 AM	0	1	0	0	1	0	0	0	0	0	0	4	0	0	4	0	0	0	0	0	5
04:15 AM	0	7	0	0	7	0	0	0	0	0	0	13	0	0	13	0	0	0	0	0	20
04:30 AM	0	3	0	0	3	0	0	0	0	0	0	7	0	0	7	0	0	0	0	0	10
04:45 AM	0	4	0	0	4	0	0	0	0	0	0	18	0	0	18	0	0	0	0	0	22
Total	0	15	0	0	15	0	0	0	0	0	0	42	0	0	42	0	0	0	0	0	57
05:00 AM	3	8	0	0	11	0	0	0	1	1	0	22	0	0	22	0	0	0	2	2	36
05:15 AM	0	5	0	0	5	0	0	0	2	2	0	28	0	0	28	0	0	1	1	2	37
05:30 AM	0	12	0	0	12	0	0	0	0	0	0	39	0	0	39	0	0	0	0	0	51
05:45 AM	0	16	0	0	16	0	0	0	0	0	0	56	0	0	56	0	0	0	1	1	73
Total	3	41	0	0	44	0	0	0	3	3	0	145	0	0	145	0	0	1	4	5	197
06:00 AM	0	9	0	0	9	0	0	0	0	0	0	41	0	0	41	0	0	0	0	0	50
06:15 AM	0	17	0	0	17	0	0	0	2	2	0	26	0	0	26	0	0	0	1	1	46
06:30 AM	0	11	0	0	11	0	0	0	1	1	0	29	0	0	29	0	0	0	2	2	43
06:45 AM	0	26	0	0	26	0	0	0	1	1	0	34	0	0	34	0	0	0	0	0	61
Total	0	63	0	0	63	0	0	0	4	4	0	130	0	0	130	0	0	0	3	3	200
07:00 AM	0	27	0	0	27	0	0	0	1	1	0	41	0	0	41	0	0	0	0	0	69
07:15 AM	2	22	0	0	24	0	0	0	1	1	0	52	1	0	53	0	0	0	0	0	78
07:30 AM	2	16	0	0	18	0	0	0	0	0	0	41	0	0	41	0	0	0	0	0	59
07:45 AM	0	12	0	0	12	0	0	0	0	0	0	61	1	0	62	0	0	0	0	0	74
Total	4	77	0	0	81	0	0	0	2	2	0	195	2	0	197	0	0	0	0	0	280
08:00 AM	0	21	0	0	21	0	0	0	0	0	0	73	0	0	73	0	0	0	0	0	94
08:15 AM	0	14	0	0	14	0	0	0	0	0	0	65	1	0	66	0	0	0	0	0	80
08:30 AM	0	34	0	0	34	0	0	0	0	0	0	61	0	0	61	0	0	0	0	0	95
08:45 AM	0	20	0	0	20	0	0	0	0	0	0	58	0	0	58	0	0	0	0	0	78
Total	0	89	0	0	89	0	0	0	0	0	0	257	1	0	258	0	0	0	0	0	347
09:00 AM	0	22	0	0	22	0	0	0	0	0	0	61	0	0	61	0	0	0	0	0	83
09:15 AM	0	29	0	0	29	0	0	0	0	0	0	64	0	0	64	0	0	0	0	0	93
09:30 AM	0	29	0	0	29	0	0	0	0	0	0	63	0	0	63	0	0	0	1	1	93
09:45 AM	0	21	0	0	21	0	0	0	0	0	0	51	1	0	52	0	0	0	0	0	73
Total	0	101	0	0	101	0	0	0	0	0	0	239	1	0	240	0	0	0	1	1	342
10:00 AM	0	25	0	0	25	0	0	0	0	0	0	39	0	0	39	0	0	0	0	0	64
10:15 AM	0	18	0	0	18	0	0	0	0	0	0	37	0	0	37	0	0	0	0	0	55
10:30 AM	1	27	0	0	28	0	0	0	0	0	0	40	0	0	40	0	0	0	0	0	68
10:45 AM	0	25	0	0	25	0	0	0	0	0	0	33	0	0	33	0	0	0	0	0	58
Total	1	95	0	0	96	0	0	0	0	0	0	149	0	0	149	0	0	0	0	0	245
11:00 AM	1	33	0	0	34	0	0	0	0	0	0	35	0	0	35	0	0	0	0	0	69
11:15 AM	0	29	0	0	29	0	0	0	0	0	0	30	1	0	31	0	0	0	0	0	60
11:30 AM	0	26	0	0	26	0	0	0	0	0	0	38	0	0	38	1	0	0	1	2	66
11:45 AM	0	30	0	0	30	0	0	0	0	0	0	34	0	0	34	0	0	0	0	0	64
Total	1	118	0	0	119	0	0	0	0	0	0	137	1	0	138	1	0	0	1	2	259
12:00 PM	0	40	0	0	40	0	0	0	0	0	0	39	0	0	39	0	0	0	0	0	79
12:15 PM	0	28	0	0	28	0	0	0	0	0	0	24	0	0	24	0	0	0	0	0	52
12:30 PM	0	37	0	0	37	0	0	0	0	0	0	42	0	0	42	0	0	0	0	0	79
12:45 PM	0	29	0	0	29	0	0	0	3	3	0	35	0	0	35	0	0	0	0	0	67
Total	0	134	0	0	134	0	0	0	3	3	0	140	0	0	140	0	0	0	0	0	277
01:00 PM	0	33	0	0	33	0	0	0	2	2	0	46	0	0	46	0	0	0	1	1	82
01:15 PM	0	38	0	0	38	0	0	0	0	0	0	44	0	0	44	0	0	0	0	0	82
01:30 PM	0	38	0	0	38	0	0	0	3	3	0	35	0	0	35	1	0	0	0	1	77
01:45 PM	0	44	0	0	44	0	0	0	0	0	0	34	0	0	34	0	0	0	2	2	80
Total	0	153	0	0	153	0	0	0	5	5	0	159	0	0	159	1	0	0	3	4	321

Traffic Data Service

San Jose, CA
(408) 622-4787
tdsbay@cs.com

File Name : Recology 3-27-18 FINAL
Site Code : 00000002
Start Date : 3/27/2018
Page No : 2

Groups Printed- Lights

	ROGERS AVE Southbound					Westbound					ROGERS AVE Northbound					RECOLOGY DW Eastbound					
Start Time	Right	Thru	Left	Peds	App. Total	Right	Thru	Left	Peds	App. Total	Right	Thru	Left	Peds	App. Total	Right	Thru	Left	Peds	App. Total	Int. Total
02:00 PM	0	68	0	0	68	0	0	0	0	0	0	27	0	0	27	0	0	0	2	2	97
02:15 PM	0	46	0	0	46	0	0	0	0	0	0	26	0	0	26	0	0	0	0	0	72
02:30 PM	0	47	0	0	47	0	0	0	0	0	0	36	0	0	36	0	0	0	0	0	83
02:45 PM	0	40	0	0	40	0	0	0	4	4	0	27	0	0	27	1	0	0	0	1	72
Total	0	201	0	0	201	0	0	0	4	4	0	116	0	0	116	1	0	0	2	3	324
03:00 PM	0	60	0	0	60	0	0	0	2	2	0	30	0	0	30	0	0	0	0	0	92
03:15 PM	0	66	0	0	66	0	0	0	0	0	0	24	0	0	24	1	0	0	0	1	91
03:30 PM	0	85	0	0	85	0	0	0	0	0	0	35	0	0	35	0	0	0	1	1	121
03:45 PM	0	67	0	0	67	0	0	0	0	0	0	29	0	0	29	0	0	0	0	0	96
Total	0	278	0	0	278	0	0	0	2	2	0	118	0	0	118	1	0	0	1	2	400
04:00 PM	0	43	0	0	43	0	0	0	0	0	0	28	0	0	28	1	0	0	0	1	72
04:15 PM	2	51	0	0	53	0	0	0	0	0	0	19	0	0	19	2	0	2	0	4	76
04:30 PM	0	63	0	0	63	0	0	0	0	0	0	16	0	0	16	0	0	0	0	0	79
04:45 PM	0	56	0	0	56	0	0	0	0	0	0	14	0	0	14	0	0	0	1	1	71
Total	2	213	0	0	215	0	0	0	0	0	0	77	0	0	77	3	0	2	1	6	298
05:00 PM	0	71	0	0	71	0	0	0	0	0	0	27	0	0	27	0	0	0	0	0	98
05:15 PM	0	67	0	0	67	0	0	0	0	0	0	13	0	0	13	0	0	0	0	0	80
05:30 PM	0	94	0	0	94	0	0	0	0	0	0	13	0	0	13	0	0	0	0	0	107
05:45 PM	0	64	0	0	64	0	0	0	0	0	0	15	0	0	15	0	0	0	0	0	79
Total	0	296	0	0	296	0	0	0	0	0	0	68	0	0	68	0	0	0	0	0	364
Grand Total	11	1874	0	0	1885	0	0	0	23	23	0	1972	5	0	1977	7	0	3	16	26	3911
Apprch %	0.6	99.4	0	0		0	0	0	100		0	99.7	0.3	0		26.9	0	11.5	61.5		
Total %	0.3	47.9	0	0	48.2	0	0	0	0.6	0.6	0	50.4	0.1	0	50.5	0.2	0	0.1	0.4	0.7	

	ROGERS AVE Southbound				Westbound				ROGERS AVE Northbound				RECOLOGY DW Eastbound				
Start Time	Right	Thru	Left	App. Total	Right	Thru	Left	App. Total	Right	Thru	Left	App. Total	Right	Thru	Left	App. Total	Int. Total
Peak Hour Analysis From 04:00 AM to 05:45 PM - Peak 1 of 1																	
Peak Hour for Entire Intersection Begins at 03:00 PM																	
03:00 PM	0	60	0	60	0	0	0	0	0	30	0	30	0	0	0	0	90
03:15 PM	0	66	0	66	0	0	0	0	0	24	0	24	**1**	0	0	**1**	91
03:30 PM	0	**85**	0	**85**	0	0	0	0	0	**35**	0	**35**	0	0	0	0	**120**
03:45 PM	0	67	0	67	0	0	0	0	0	29	0	29	0	0	0	0	96
Total Volume	0	278	0	278	0	0	0	0	0	118	0	118	1	0	0	1	397
% App. Total	0	100	0		0	0	0		0	100	0		100	0	0		
PHF	.000	.818	.000	.818	.000	.000	.000	.000	.000	.843	.000	.843	.250	.000	.000	.250	.827

Traffic Data Service

San Jose, CA
(408) 622-4787
tdsbay@cs.com

File Name : Recology 3-27-18 FINAL
Site Code : 00000002
Start Date : 3/27/2018
Page No : 3

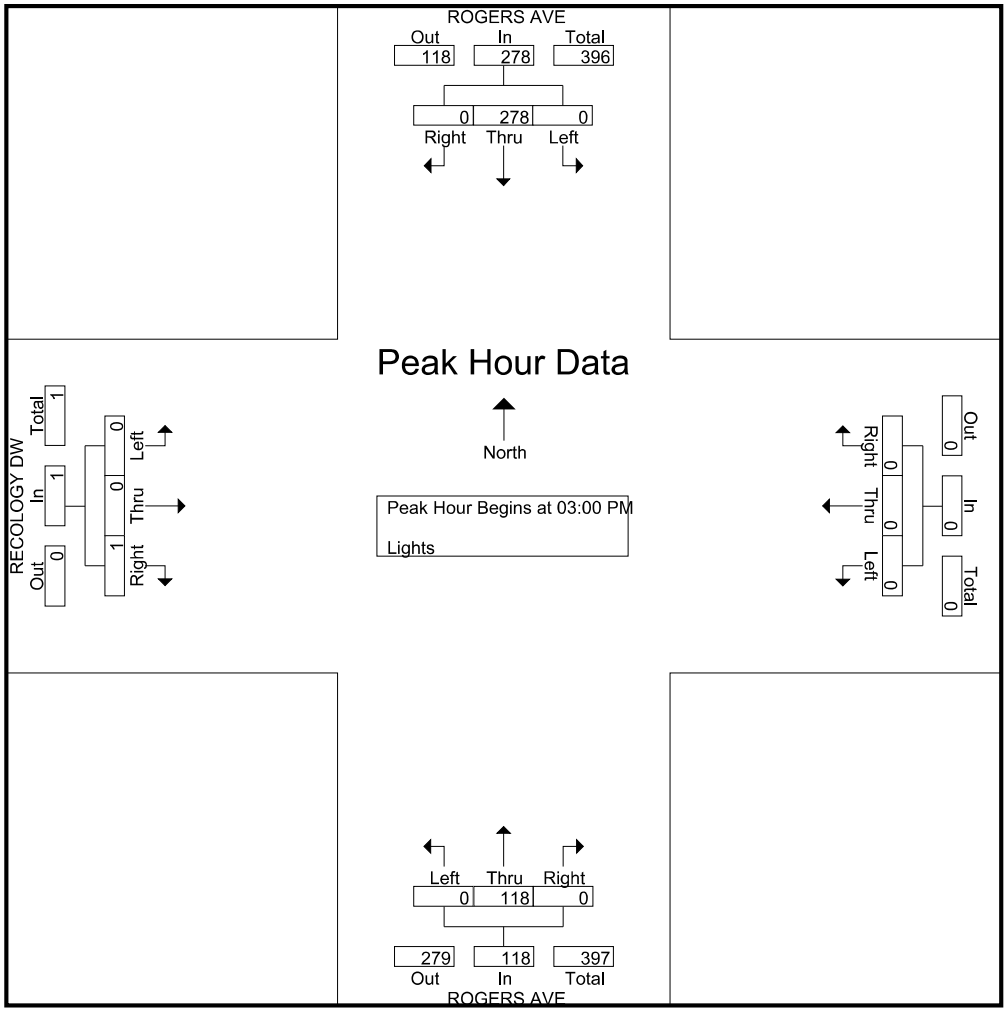

Traffic Data Service

San Jose, CA
(408) 622-4787
tdsbay@cs.com

File Name : Recology 3-27-18 FINAL
Site Code : 00000002
Start Date : 3/27/2018
Page No : 1

Groups Printed- Recology

	ROGERS AVE Southbound					Westbound					ROGERS AVE Northbound					RECOLOGY DW Eastbound					
Start Time	Right	Thru	Left	Peds	App. Total	Right	Thru	Left	Peds	App. Total	Right	Thru	Left	Peds	App. Total	Right	Thru	Left	Peds	App. Total	Int. Total
04:00 AM	0	0	0	0	0	0	0	0	0	0	0	0	0	0	0	0	0	0	0	0	0
04:15 AM	0	0	0	0	0	0	0	0	0	0	0	0	1	0	1	0	0	0	0	0	1
04:30 AM	0	0	0	0	0	0	0	0	0	0	0	0	0	0	0	1	0	0	0	1	1
04:45 AM	1	0	0	0	1	0	0	0	0	0	0	0	2	0	2	1	0	0	0	1	4
Total	1	0	0	0	1	0	0	0	0	0	0	0	3	0	3	2	0	0	0	2	6
05:00 AM	2	0	0	0	2	0	0	0	0	0	0	0	0	0	0	2	0	0	0	2	4
05:15 AM	0	0	0	0	0	0	0	0	0	0	0	0	0	0	0	2	0	0	0	2	2
05:30 AM	0	0	0	0	0	0	0	0	0	0	0	0	0	0	0	0	0	0	0	0	0
05:45 AM	0	0	0	0	0	0	0	0	0	0	0	0	1	0	1	0	0	0	0	0	1
Total	2	0	0	0	2	0	0	0	0	0	0	0	1	0	1	4	0	0	0	4	7
06:00 AM	0	0	0	0	0	0	0	0	0	0	0	0	0	0	0	1	0	0	0	1	1
06:15 AM	0	0	0	0	0	0	0	0	0	0	0	0	0	0	0	0	0	0	0	0	0
06:30 AM	0	0	0	0	0	0	0	0	0	0	0	0	0	0	0	0	0	0	0	0	0
06:45 AM	0	0	0	0	0	0	0	0	0	0	0	0	0	0	0	0	0	0	0	0	0
Total	0	0	0	0	0	0	0	0	0	0	0	0	0	0	0	1	0	0	0	1	1
07:00 AM	0	0	0	0	0	0	0	0	0	0	0	0	0	0	0	0	0	0	0	0	0
07:15 AM	0	0	0	0	0	0	0	0	0	0	0	0	0	0	0	0	0	0	0	0	0
07:30 AM	0	0	0	0	0	0	0	0	0	0	0	0	0	0	0	0	0	0	0	0	0
07:45 AM	0	0	0	0	0	0	0	0	0	0	0	0	0	0	0	0	0	0	0	0	0
Total	0	0	0	0	0	0	0	0	0	0	0	0	0	0	0	0	0	0	0	0	0
08:00 AM	0	0	0	0	0	0	0	0	0	0	0	0	1	0	1	0	0	0	0	0	1
08:15 AM	0	0	0	0	0	0	0	0	0	0	0	0	0	0	0	0	0	0	0	0	0
08:30 AM	0	0	0	0	0	0	0	0	0	0	0	0	0	0	0	0	0	0	0	0	0
08:45 AM	0	0	0	0	0	0	0	0	0	0	0	0	0	0	0	0	0	0	0	0	0
Total	0	0	0	0	0	0	0	0	0	0	0	0	1	0	1	0	0	0	0	0	1
09:00 AM	0	0	0	0	0	0	0	0	0	0	0	1	0	0	1	0	0	0	0	0	1
09:15 AM	0	0	0	0	0	0	0	0	0	0	0	0	0	0	0	1	0	0	0	1	1
09:30 AM	1	1	0	0	2	0	0	0	0	0	0	0	0	0	0	0	0	0	0	0	2
09:45 AM	0	0	0	0	0	0	0	0	0	0	0	0	0	0	0	0	0	0	0	0	0
Total	1	1	0	0	2	0	0	0	0	0	0	1	0	0	1	1	0	0	0	1	4
10:00 AM	0	0	0	0	0	0	0	0	0	0	0	0	1	0	1	0	0	0	0	0	1
10:15 AM	0	0	0	0	0	0	0	0	0	0	0	0	0	0	0	1	0	0	0	1	1
10:30 AM	0	0	0	0	0	0	0	0	0	0	0	0	0	0	0	1	0	0	0	1	1
10:45 AM	0	0	0	0	0	0	0	0	0	0	0	0	1	0	1	0	0	0	0	0	1
Total	0	0	0	0	0	0	0	0	0	0	0	0	2	0	2	2	0	0	0	2	4
11:00 AM	0	0	0	0	0	0	0	0	0	0	0	0	0	0	0	1	0	0	0	1	1
11:15 AM	0	0	0	0	0	0	0	0	0	0	0	0	1	0	1	1	0	0	0	1	2
11:30 AM	0	0	0	0	0	0	0	0	0	0	0	0	1	0	1	0	0	0	0	0	1
11:45 AM	0	0	0	0	0	0	0	0	0	0	0	0	1	0	1	1	0	0	0	1	2
Total	0	0	0	0	0	0	0	0	0	0	0	0	3	0	3	3	0	0	0	3	6
12:00 PM	0	0	0	0	0	0	0	0	0	0	0	1	1	0	2	1	0	0	0	1	3
12:15 PM	0	0	0	0	0	0	0	0	0	0	0	0	1	0	1	1	0	0	0	1	2
12:30 PM	0	0	0	0	0	0	0	0	0	0	0	0	0	0	0	2	0	0	0	2	2
12:45 PM	0	1	0	0	1	0	0	0	0	0	0	1	0	0	1	0	0	0	0	0	2
Total	0	1	0	0	1	0	0	0	0	0	0	2	2	0	4	4	0	0	0	4	9
01:00 PM	0	0	0	0	0	0	0	0	0	0	0	0	0	0	0	0	0	0	0	0	0
01:15 PM	0	0	0	0	0	0	0	0	0	0	0	0	0	0	0	0	0	0	0	0	0
01:30 PM	0	0	0	0	0	0	0	0	0	0	0	0	0	0	0	0	0	0	0	0	0
01:45 PM	0	0	0	0	0	0	0	0	0	0	0	0	0	0	0	0	0	0	0	0	0
Total	0	0	0	0	0	0	0	0	0	0	0	0	0	0	0	0	0	0	0	0	0

Traffic Data Service

San Jose, CA
(408) 622-4787
tdsbay@cs.com

File Name : Recology 3-27-18 FINAL
Site Code : 00000002
Start Date : 3/27/2018
Page No : 2

Groups Printed- Recology

	ROGERS AVE Southbound					Westbound					ROGERS AVE Northbound					RECOLOGY DW Eastbound					
Start Time	Right	Thru	Left	Peds	App. Total	Right	Thru	Left	Peds	App. Total	Right	Thru	Left	Peds	App. Total	Right	Thru	Left	Peds	App. Total	Int. Total
02:00 PM	0	0	0	0	0	0	0	0	0	0	0	0	0	0	0	0	0	0	0	0	0
02:15 PM	0	0	0	0	0	0	0	0	0	0	0	0	0	0	0	0	0	0	0	0	0
02:30 PM	0	0	0	0	0	0	0	0	0	0	0	0	0	0	0	0	0	0	0	0	0
02:45 PM	0	0	0	0	0	0	0	0	0	0	0	0	0	0	0	0	0	0	0	0	0
Total	0	0	0	0	0	0	0	0	0	0	0	0	0	0	0	0	0	0	0	0	0
03:00 PM	0	0	0	0	0	0	0	0	0	0	0	0	0	0	0	0	0	0	0	0	0
03:15 PM	0	0	0	0	0	0	0	0	0	0	0	0	0	0	0	0	0	0	0	0	0
03:30 PM	0	0	0	0	0	0	0	0	0	0	0	0	0	0	0	0	0	0	0	0	0
03:45 PM	0	0	0	0	0	0	0	0	0	0	0	0	0	0	0	0	0	0	0	0	0
Total	0	0	0	0	0	0	0	0	0	0	0	0	0	0	0	0	0	0	0	0	0
04:00 PM	0	0	0	0	0	0	0	0	0	0	0	0	0	0	0	0	0	0	0	0	0
04:15 PM	0	0	0	0	0	0	0	0	0	0	0	0	0	0	0	0	0	0	0	0	0
04:30 PM	0	0	0	0	0	0	0	0	0	0	0	0	0	0	0	0	0	0	0	0	0
04:45 PM	0	0	0	0	0	0	0	0	0	0	0	0	0	0	0	0	0	0	0	0	0
Total	0	0	0	0	0	0	0	0	0	0	0	0	0	0	0	0	0	0	0	0	0
05:00 PM	0	0	0	0	0	0	0	0	0	0	0	0	0	0	0	0	0	0	0	0	0
05:15 PM	0	0	0	0	0	0	0	0	0	0	0	0	0	0	0	0	0	0	0	0	0
05:30 PM	0	0	0	0	0	0	0	0	0	0	0	0	0	0	0	0	0	0	0	0	0
05:45 PM	0	0	0	0	0	0	0	0	0	0	0	0	0	0	0	0	0	0	0	0	0
Total	0	0	0	0	0	0	0	0	0	0	0	0	0	0	0	0	0	0	0	0	0
Grand Total	4	2	0	0	6	0	0	0	0	0	0	3	12	0	15	17	0	0	0	17	38
Apprch %	66.7	33.3	0	0		0	0	0	0		0	20	80	0		100	0	0	0		
Total %	10.5	5.3	0	0	15.8	0	0	0	0	0	0	7.9	31.6	0	39.5	44.7	0	0	0	44.7	

	ROGERS AVE Southbound				Westbound				ROGERS AVE Northbound				RECOLOGY DW Eastbound				
Start Time	Right	Thru	Left	App. Total	Right	Thru	Left	App. Total	Right	Thru	Left	App. Total	Right	Thru	Left	App. Total	Int. Total
Peak Hour Analysis From 04:00 AM to 05:45 PM - Peak 1 of 1																	
Peak Hour for Entire Intersection Begins at 04:30 AM																	
04:30 AM	0	0	0	0	0	0	0	0	0	0	0	0	1	0	0	1	1
04:45 AM	1	0	0	1	0	0	0	0	0	0	**2**	**2**	1	0	0	1	**4**
05:00 AM	**2**	0	0	**2**	0	0	0	0	0	0	0	0	**2**	0	0	**2**	4
05:15 AM	0	0	0	0	0	0	0	0	0	0	0	0	2	0	0	2	2
Total Volume	3	0	0	3	0	0	0	0	0	0	2	2	6	0	0	6	11
% App. Total	100	0	0		0	0	0		0	0	100		100	0	0		
PHF	.375	.000	.000	.375	.000	.000	.000	.000	.000	.000	.250	.250	.750	.000	.000	.750	.688

Traffic Data Service

San Jose, CA
(408) 622-4787
tdsbay@cs.com

File Name : Recology 3-27-18 FINAL
Site Code : 00000002
Start Date : 3/27/2018
Page No : 3

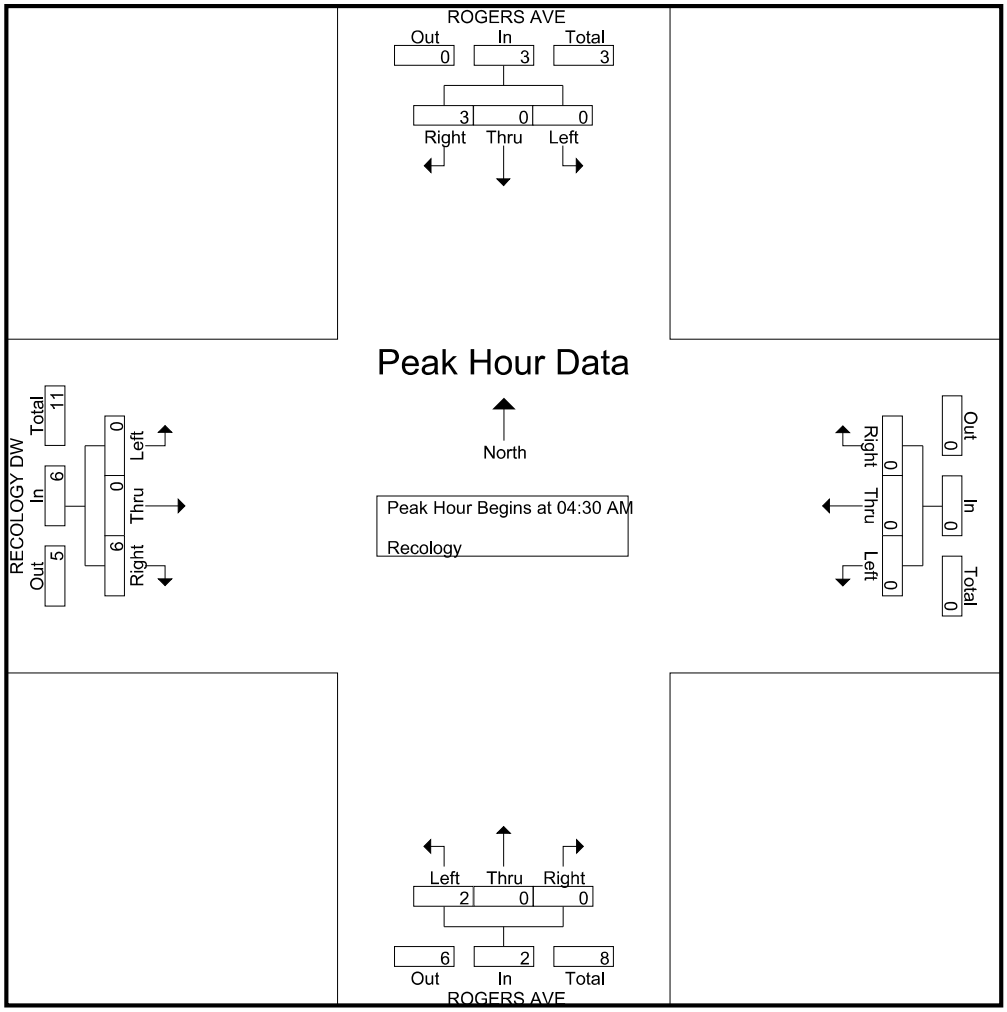

Traffic Data Service

San Jose, CA
(408) 622-4787
tdsbay@cs.com

File Name : Recology 3-28-18 FINAL
Site Code : 00000002
Start Date : 3/28/2018
Page No : 1

Groups Printed- Lights - East Bay Tire - Recology - Heavy

	ROGERS AVE Southbound					Westbound					ROGERS AVE Northbound					RECOLOGY DW Eastbound					
Start Time	Right	Thru	Left	Peds	App. Total	Right	Thru	Left	Peds	App. Total	Right	Thru	Left	Peds	App. Total	Right	Thru	Left	Peds	App. Total	Int. Total
04:00 AM	0	11	0	0	11	0	0	0	0	0	0	4	0	0	4	0	0	0	0	0	15
04:15 AM	0	5	0	0	5	0	0	0	0	0	0	11	2	0	13	0	0	0	0	0	18
04:30 AM	0	3	0	0	3	0	0	0	0	0	0	10	0	0	10	2	0	0	0	2	15
04:45 AM	0	5	0	0	5	0	0	0	0	0	0	22	0	0	22	0	0	0	0	0	27
Total	0	24	0	0	24	0	0	0	0	0	0	47	2	0	49	2	0	0	0	2	75
05:00 AM	0	10	0	0	10	0	0	0	0	0	0	24	1	0	25	0	0	0	0	0	35
05:15 AM	0	10	0	0	10	0	0	0	0	0	0	33	1	0	34	0	0	0	1	1	45
05:30 AM	1	10	0	0	11	0	0	0	0	0	0	32	1	0	33	2	0	0	0	2	46
05:45 AM	0	14	0	0	14	0	0	0	0	0	0	59	0	0	59	0	0	0	0	0	73
Total	1	44	0	0	45	0	0	0	0	0	0	148	3	0	151	2	0	0	1	3	199
06:00 AM	0	20	0	0	20	0	0	0	1	1	0	41	2	0	43	1	0	0	1	2	66
06:15 AM	0	8	0	0	8	0	0	0	0	0	0	28	0	0	28	1	0	0	2	3	39
06:30 AM	0	21	0	0	21	0	0	0	0	0	0	32	0	0	32	0	0	0	0	0	53
06:45 AM	0	30	0	0	30	0	0	0	0	0	0	38	0	0	38	1	0	0	1	2	70
Total	0	79	0	0	79	0	0	0	1	1	0	139	2	0	141	3	0	0	4	7	228
07:00 AM	0	23	0	1	24	0	0	0	0	0	0	54	0	0	54	0	0	0	0	0	78
07:15 AM	2	19	0	0	21	0	0	0	1	1	0	57	1	0	58	0	0	0	0	0	80
07:30 AM	1	17	0	0	18	0	0	0	1	1	0	45	1	0	46	0	0	0	0	0	65
07:45 AM	1	24	0	0	25	0	0	0	0	0	0	72	1	1	74	1	0	0	0	1	100
Total	4	83	0	1	88	0	0	0	2	2	0	228	3	1	232	1	0	0	0	1	323
08:00 AM	0	33	0	0	33	0	0	0	0	0	0	78	2	0	80	0	0	0	0	0	113
08:15 AM	0	20	0	0	20	0	0	0	0	0	0	61	0	0	61	0	0	0	0	0	81
08:30 AM	0	30	0	0	30	0	0	0	1	1	0	44	0	0	44	0	0	0	0	0	75
08:45 AM	0	24	0	0	24	0	0	0	0	0	0	61	1	0	62	2	0	0	0	2	88
Total	0	107	0	0	107	0	0	0	1	1	0	244	3	0	247	2	0	0	0	2	357
09:00 AM	0	36	0	0	36	0	0	0	0	0	0	56	0	0	56	1	0	0	1	2	94
09:15 AM	0	20	0	0	20	0	0	0	0	0	0	68	1	0	69	0	0	0	0	0	89
09:30 AM	0	23	0	0	23	0	0	0	0	0	0	47	1	0	48	0	0	1	0	1	72
09:45 AM	0	20	0	0	20	0	0	0	0	0	0	49	3	0	52	1	0	1	0	2	74
Total	0	99	0	0	99	0	0	0	0	0	0	220	5	0	225	2	0	2	1	5	329
10:00 AM	0	24	0	0	24	0	0	0	0	0	0	40	0	0	40	1	0	0	0	1	65
10:15 AM	1	46	0	0	47	0	0	0	0	0	0	35	1	0	36	0	0	0	0	0	83
10:30 AM	0	33	0	0	33	0	0	0	0	0	0	50	0	0	50	1	0	1	0	2	85
10:45 AM	0	37	0	0	37	0	0	0	0	0	0	51	1	0	52	1	0	0	0	1	90
Total	1	140	0	0	141	0	0	0	0	0	0	176	2	0	178	3	0	1	0	4	323
11:00 AM	0	33	0	0	33	0	0	0	1	1	0	35	1	0	36	1	0	0	0	1	71
11:15 AM	0	41	0	0	41	0	0	0	0	0	0	46	1	0	47	4	0	0	0	4	92
11:30 AM	0	34	0	0	34	0	0	0	0	0	0	38	3	0	41	0	0	0	0	0	75
11:45 AM	0	20	0	0	20	0	0	0	0	0	0	39	0	0	39	3	0	0	0	3	62
Total	0	128	0	0	128	0	0	0	1	1	0	158	5	0	163	8	0	0	0	8	300
12:00 PM	0	39	0	0	39	0	0	0	0	0	0	27	0	0	27	0	0	0	0	0	66
12:15 PM	0	38	0	0	38	0	0	0	0	0	0	41	0	0	41	0	0	0	0	0	79
12:30 PM	0	32	0	0	32	0	0	0	0	0	0	46	0	0	46	0	0	0	1	1	79
12:45 PM	0	41	0	0	41	0	0	0	0	0	0	35	1	0	36	0	0	0	0	0	77
Total	0	150	0	0	150	0	0	0	0	0	0	149	1	0	150	0	0	0	1	1	301
01:00 PM	0	43	0	0	43	0	0	0	2	2	0	45	0	0	45	2	0	0	0	2	92
01:15 PM	0	36	0	0	36	0	0	0	0	0	0	46	0	0	46	0	0	0	1	1	83
01:30 PM	0	46	0	0	46	0	0	0	0	0	0	45	0	0	45	0	0	0	0	0	91
01:45 PM	0	38	0	0	38	0	0	0	1	1	0	41	0	0	41	0	0	0	0	0	80
Total	0	163	0	0	163	0	0	0	3	3	0	177	0	0	177	2	0	0	1	3	346

Traffic Data Service

San Jose, CA
(408) 622-4787
tdsbay@cs.com

File Name : Recology 3-28-18 FINAL
Site Code : 00000002
Start Date : 3/28/2018
Page No : 2

Groups Printed- Lights - East Bay Tire - Recology - Heavy

	ROGERS AVE Southbound					Westbound					ROGERS AVE Northbound					RECOLOGY DW Eastbound					
Start Time	Right	Thru	Left	Peds	App. Total	Right	Thru	Left	Peds	App. Total	Right	Thru	Left	Peds	App. Total	Right	Thru	Left	Peds	App. Total	Int. Total
02:00 PM	0	67	0	0	67	0	0	0	0	0	0	43	0	0	43	2	0	0	1	3	113
02:15 PM	0	51	0	0	51	0	0	0	0	0	0	43	0	1	44	0	0	0	0	0	95
02:30 PM	0	62	0	0	62	0	0	0	0	0	0	44	0	0	44	0	0	0	0	0	106
02:45 PM	0	64	0	0	64	0	0	0	0	0	0	24	0	0	24	0	0	0	0	0	88
Total	0	244	0	0	244	0	0	0	0	0	0	154	0	1	155	2	0	0	1	3	402
03:00 PM	1	74	0	1	76	0	0	0	0	0	0	23	0	0	23	0	0	0	1	1	100
03:15 PM	0	57	0	0	57	0	0	0	0	0	0	20	0	0	20	1	0	0	0	1	78
03:30 PM	0	69	0	0	69	0	0	0	0	0	0	26	0	0	26	0	0	0	0	0	95
03:45 PM	0	54	0	0	54	0	0	0	0	0	0	34	0	0	34	0	0	0	0	0	88
Total	1	254	0	1	256	0	0	0	0	0	0	103	0	0	103	1	0	0	1	2	361
04:00 PM	0	78	0	0	78	0	0	0	0	0	0	38	0	0	38	1	0	0	1	2	118
04:15 PM	0	63	0	0	63	0	0	0	0	0	0	37	0	0	37	3	0	2	0	5	105
04:30 PM	0	84	0	0	84	0	0	0	0	0	0	24	0	1	25	0	0	0	0	0	109
04:45 PM	0	57	0	1	58	0	0	0	0	0	0	27	0	0	27	0	0	0	2	2	87
Total	0	282	0	1	283	0	0	0	0	0	0	126	0	1	127	4	0	2	3	9	419
05:00 PM	0	88	0	0	88	0	0	0	0	0	0	28	0	0	28	0	0	0	0	0	116
05:15 PM	0	83	0	0	83	0	0	0	0	0	0	16	0	0	16	0	0	0	1	1	100
05:30 PM	0	93	0	0	93	0	0	0	0	0	0	16	0	0	16	0	0	0	0	0	109
05:45 PM	0	65	0	0	65	0	0	0	0	0	0	16	0	0	16	0	0	0	0	0	81
Total	0	329	0	0	329	0	0	0	0	0	0	76	0	0	76	0	0	0	1	1	406
Grand Total	7	2126	0	3	2136	0	0	0	8	8	0	2145	26	3	2174	32	0	5	14	51	4369
Apprch %	0.3	99.5	0	0.1		0	0	0	100		0	98.7	1.2	0.1		62.7	0	9.8	27.5		
Total %	0.2	48.7	0	0.1	48.9	0	0	0	0.2	0.2	0	49.1	0.6	0.1	49.8	0.7	0	0.1	0.3	1.2	
Lights	5	1947	0	3	1955	0	0	0	8	8	0	1981	6	3	1990	11	0	4	14	29	3982
% Lights	71.4	91.6	0	100	91.5	0	0	0	100	100	0	92.4	23.1	100	91.5	34.4	0	80	100	56.9	91.1
East Bay Tire	0	8	0	0	8	0	0	0	0	0	0	6	0	0	6	1	0	0	0	1	15
% East Bay Tire	0	0.4	0	0	0.4	0	0	0	0	0	0	0.3	0	0	0.3	3.1	0	0	0	2	0.3
Recology	2	2	0	0	4	0	0	0	0	0	0	0	16	0	16	16	0	0	0	16	36
% Recology	28.6	0.1	0	0	0.2	0	0	0	0	0	0	0	61.5	0	0.7	50	0	0	0	31.4	0.8
Heavy	0	169	0	0	169	0	0	0	0	0	0	158	4	0	162	4	0	1	0	5	336
% Heavy	0	7.9	0	0	7.9	0	0	0	0	0	0	7.4	15.4	0	7.5	12.5	0	20	0	9.8	7.7

	ROGERS AVE Southbound				Westbound				ROGERS AVE Northbound				RECOLOGY DW Eastbound				
Start Time	Right	Thru	Left	App. Total	Right	Thru	Left	App. Total	Right	Thru	Left	App. Total	Right	Thru	Left	App. Total	Int. Total
Peak Hour Analysis From 04:00 AM to 05:45 PM - Peak 1 of 1																	
Peak Hour for Entire Intersection Begins at 03:45 PM																	
03:45 PM	0	54	0	54	0	0	0	0	0	34	0	34	0	0	0	0	88
04:00 PM	0	78	0	78	0	0	0	0	0	**38**	0	**38**	1	0	0	1	**117**
04:15 PM	0	63	0	63	0	0	0	0	0	37	0	37	**3**	0	**2**	**5**	105
04:30 PM	0	**84**	0	**84**	0	0	0	0	0	24	0	24	0	0	0	0	108
Total Volume	0	279	0	279	0	0	0	0	0	133	0	133	4	0	2	6	418
% App. Total	0	100	0		0	0	0		0	100	0		66.7	0	33.3		
PHF	.000	.830	.000	.830	.000	.000	.000	.000	.000	.875	.000	.875	.333	.000	.250	.300	.893

Traffic Data Service

San Jose, CA
(408) 622-4787
tdsbay@cs.com

File Name : Recology 3-28-18 FINAL
Site Code : 00000002
Start Date : 3/28/2018
Page No : 3

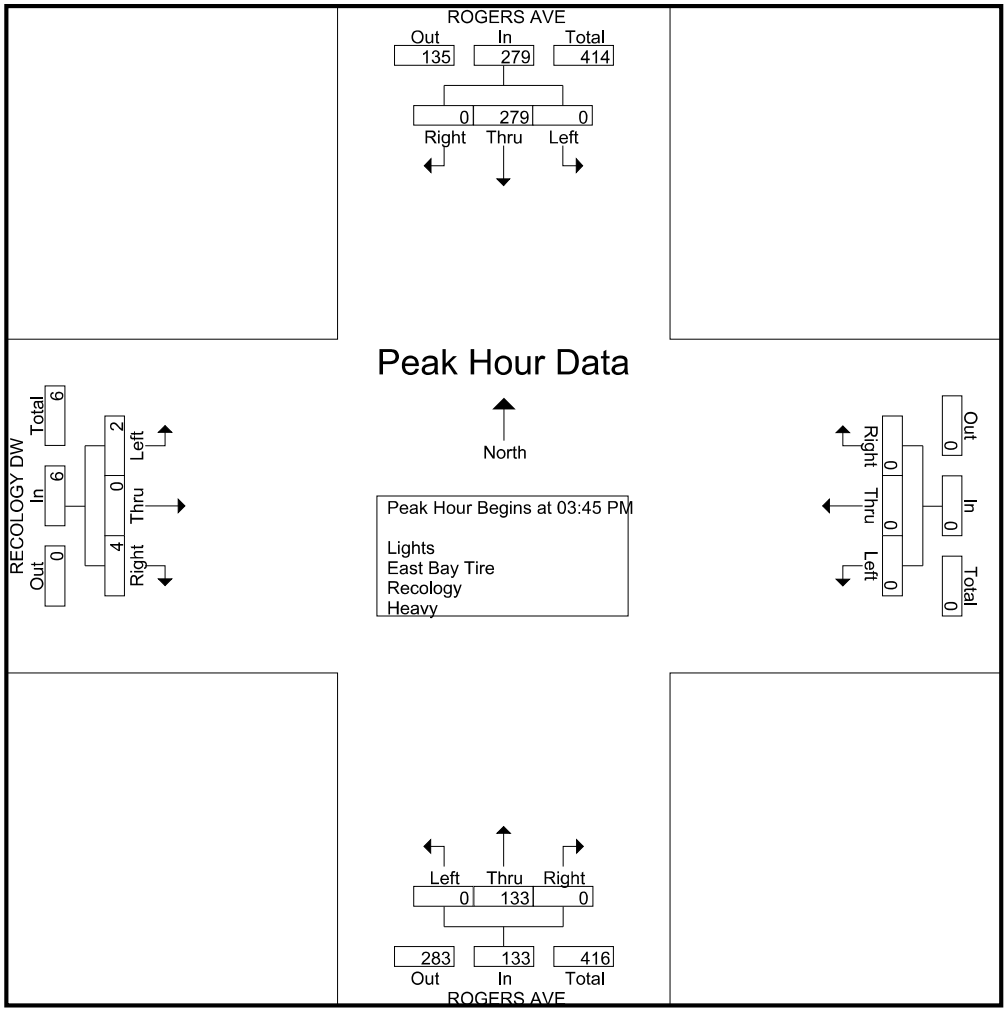

Traffic Data Service

San Jose, CA
(408) 622-4787
tdsbay@cs.com

File Name : Recology 3-28-18 FINAL
Site Code : 00000002
Start Date : 3/28/2018
Page No : 1

Groups Printed- East Bay Tire

	ROGERS AVE Southbound					Westbound					ROGERS AVE Northbound					RECOLOGY DW Eastbound					
Start Time	Right	Thru	Left	Peds	App. Total	Right	Thru	Left	Peds	App. Total	Right	Thru	Left	Peds	App. Total	Right	Thru	Left	Peds	App. Total	Int. Total
04:00 AM	0	0	0	0	0	0	0	0	0	0	0	0	0	0	0	0	0	0	0	0	0
04:15 AM	0	0	0	0	0	0	0	0	0	0	0	0	0	0	0	0	0	0	0	0	0
04:30 AM	0	0	0	0	0	0	0	0	0	0	0	0	0	0	0	0	0	0	0	0	0
04:45 AM	0	0	0	0	0	0	0	0	0	0	0	0	0	0	0	0	0	0	0	0	0
Total	0	0	0	0	0	0	0	0	0	0	0	0	0	0	0	0	0	0	0	0	0
05:00 AM	0	0	0	0	0	0	0	0	0	0	0	0	0	0	0	0	0	0	0	0	0
05:15 AM	0	0	0	0	0	0	0	0	0	0	0	0	0	0	0	0	0	0	0	0	0
05:30 AM	0	0	0	0	0	0	0	0	0	0	0	0	0	0	0	0	0	0	0	0	0
05:45 AM	0	0	0	0	0	0	0	0	0	0	0	0	0	0	0	0	0	0	0	0	0
Total	0	0	0	0	0	0	0	0	0	0	0	0	0	0	0	0	0	0	0	0	0
06:00 AM	0	0	0	0	0	0	0	0	0	0	0	0	0	0	0	0	0	0	0	0	0
06:15 AM	0	0	0	0	0	0	0	0	0	0	0	0	0	0	0	0	0	0	0	0	0
06:30 AM	0	0	0	0	0	0	0	0	0	0	0	0	0	0	0	0	0	0	0	0	0
06:45 AM	0	0	0	0	0	0	0	0	0	0	0	0	0	0	0	0	0	0	0	0	0
Total	0	0	0	0	0	0	0	0	0	0	0	0	0	0	0	0	0	0	0	0	0
07:00 AM	0	0	0	0	0	0	0	0	0	0	0	0	0	0	0	0	0	0	0	0	0
07:15 AM	0	0	0	0	0	0	0	0	0	0	0	0	0	0	0	0	0	0	0	0	0
07:30 AM	0	0	0	0	0	0	0	0	0	0	0	0	0	0	0	0	0	0	0	0	0
07:45 AM	0	0	0	0	0	0	0	0	0	0	0	0	0	0	0	0	0	0	0	0	0
Total	0	0	0	0	0	0	0	0	0	0	0	0	0	0	0	0	0	0	0	0	0
08:00 AM	0	0	0	0	0	0	0	0	0	0	0	1	0	0	1	0	0	0	0	0	1
08:15 AM	0	0	0	0	0	0	0	0	0	0	0	1	0	0	1	0	0	0	0	0	1
08:30 AM	0	1	0	0	1	0	0	0	0	0	0	0	0	0	0	0	0	0	0	0	1
08:45 AM	0	0	0	0	0	0	0	0	0	0	0	0	0	0	0	0	0	0	0	0	0
Total	0	1	0	0	1	0	0	0	0	0	0	2	0	0	2	0	0	0	0	0	3
09:00 AM	0	0	0	0	0	0	0	0	0	0	0	0	0	0	0	0	0	0	0	0	0
09:15 AM	0	0	0	0	0	0	0	0	0	0	0	0	0	0	0	0	0	0	0	0	0
09:30 AM	0	0	0	0	0	0	0	0	0	0	0	0	0	0	0	0	0	0	0	0	0
09:45 AM	0	0	0	0	0	0	0	0	0	0	0	0	0	0	0	0	0	0	0	0	0
Total	0	0	0	0	0	0	0	0	0	0	0	0	0	0	0	0	0	0	0	0	0
10:00 AM	0	0	0	0	0	0	0	0	0	0	0	0	0	0	0	0	0	0	0	0	0
10:15 AM	0	0	0	0	0	0	0	0	0	0	0	0	0	0	0	0	0	0	0	0	0
10:30 AM	0	0	0	0	0	0	0	0	0	0	0	0	0	0	0	0	0	0	0	0	0
10:45 AM	0	0	0	0	0	0	0	0	0	0	0	0	0	0	0	0	0	0	0	0	0
Total	0	0	0	0	0	0	0	0	0	0	0	0	0	0	0	0	0	0	0	0	0
11:00 AM	0	0	0	0	0	0	0	0	0	0	0	0	0	0	0	0	0	0	0	0	0
11:15 AM	0	0	0	0	0	0	0	0	0	0	0	0	0	0	0	0	0	0	0	0	0
11:30 AM	0	0	0	0	0	0	0	0	0	0	0	1	0	0	1	0	0	0	0	0	1
11:45 AM	0	0	0	0	0	0	0	0	0	0	0	1	0	0	1	0	0	0	0	0	1
Total	0	0	0	0	0	0	0	0	0	0	0	2	0	0	2	0	0	0	0	0	2
12:00 PM	0	0	0	0	0	0	0	0	0	0	0	0	0	0	0	0	0	0	0	0	0
12:15 PM	0	0	0	0	0	0	0	0	0	0	0	0	0	0	0	0	0	0	0	0	0
12:30 PM	0	0	0	0	0	0	0	0	0	0	0	0	0	0	0	0	0	0	0	0	0
12:45 PM	0	2	0	0	2	0	0	0	0	0	0	1	0	0	1	0	0	0	0	0	3
Total	0	2	0	0	2	0	0	0	0	0	0	1	0	0	1	0	0	0	0	0	3
01:00 PM	0	0	0	0	0	0	0	0	0	0	0	0	0	0	0	0	0	0	0	0	0
01:15 PM	0	0	0	0	0	0	0	0	0	0	0	0	0	0	0	0	0	0	0	0	0
01:30 PM	0	0	0	0	0	0	0	0	0	0	0	0	0	0	0	0	0	0	0	0	0
01:45 PM	0	0	0	0	0	0	0	0	0	0	0	0	0	0	0	0	0	0	0	0	0
Total	0	0	0	0	0	0	0	0	0	0	0	0	0	0	0	0	0	0	0	0	0

Traffic Data Service

San Jose, CA
(408) 622-4787
tdsbay@cs.com

File Name : Recology 3-28-18 FINAL
Site Code : 00000002
Start Date : 3/28/2018
Page No : 2

Groups Printed- East Bay Tire

	ROGERS AVE Southbound					Westbound					ROGERS AVE Northbound					RECOLOGY DW Eastbound					
Start Time	Right	Thru	Left	Peds	App. Total	Right	Thru	Left	Peds	App. Total	Right	Thru	Left	Peds	App. Total	Right	Thru	Left	Peds	App. Total	Int. Total
02:00 PM	0	1	0	0	1	0	0	0	0	0	0	0	0	0	0	0	0	0	0	0	1
02:15 PM	0	0	0	0	0	0	0	0	0	0	0	0	0	0	0	0	0	0	0	0	0
02:30 PM	0	0	0	0	0	0	0	0	0	0	0	1	0	0	1	0	0	0	0	0	1
02:45 PM	0	3	0	0	3	0	0	0	0	0	0	0	0	0	0	0	0	0	0	0	3
Total	0	4	0	0	4	0	0	0	0	0	0	1	0	0	1	0	0	0	0	0	5
03:00 PM	0	0	0	0	0	0	0	0	0	0	0	0	0	0	0	0	0	0	0	0	0
03:15 PM	0	0	0	0	0	0	0	0	0	0	0	0	0	0	0	1	0	0	0	1	1
03:30 PM	0	0	0	0	0	0	0	0	0	0	0	0	0	0	0	0	0	0	0	0	0
03:45 PM	0	0	0	0	0	0	0	0	0	0	0	0	0	0	0	0	0	0	0	0	0
Total	0	0	0	0	0	0	0	0	0	0	0	0	0	0	0	1	0	0	0	1	1
04:00 PM	0	1	0	0	1	0	0	0	0	0	0	0	0	0	0	0	0	0	0	0	1
04:15 PM	0	0	0	0	0	0	0	0	0	0	0	0	0	0	0	0	0	0	0	0	0
04:30 PM	0	0	0	0	0	0	0	0	0	0	0	0	0	0	0	0	0	0	0	0	0
04:45 PM	0	0	0	0	0	0	0	0	0	0	0	0	0	0	0	0	0	0	0	0	0
Total	0	1	0	0	1	0	0	0	0	0	0	0	0	0	0	0	0	0	0	0	1
05:00 PM	0	0	0	0	0	0	0	0	0	0	0	0	0	0	0	0	0	0	0	0	0
05:15 PM	0	0	0	0	0	0	0	0	0	0	0	0	0	0	0	0	0	0	0	0	0
05:30 PM	0	0	0	0	0	0	0	0	0	0	0	0	0	0	0	0	0	0	0	0	0
05:45 PM	0	0	0	0	0	0	0	0	0	0	0	0	0	0	0	0	0	0	0	0	0
Total	0	0	0	0	0	0	0	0	0	0	0	0	0	0	0	0	0	0	0	0	0
Grand Total	0	8	0	0	8	0	0	0	0	0	0	6	0	0	6	1	0	0	0	1	15
Apprch %	0	100	0	0		0	0	0	0		0	100	0	0		100	0	0	0		
Total %	0	53.3	0	0	53.3	0	0	0	0	0	0	40	0	0	40	6.7	0	0	0	6.7	

	ROGERS AVE Southbound				Westbound				ROGERS AVE Northbound				RECOLOGY DW Eastbound				
Start Time	Right	Thru	Left	App. Total	Right	Thru	Left	App. Total	Right	Thru	Left	App. Total	Right	Thru	Left	App. Total	Int. Total
Peak Hour Analysis From 04:00 AM to 05:45 PM - Peak 1 of 1																	
Peak Hour for Entire Intersection Begins at 02:00 PM																	
02:00 PM	0	1	0	1	0	0	0	0	0	0	0	0	0	0	0	0	1
02:15 PM	0	0	0	0	0	0	0	0	0	0	0	0	0	0	0	0	0
02:30 PM	0	0	0	0	0	0	0	0	0	**1**	0	**1**	0	0	0	0	1
02:45 PM	0	**3**	0	**3**	0	0	0	0	0	0	0	0	0	0	0	0	**3**
Total Volume	0	4	0	4	0	0	0	0	0	1	0	1	0	0	0	0	5
% App. Total	0	100	0		0	0	0		0	100	0		0	0	0		
PHF	.000	.333	.000	.333	.000	.000	.000	.000	.000	.250	.000	.250	.000	.000	.000	.000	.417

Traffic Data Service

San Jose, CA
(408) 622-4787
tdsbay@cs.com

File Name : Recology 3-28-18 FINAL
Site Code : 00000002
Start Date : 3/28/2018
Page No : 3

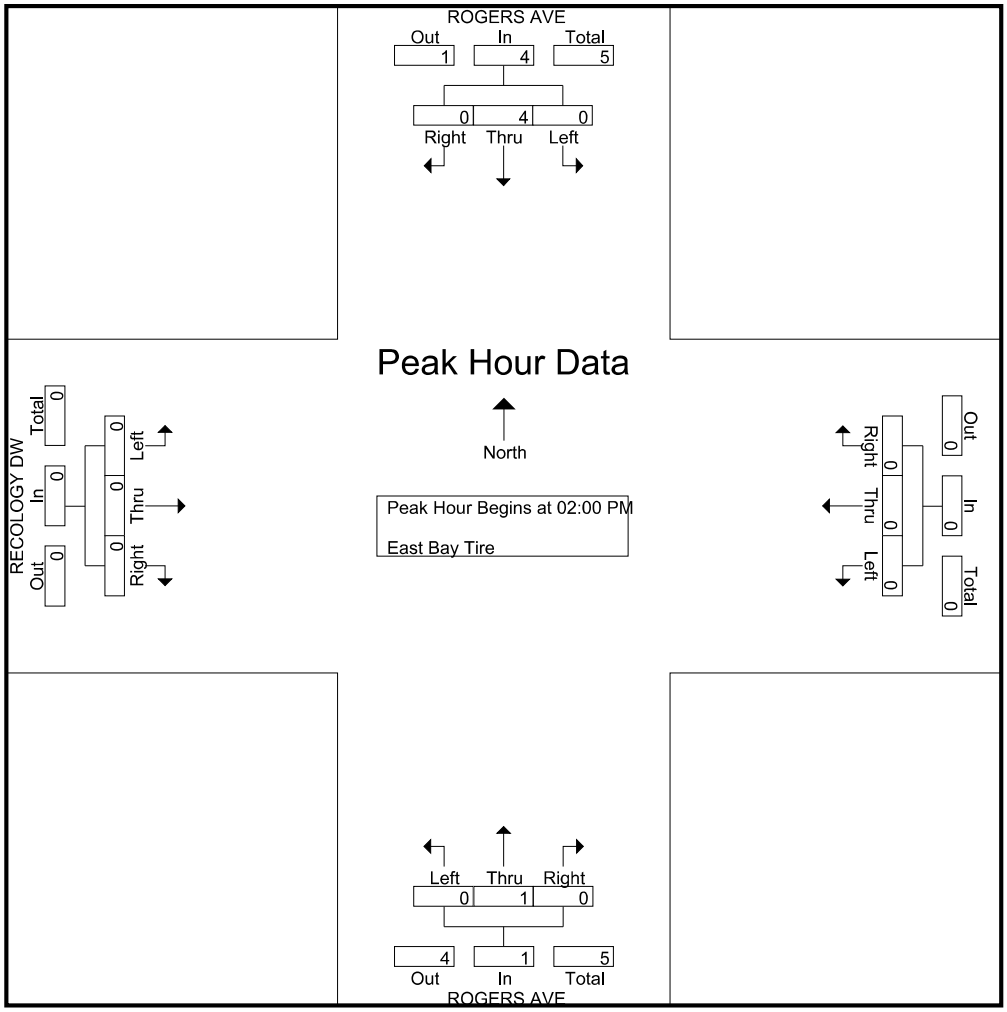

Traffic Data Service

San Jose, CA
(408) 622-4787
tdsbay@cs.com

File Name : Recology 3-28-18 FINAL
Site Code : 00000002
Start Date : 3/28/2018
Page No : 1

Groups Printed- Heavy

	ROGERS AVE Southbound					Westbound					ROGERS AVE Northbound					RECOLOGY DW Eastbound					
Start Time	Right	Thru	Left	Peds	App. Total	Right	Thru	Left	Peds	App. Total	Right	Thru	Left	Peds	App. Total	Right	Thru	Left	Peds	App. Total	Int. Total
04:00 AM	0	1	0	0	1	0	0	0	0	0	0	0	0	0	0	0	0	0	0	0	1
04:15 AM	0	0	0	0	0	0	0	0	0	0	0	2	0	0	2	0	0	0	0	0	2
04:30 AM	0	0	0	0	0	0	0	0	0	0	0	1	0	0	1	0	0	0	0	0	1
04:45 AM	0	1	0	0	1	0	0	0	0	0	0	1	0	0	1	0	0	0	0	0	2
Total	0	2	0	0	2	0	0	0	0	0	0	4	0	0	4	0	0	0	0	0	6
05:00 AM	0	1	0	0	1	0	0	0	0	0	0	1	0	0	1	0	0	0	0	0	2
05:15 AM	0	1	0	0	1	0	0	0	0	0	0	0	0	0	0	0	0	0	0	0	1
05:30 AM	0	2	0	0	2	0	0	0	0	0	0	3	0	0	3	0	0	0	0	0	5
05:45 AM	0	2	0	0	2	0	0	0	0	0	0	2	0	0	2	0	0	0	0	0	4
Total	0	6	0	0	6	0	0	0	0	0	0	6	0	0	6	0	0	0	0	0	12
06:00 AM	0	3	0	0	3	0	0	0	0	0	0	1	1	0	2	0	0	0	0	0	5
06:15 AM	0	0	0	0	0	0	0	0	0	0	0	1	0	0	1	0	0	0	0	0	1
06:30 AM	0	6	0	0	6	0	0	0	0	0	0	1	0	0	1	0	0	0	0	0	7
06:45 AM	0	3	0	0	3	0	0	0	0	0	0	2	0	0	2	1	0	0	0	1	6
Total	0	12	0	0	12	0	0	0	0	0	0	5	1	0	6	1	0	0	0	1	19
07:00 AM	0	5	0	0	5	0	0	0	0	0	0	1	0	0	1	0	0	0	0	0	6
07:15 AM	0	0	0	0	0	0	0	0	0	0	0	5	0	0	5	0	0	0	0	0	5
07:30 AM	0	2	0	0	2	0	0	0	0	0	0	1	0	0	1	0	0	0	0	0	3
07:45 AM	0	4	0	0	4	0	0	0	0	0	0	2	0	0	2	0	0	0	0	0	6
Total	0	11	0	0	11	0	0	0	0	0	0	9	0	0	9	0	0	0	0	0	20
08:00 AM	0	9	0	0	9	0	0	0	0	0	0	2	0	0	2	0	0	0	0	0	11
08:15 AM	0	2	0	0	2	0	0	0	0	0	0	4	0	0	4	0	0	0	0	0	6
08:30 AM	0	4	0	0	4	0	0	0	0	0	0	2	0	0	2	0	0	0	0	0	6
08:45 AM	0	4	0	0	4	0	0	0	0	0	0	3	0	0	3	0	0	0	0	0	7
Total	0	19	0	0	19	0	0	0	0	0	0	11	0	0	11	0	0	0	0	0	30
09:00 AM	0	4	0	0	4	0	0	0	0	0	0	4	0	0	4	1	0	0	0	1	9
09:15 AM	0	3	0	0	3	0	0	0	0	0	0	6	0	0	6	0	0	0	0	0	9
09:30 AM	0	3	0	0	3	0	0	0	0	0	0	4	1	0	5	0	0	0	0	0	8
09:45 AM	0	1	0	0	1	0	0	0	0	0	0	5	0	0	5	0	0	1	0	1	7
Total	0	11	0	0	11	0	0	0	0	0	0	19	1	0	20	1	0	1	0	2	33
10:00 AM	0	1	0	0	1	0	0	0	0	0	0	4	0	0	4	0	0	0	0	0	5
10:15 AM	0	5	0	0	5	0	0	0	0	0	0	7	1	0	8	0	0	0	0	0	13
10:30 AM	0	3	0	0	3	0	0	0	0	0	0	3	0	0	3	0	0	0	0	0	6
10:45 AM	0	4	0	0	4	0	0	0	0	0	0	5	0	0	5	1	0	0	0	1	10
Total	0	13	0	0	13	0	0	0	0	0	0	19	1	0	20	1	0	0	0	1	34
11:00 AM	0	4	0	0	4	0	0	0	0	0	0	4	0	0	4	0	0	0	0	0	8
11:15 AM	0	5	0	0	5	0	0	0	0	0	0	8	0	0	8	0	0	0	0	0	13
11:30 AM	0	8	0	0	8	0	0	0	0	0	0	3	1	0	4	0	0	0	0	0	12
11:45 AM	0	2	0	0	2	0	0	0	0	0	0	4	0	0	4	1	0	0	0	1	7
Total	0	19	0	0	19	0	0	0	0	0	0	19	1	0	20	1	0	0	0	1	40
12:00 PM	0	6	0	0	6	0	0	0	0	0	0	3	0	0	3	0	0	0	0	0	9
12:15 PM	0	4	0	0	4	0	0	0	0	0	0	5	0	0	5	0	0	0	0	0	9
12:30 PM	0	4	0	0	4	0	0	0	0	0	0	3	0	0	3	0	0	0	0	0	7
12:45 PM	0	4	0	0	4	0	0	0	0	0	0	6	0	0	6	0	0	0	0	0	10
Total	0	18	0	0	18	0	0	0	0	0	0	17	0	0	17	0	0	0	0	0	35
01:00 PM	0	5	0	0	5	0	0	0	0	0	0	7	0	0	7	0	0	0	0	0	12
01:15 PM	0	3	0	0	3	0	0	0	0	0	0	10	0	0	10	0	0	0	0	0	13
01:30 PM	0	3	0	0	3	0	0	0	0	0	0	4	0	0	4	0	0	0	0	0	7
01:45 PM	0	4	0	0	4	0	0	0	0	0	0	4	0	0	4	0	0	0	0	0	8
Total	0	15	0	0	15	0	0	0	0	0	0	25	0	0	25	0	0	0	0	0	40

Traffic Data Service

San Jose, CA
(408) 622-4787
tdsbay@cs.com

File Name : Recology 3-28-18 FINAL
Site Code : 00000002
Start Date : 3/28/2018
Page No : 2

Groups Printed- Heavy

	ROGERS AVE Southbound					Westbound					ROGERS AVE Northbound					RECOLOGY DW Eastbound					
Start Time	Right	Thru	Left	Peds	App. Total	Right	Thru	Left	Peds	App. Total	Right	Thru	Left	Peds	App. Total	Right	Thru	Left	Peds	App. Total	Int. Total
02:00 PM	0	4	0	0	4	0	0	0	0	0	0	5	0	0	5	0	0	0	0	0	9
02:15 PM	0	3	0	0	3	0	0	0	0	0	0	4	0	0	4	0	0	0	0	0	7
02:30 PM	0	3	0	0	3	0	0	0	0	0	0	2	0	0	2	0	0	0	0	0	5
02:45 PM	0	3	0	0	3	0	0	0	0	0	0	2	0	0	2	0	0	0	0	0	5
Total	0	13	0	0	13	0	0	0	0	0	0	13	0	0	13	0	0	0	0	0	26
03:00 PM	0	4	0	0	4	0	0	0	0	0	0	0	0	0	0	0	0	0	0	0	4
03:15 PM	0	2	0	0	2	0	0	0	0	0	0	2	0	0	2	0	0	0	0	0	4
03:30 PM	0	2	0	0	2	0	0	0	0	0	0	1	0	0	1	0	0	0	0	0	3
03:45 PM	0	2	0	0	2	0	0	0	0	0	0	1	0	0	1	0	0	0	0	0	3
Total	0	10	0	0	10	0	0	0	0	0	0	4	0	0	4	0	0	0	0	0	14
04:00 PM	0	5	0	0	5	0	0	0	0	0	0	2	0	0	2	0	0	0	0	0	7
04:15 PM	0	1	0	0	1	0	0	0	0	0	0	2	0	0	2	0	0	0	0	0	3
04:30 PM	0	3	0	0	3	0	0	0	0	0	0	1	0	0	1	0	0	0	0	0	4
04:45 PM	0	3	0	0	3	0	0	0	0	0	0	1	0	0	1	0	0	0	0	0	4
Total	0	12	0	0	12	0	0	0	0	0	0	6	0	0	6	0	0	0	0	0	18
05:00 PM	0	4	0	0	4	0	0	0	0	0	0	0	0	0	0	0	0	0	0	0	4
05:15 PM	0	2	0	0	2	0	0	0	0	0	0	0	0	0	0	0	0	0	0	0	2
05:30 PM	0	0	0	0	0	0	0	0	0	0	0	0	0	0	0	0	0	0	0	0	0
05:45 PM	0	2	0	0	2	0	0	0	0	0	0	1	0	0	1	0	0	0	0	0	3
Total	0	8	0	0	8	0	0	0	0	0	0	1	0	0	1	0	0	0	0	0	9
Grand Total	0	169	0	0	169	0	0	0	0	0	0	158	4	0	162	4	0	1	0	5	336
Apprch %	0	100	0	0		0	0	0	0		0	97.5	2.5	0		80	0	20	0		
Total %	0	50.3	0	0	50.3	0	0	0	0	0	0	47	1.2	0	48.2	1.2	0	0.3	0	1.5	

	ROGERS AVE Southbound				Westbound				ROGERS AVE Northbound				RECOLOGY DW Eastbound				
Start Time	Right	Thru	Left	App. Total	Right	Thru	Left	App. Total	Right	Thru	Left	App. Total	Right	Thru	Left	App. Total	Int. Total
Peak Hour Analysis From 04:00 AM to 05:45 PM - Peak 1 of 1																	
Peak Hour for Entire Intersection Begins at 10:45 AM																	
10:45 AM	0	4	0	4	0	0	0	0	0	5	0	5	**1**	0	0	**1**	10
11:00 AM	0	4	0	4	0	0	0	0	0	4	0	4	0	0	0	0	8
11:15 AM	0	5	0	5	0	0	0	0	0	**8**	0	**8**	0	0	0	0	**13**
11:30 AM	0	**8**	0	**8**	0	0	0	0	0	3	**1**	4	0	0	0	0	12
Total Volume	0	21	0	21	0	0	0	0	0	20	1	21	1	0	0	1	43
% App. Total	0	100	0		0	0	0		0	95.2	4.8		100	0	0		
PHF	.000	.656	.000	.656	.000	.000	.000	.000	.000	.625	.250	.656	.250	.000	.000	.250	.827

Traffic Data Service

San Jose, CA
(408) 622-4787
tdsbay@cs.com

File Name : Recology 3-28-18 FINAL
Site Code : 00000002
Start Date : 3/28/2018
Page No : 3

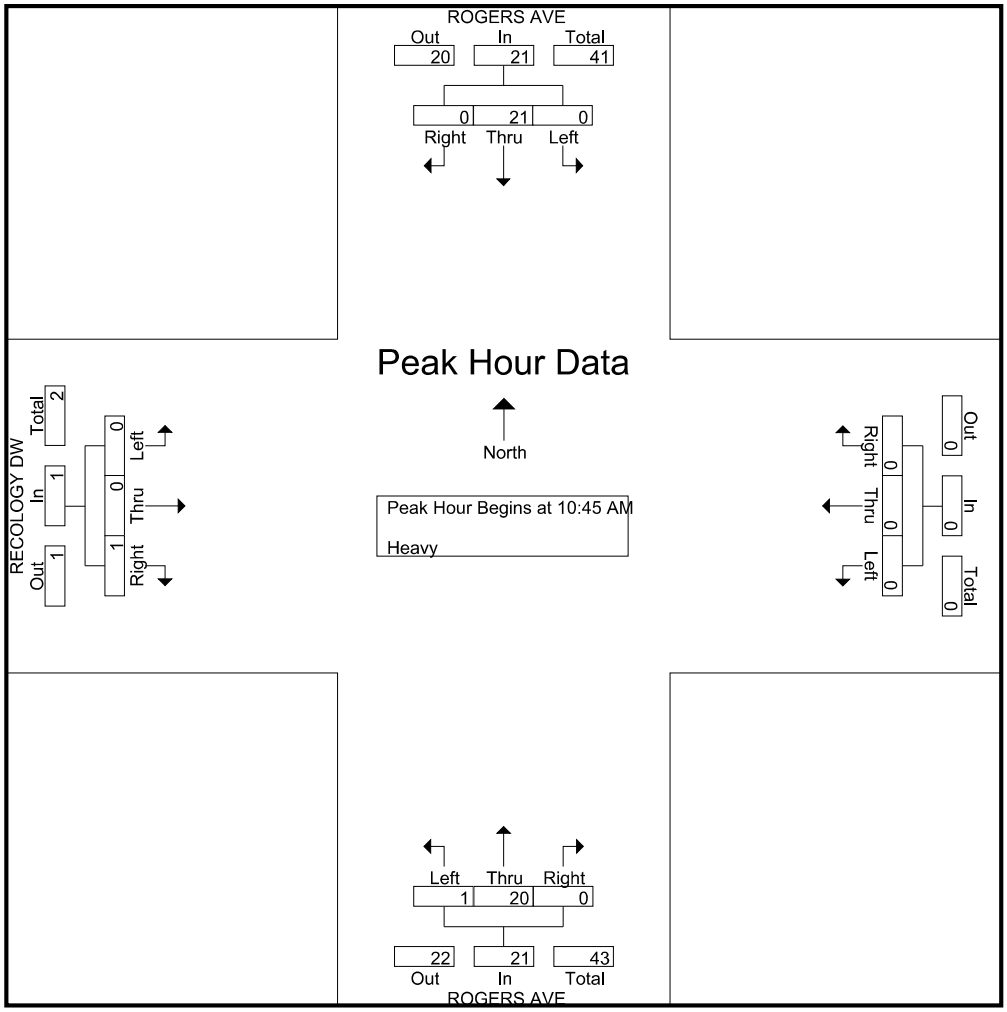

Traffic Data Service

San Jose, CA
(408) 622-4787
tdsbay@cs.com

File Name : Recology 3-28-18 FINAL
Site Code : 00000002
Start Date : 3/28/2018
Page No : 1

Groups Printed- Lights

	ROGERS AVE Southbound					Westbound					ROGERS AVE Northbound					RECOLOGY DW Eastbound					
Start Time	Right	Thru	Left	Peds	App. Total	Right	Thru	Left	Peds	App. Total	Right	Thru	Left	Peds	App. Total	Right	Thru	Left	Peds	App. Total	Int. Total
04:00 AM	0	10	0	0	10	0	0	0	0	0	0	4	0	0	4	0	0	0	0	0	14
04:15 AM	0	5	0	0	5	0	0	0	0	0	0	9	0	0	9	0	0	0	0	0	14
04:30 AM	0	3	0	0	3	0	0	0	0	0	0	9	0	0	9	0	0	0	0	0	12
04:45 AM	0	4	0	0	4	0	0	0	0	0	0	21	0	0	21	0	0	0	0	0	25
Total	0	22	0	0	22	0	0	0	0	0	0	43	0	0	43	0	0	0	0	0	65
05:00 AM	0	9	0	0	9	0	0	0	0	0	0	23	0	0	23	0	0	0	0	0	32
05:15 AM	0	8	0	0	8	0	0	0	0	0	0	33	0	0	33	0	0	0	1	1	42
05:30 AM	0	8	0	0	8	0	0	0	0	0	0	29	0	0	29	0	0	0	0	0	37
05:45 AM	0	12	0	0	12	0	0	0	0	0	0	57	0	0	57	0	0	0	0	0	69
Total	0	37	0	0	37	0	0	0	0	0	0	142	0	0	142	0	0	0	1	1	180
06:00 AM	0	17	0	0	17	0	0	0	1	1	0	40	0	0	40	0	0	0	1	1	59
06:15 AM	0	8	0	0	8	0	0	0	0	0	0	27	0	0	27	0	0	0	2	2	37
06:30 AM	0	15	0	0	15	0	0	0	0	0	0	31	0	0	31	0	0	0	0	0	46
06:45 AM	0	27	0	0	27	0	0	0	0	0	0	36	0	0	36	0	0	0	1	1	64
Total	0	67	0	0	67	0	0	0	1	1	0	134	0	0	134	0	0	0	4	4	206
07:00 AM	0	18	0	1	19	0	0	0	0	0	0	53	0	0	53	0	0	0	0	0	72
07:15 AM	2	19	0	0	21	0	0	0	1	1	0	52	1	0	53	0	0	0	0	0	75
07:30 AM	1	15	0	0	16	0	0	0	1	1	0	44	1	0	45	0	0	0	0	0	62
07:45 AM	1	20	0	0	21	0	0	0	0	0	0	70	1	1	72	1	0	0	0	1	94
Total	4	72	0	1	77	0	0	0	2	2	0	219	3	1	223	1	0	0	0	1	303
08:00 AM	0	24	0	0	24	0	0	0	0	0	0	75	1	0	76	0	0	0	0	0	100
08:15 AM	0	18	0	0	18	0	0	0	0	0	0	56	0	0	56	0	0	0	0	0	74
08:30 AM	0	25	0	0	25	0	0	0	1	1	0	42	0	0	42	0	0	0	0	0	68
08:45 AM	0	20	0	0	20	0	0	0	0	0	0	58	0	0	58	0	0	0	0	0	78
Total	0	87	0	0	87	0	0	0	1	1	0	231	1	0	232	0	0	0	0	0	320
09:00 AM	0	32	0	0	32	0	0	0	0	0	0	52	0	0	52	0	0	0	1	1	85
09:15 AM	0	17	0	0	17	0	0	0	0	0	0	62	0	0	62	0	0	0	0	0	79
09:30 AM	0	20	0	0	20	0	0	0	0	0	0	43	0	0	43	0	0	1	0	1	64
09:45 AM	0	18	0	0	18	0	0	0	0	0	0	44	1	0	45	0	0	0	0	0	63
Total	0	87	0	0	87	0	0	0	0	0	0	201	1	0	202	0	0	1	1	2	291
10:00 AM	0	23	0	0	23	0	0	0	0	0	0	36	0	0	36	0	0	0	0	0	59
10:15 AM	0	41	0	0	41	0	0	0	0	0	0	28	0	0	28	0	0	0	0	0	69
10:30 AM	0	30	0	0	30	0	0	0	0	0	0	47	0	0	47	0	0	1	0	1	78
10:45 AM	0	33	0	0	33	0	0	0	0	0	0	46	0	0	46	0	0	0	0	0	79
Total	0	127	0	0	127	0	0	0	0	0	0	157	0	0	157	0	0	1	0	1	285
11:00 AM	0	29	0	0	29	0	0	0	1	1	0	31	0	0	31	0	0	0	0	0	61
11:15 AM	0	36	0	0	36	0	0	0	0	0	0	38	0	0	38	2	0	0	0	2	76
11:30 AM	0	26	0	0	26	0	0	0	0	0	0	34	1	0	35	0	0	0	0	0	61
11:45 AM	0	18	0	0	18	0	0	0	0	0	0	34	0	0	34	1	0	0	0	1	53
Total	0	109	0	0	109	0	0	0	1	1	0	137	1	0	138	3	0	0	0	3	251
12:00 PM	0	33	0	0	33	0	0	0	0	0	0	24	0	0	24	0	0	0	0	0	57
12:15 PM	0	34	0	0	34	0	0	0	0	0	0	36	0	0	36	0	0	0	0	0	70
12:30 PM	0	28	0	0	28	0	0	0	0	0	0	43	0	0	43	0	0	0	1	1	72
12:45 PM	0	35	0	0	35	0	0	0	0	0	0	28	0	0	28	0	0	0	0	0	63
Total	0	130	0	0	130	0	0	0	0	0	0	131	0	0	131	0	0	0	1	1	262
01:00 PM	0	38	0	0	38	0	0	0	2	2	0	38	0	0	38	1	0	0	0	1	79
01:15 PM	0	33	0	0	33	0	0	0	0	0	0	36	0	0	36	0	0	0	1	1	70
01:30 PM	0	43	0	0	43	0	0	0	0	0	0	41	0	0	41	0	0	0	0	0	84
01:45 PM	0	34	0	0	34	0	0	0	1	1	0	37	0	0	37	0	0	0	0	0	72
Total	0	148	0	0	148	0	0	0	3	3	0	152	0	0	152	1	0	0	1	2	305

Traffic Data Service

San Jose, CA
(408) 622-4787
tdsbay@cs.com

File Name : Recology 3-28-18 FINAL
Site Code : 00000002
Start Date : 3/28/2018
Page No : 2

Groups Printed- Lights

	ROGERS AVE Southbound					Westbound					ROGERS AVE Northbound					RECOLOGY DW Eastbound					
Start Time	Right	Thru	Left	Peds	App. Total	Right	Thru	Left	Peds	App. Total	Right	Thru	Left	Peds	App. Total	Right	Thru	Left	Peds	App. Total	Int. Total
02:00 PM	0	62	0	0	62	0	0	0	0	0	0	38	0	0	38	2	0	0	1	3	103
02:15 PM	0	48	0	0	48	0	0	0	0	0	0	39	0	1	40	0	0	0	0	0	88
02:30 PM	0	59	0	0	59	0	0	0	0	0	0	41	0	0	41	0	0	0	0	0	100
02:45 PM	0	58	0	0	58	0	0	0	0	0	0	22	0	0	22	0	0	0	0	0	80
Total	0	227	0	0	227	0	0	0	0	0	0	140	0	1	141	2	0	0	1	3	371
03:00 PM	1	70	0	1	72	0	0	0	0	0	0	23	0	0	23	0	0	0	1	1	96
03:15 PM	0	55	0	0	55	0	0	0	0	0	0	18	0	0	18	0	0	0	0	0	73
03:30 PM	0	67	0	0	67	0	0	0	0	0	0	25	0	0	25	0	0	0	0	0	92
03:45 PM	0	52	0	0	52	0	0	0	0	0	0	33	0	0	33	0	0	0	0	0	85
Total	1	244	0	1	246	0	0	0	0	0	0	99	0	0	99	0	0	0	1	1	346
04:00 PM	0	72	0	0	72	0	0	0	0	0	0	36	0	0	36	1	0	0	1	2	110
04:15 PM	0	62	0	0	62	0	0	0	0	0	0	35	0	0	35	3	0	2	0	5	102
04:30 PM	0	81	0	0	81	0	0	0	0	0	0	23	0	1	24	0	0	0	0	0	105
04:45 PM	0	54	0	1	55	0	0	0	0	0	0	26	0	0	26	0	0	0	2	2	83
Total	0	269	0	1	270	0	0	0	0	0	0	120	0	1	121	4	0	2	3	9	400
05:00 PM	0	84	0	0	84	0	0	0	0	0	0	28	0	0	28	0	0	0	0	0	112
05:15 PM	0	81	0	0	81	0	0	0	0	0	0	16	0	0	16	0	0	0	1	1	98
05:30 PM	0	93	0	0	93	0	0	0	0	0	0	16	0	0	16	0	0	0	0	0	109
05:45 PM	0	63	0	0	63	0	0	0	0	0	0	15	0	0	15	0	0	0	0	0	78
Total	0	321	0	0	321	0	0	0	0	0	0	75	0	0	75	0	0	0	1	1	397
Grand Total	5	1947	0	3	1955	0	0	0	8	8	0	1981	6	3	1990	11	0	4	14	29	3982
Apprch %	0.3	99.6	0	0.2		0	0	0	100		0	99.5	0.3	0.2		37.9	0	13.8	48.3		
Total %	0.1	48.9	0	0.1	49.1	0	0	0	0.2	0.2	0	49.7	0.2	0.1	50	0.3	0	0.1	0.4	0.7	

	ROGERS AVE Southbound				Westbound				ROGERS AVE Northbound				RECOLOGY DW Eastbound				
Start Time	Right	Thru	Left	App. Total	Right	Thru	Left	App. Total	Right	Thru	Left	App. Total	Right	Thru	Left	App. Total	Int. Total
Peak Hour Analysis From 04:00 AM to 05:45 PM - Peak 1 of 1																	
Peak Hour for Entire Intersection Begins at 03:45 PM																	
03:45 PM	0	52	0	52	0	0	0	0	0	33	0	33	0	0	0	0	85
04:00 PM	0	72	0	72	0	0	0	0	0	**36**	0	**36**	1	0	0	1	**109**
04:15 PM	0	62	0	62	0	0	0	0	0	35	0	35	**3**	0	**2**	**5**	102
04:30 PM	0	**81**	0	**81**	0	0	0	0	0	23	0	23	0	0	0	0	104
Total Volume	0	267	0	267	0	0	0	0	0	127	0	127	4	0	2	6	400
% App. Total	0	100	0		0	0	0		0	100	0		66.7	0	33.3		
PHF	.000	.824	.000	.824	.000	.000	.000	.000	.000	.882	.000	.882	.333	.000	.250	.300	.917

Traffic Data Service

San Jose, CA
(408) 622-4787
tdsbay@cs.com

File Name : Recology 3-28-18 FINAL
Site Code : 00000002
Start Date : 3/28/2018
Page No : 3

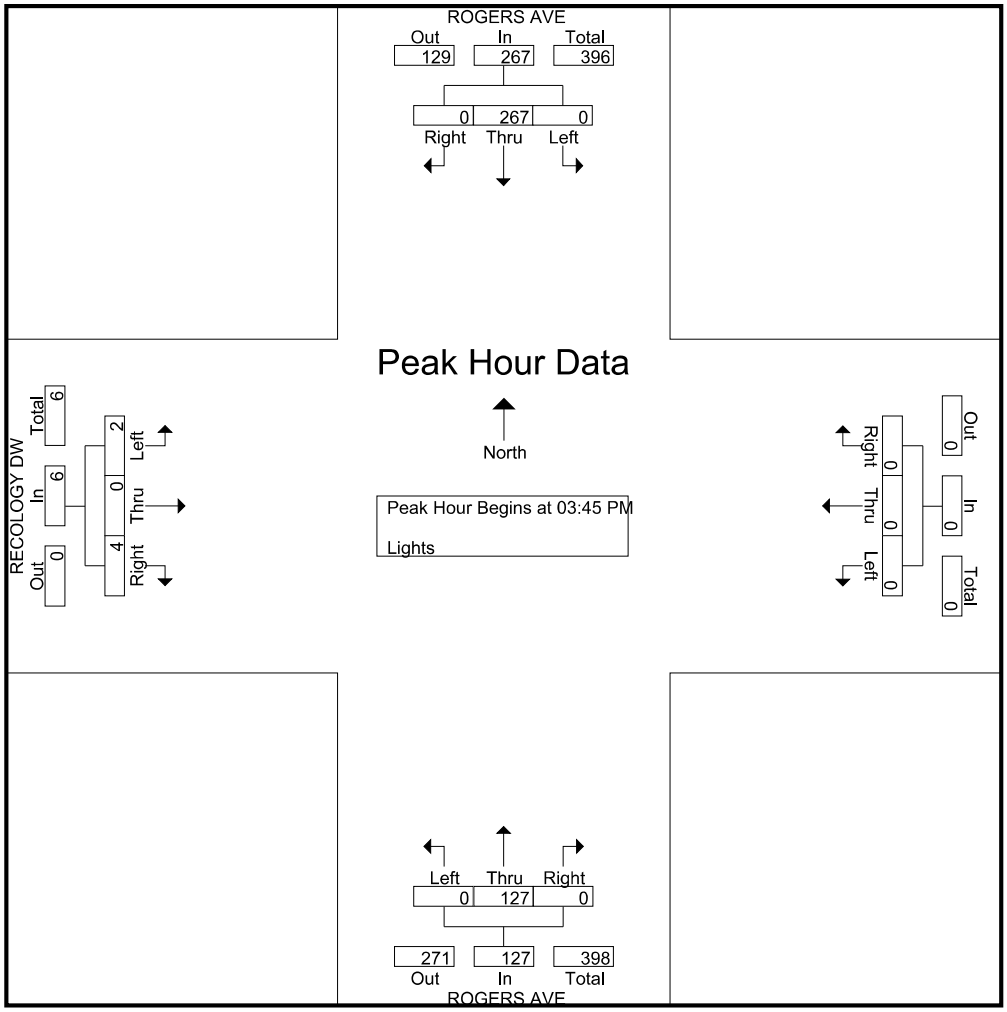

Traffic Data Service

San Jose, CA
(408) 622-4787
tdsbay@cs.com

File Name : Recology 3-28-18 FINAL
Site Code : 00000002
Start Date : 3/28/2018
Page No : 1

Groups Printed- Recology

	ROGERS AVE Southbound					Westbound					ROGERS AVE Northbound					RECOLOGY DW Eastbound					
Start Time	Right	Thru	Left	Peds	App. Total	Right	Thru	Left	Peds	App. Total	Right	Thru	Left	Peds	App. Total	Right	Thru	Left	Peds	App. Total	Int. Total
04:00 AM	0	0	0	0	0	0	0	0	0	0	0	0	0	0	0	0	0	0	0	0	0
04:15 AM	0	0	0	0	0	0	0	0	0	0	0	0	2	0	2	0	0	0	0	0	2
04:30 AM	0	0	0	0	0	0	0	0	0	0	0	0	0	0	0	2	0	0	0	2	2
04:45 AM	0	0	0	0	0	0	0	0	0	0	0	0	0	0	0	0	0	0	0	0	0
Total	0	0	0	0	0	0	0	0	0	0	0	0	2	0	2	2	0	0	0	2	4
05:00 AM	0	0	0	0	0	0	0	0	0	0	0	0	1	0	1	0	0	0	0	0	1
05:15 AM	0	1	0	0	1	0	0	0	0	0	0	0	1	0	1	0	0	0	0	0	2
05:30 AM	1	0	0	0	1	0	0	0	0	0	0	0	1	0	1	2	0	0	0	2	4
05:45 AM	0	0	0	0	0	0	0	0	0	0	0	0	0	0	0	0	0	0	0	0	0
Total	1	1	0	0	2	0	0	0	0	0	0	0	3	0	3	2	0	0	0	2	7
06:00 AM	0	0	0	0	0	0	0	0	0	0	0	0	1	0	1	1	0	0	0	1	2
06:15 AM	0	0	0	0	0	0	0	0	0	0	0	0	0	0	0	1	0	0	0	1	1
06:30 AM	0	0	0	0	0	0	0	0	0	0	0	0	0	0	0	0	0	0	0	0	0
06:45 AM	0	0	0	0	0	0	0	0	0	0	0	0	0	0	0	0	0	0	0	0	0
Total	0	0	0	0	0	0	0	0	0	0	0	0	1	0	1	2	0	0	0	2	3
07:00 AM	0	0	0	0	0	0	0	0	0	0	0	0	0	0	0	0	0	0	0	0	0
07:15 AM	0	0	0	0	0	0	0	0	0	0	0	0	0	0	0	0	0	0	0	0	0
07:30 AM	0	0	0	0	0	0	0	0	0	0	0	0	0	0	0	0	0	0	0	0	0
07:45 AM	0	0	0	0	0	0	0	0	0	0	0	0	0	0	0	0	0	0	0	0	0
Total	0	0	0	0	0	0	0	0	0	0	0	0	0	0	0	0	0	0	0	0	0
08:00 AM	0	0	0	0	0	0	0	0	0	0	0	0	1	0	1	0	0	0	0	0	1
08:15 AM	0	0	0	0	0	0	0	0	0	0	0	0	0	0	0	0	0	0	0	0	0
08:30 AM	0	0	0	0	0	0	0	0	0	0	0	0	0	0	0	0	0	0	0	0	0
08:45 AM	0	0	0	0	0	0	0	0	0	0	0	0	1	0	1	2	0	0	0	2	3
Total	0	0	0	0	0	0	0	0	0	0	0	0	2	0	2	2	0	0	0	2	4
09:00 AM	0	0	0	0	0	0	0	0	0	0	0	0	0	0	0	0	0	0	0	0	0
09:15 AM	0	0	0	0	0	0	0	0	0	0	0	0	1	0	1	0	0	0	0	0	1
09:30 AM	0	0	0	0	0	0	0	0	0	0	0	0	0	0	0	0	0	0	0	0	0
09:45 AM	0	1	0	0	1	0	0	0	0	0	0	0	2	0	2	1	0	0	0	1	4
Total	0	1	0	0	1	0	0	0	0	0	0	0	3	0	3	1	0	0	0	1	5
10:00 AM	0	0	0	0	0	0	0	0	0	0	0	0	0	0	0	1	0	0	0	1	1
10:15 AM	1	0	0	0	1	0	0	0	0	0	0	0	0	0	0	0	0	0	0	0	1
10:30 AM	0	0	0	0	0	0	0	0	0	0	0	0	0	0	0	1	0	0	0	1	1
10:45 AM	0	0	0	0	0	0	0	0	0	0	0	0	1	0	1	0	0	0	0	0	1
Total	1	0	0	0	1	0	0	0	0	0	0	0	1	0	1	2	0	0	0	2	4
11:00 AM	0	0	0	0	0	0	0	0	0	0	0	0	1	0	1	1	0	0	0	1	2
11:15 AM	0	0	0	0	0	0	0	0	0	0	0	0	1	0	1	2	0	0	0	2	3
11:30 AM	0	0	0	0	0	0	0	0	0	0	0	0	1	0	1	0	0	0	0	0	1
11:45 AM	0	0	0	0	0	0	0	0	0	0	0	0	0	0	0	1	0	0	0	1	1
Total	0	0	0	0	0	0	0	0	0	0	0	0	3	0	3	4	0	0	0	4	7
12:00 PM	0	0	0	0	0	0	0	0	0	0	0	0	0	0	0	0	0	0	0	0	0
12:15 PM	0	0	0	0	0	0	0	0	0	0	0	0	0	0	0	0	0	0	0	0	0
12:30 PM	0	0	0	0	0	0	0	0	0	0	0	0	0	0	0	0	0	0	0	0	0
12:45 PM	0	0	0	0	0	0	0	0	0	0	0	0	1	0	1	0	0	0	0	0	1
Total	0	0	0	0	0	0	0	0	0	0	0	0	1	0	1	0	0	0	0	0	1
01:00 PM	0	0	0	0	0	0	0	0	0	0	0	0	0	0	0	1	0	0	0	1	1
01:15 PM	0	0	0	0	0	0	0	0	0	0	0	0	0	0	0	0	0	0	0	0	0
01:30 PM	0	0	0	0	0	0	0	0	0	0	0	0	0	0	0	0	0	0	0	0	0
01:45 PM	0	0	0	0	0	0	0	0	0	0	0	0	0	0	0	0	0	0	0	0	0
Total	0	0	0	0	0	0	0	0	0	0	0	0	0	0	0	1	0	0	0	1	1

Traffic Data Service

San Jose, CA
(408) 622-4787
tdsbay@cs.com

File Name : Recology 3-28-18 FINAL
Site Code : 00000002
Start Date : 3/28/2018
Page No : 2

Groups Printed- Recology

	ROGERS AVE Southbound					Westbound					ROGERS AVE Northbound					RECOLOGY DW Eastbound					
Start Time	Right	Thru	Left	Peds	App. Total	Right	Thru	Left	Peds	App. Total	Right	Thru	Left	Peds	App. Total	Right	Thru	Left	Peds	App. Total	Int. Total
02:00 PM	0	0	0	0	0	0	0	0	0	0	0	0	0	0	0	0	0	0	0	0	0
02:15 PM	0	0	0	0	0	0	0	0	0	0	0	0	0	0	0	0	0	0	0	0	0
02:30 PM	0	0	0	0	0	0	0	0	0	0	0	0	0	0	0	0	0	0	0	0	0
02:45 PM	0	0	0	0	0	0	0	0	0	0	0	0	0	0	0	0	0	0	0	0	0
Total	0	0	0	0	0	0	0	0	0	0	0	0	0	0	0	0	0	0	0	0	0
03:00 PM	0	0	0	0	0	0	0	0	0	0	0	0	0	0	0	0	0	0	0	0	0
03:15 PM	0	0	0	0	0	0	0	0	0	0	0	0	0	0	0	0	0	0	0	0	0
03:30 PM	0	0	0	0	0	0	0	0	0	0	0	0	0	0	0	0	0	0	0	0	0
03:45 PM	0	0	0	0	0	0	0	0	0	0	0	0	0	0	0	0	0	0	0	0	0
Total	0	0	0	0	0	0	0	0	0	0	0	0	0	0	0	0	0	0	0	0	0
04:00 PM	0	0	0	0	0	0	0	0	0	0	0	0	0	0	0	0	0	0	0	0	0
04:15 PM	0	0	0	0	0	0	0	0	0	0	0	0	0	0	0	0	0	0	0	0	0
04:30 PM	0	0	0	0	0	0	0	0	0	0	0	0	0	0	0	0	0	0	0	0	0
04:45 PM	0	0	0	0	0	0	0	0	0	0	0	0	0	0	0	0	0	0	0	0	0
Total	0	0	0	0	0	0	0	0	0	0	0	0	0	0	0	0	0	0	0	0	0
05:00 PM	0	0	0	0	0	0	0	0	0	0	0	0	0	0	0	0	0	0	0	0	0
05:15 PM	0	0	0	0	0	0	0	0	0	0	0	0	0	0	0	0	0	0	0	0	0
05:30 PM	0	0	0	0	0	0	0	0	0	0	0	0	0	0	0	0	0	0	0	0	0
05:45 PM	0	0	0	0	0	0	0	0	0	0	0	0	0	0	0	0	0	0	0	0	0
Total	0	0	0	0	0	0	0	0	0	0	0	0	0	0	0	0	0	0	0	0	0
Grand Total	2	2	0	0	4	0	0	0	0	0	0	0	16	0	16	16	0	0	0	16	36
Apprch %	50	50	0	0		0	0	0	0		0	0	100	0		100	0	0	0		
Total %	5.6	5.6	0	0	11.1	0	0	0	0	0	0	0	44.4	0	44.4	44.4	0	0	0	44.4	

	ROGERS AVE Southbound				Westbound				ROGERS AVE Northbound				RECOLOGY DW Eastbound				
Start Time	Right	Thru	Left	App. Total	Right	Thru	Left	App. Total	Right	Thru	Left	App. Total	Right	Thru	Left	App. Total	Int. Total
Peak Hour Analysis From 04:00 AM to 05:45 PM - Peak 1 of 1																	
Peak Hour for Entire Intersection Begins at 05:15 AM																	
05:15 AM	0	**1**	0	**1**	0	0	0	0	0	0	**1**	**1**	0	0	0	0	2
05:30 AM	**1**	0	0	1	0	0	0	0	0	0	1	1	**2**	0	0	**2**	**4**
05:45 AM	0	0	0	0	0	0	0	0	0	0	0	0	0	0	0	0	0
06:00 AM	0	0	0	0	0	0	0	0	0	0	1	1	1	0	0	1	2
Total Volume	1	1	0	2	0	0	0	0	0	0	3	3	3	0	0	3	8
% App. Total	50	50	0		0	0	0		0	0	100		100	0	0		
PHF	.250	.250	.000	.500	.000	.000	.000	.000	.000	.000	.750	.750	.375	.000	.000	.375	.500

Traffic Data Service

San Jose, CA
(408) 622-4787
tdsbay@cs.com

File Name : Recology 3-28-18 FINAL
Site Code : 00000002
Start Date : 3/28/2018
Page No : 3

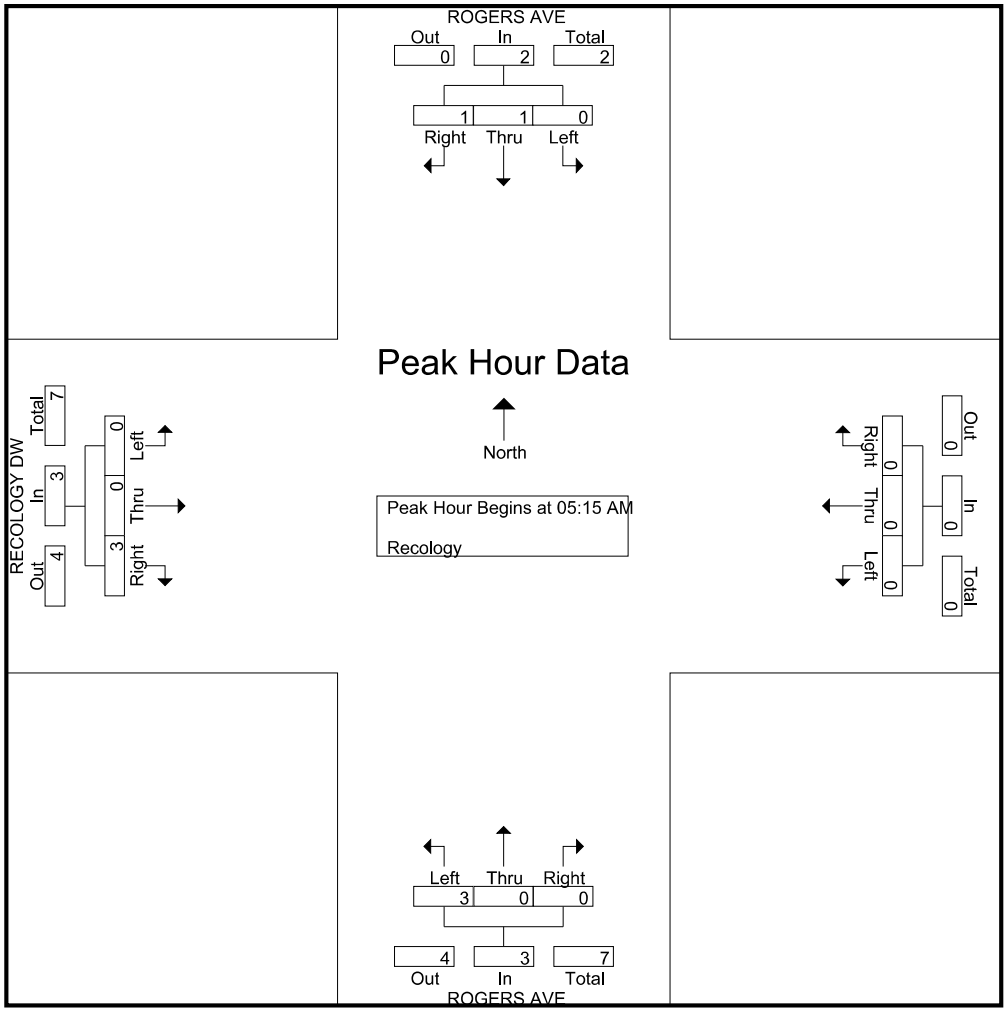

ATTACHMENT B: OFFICE TRIP RATE COMPARISON

Table: Trip Generation Comparison

Land Use	Size	AM Peak Hour			PM Peak Hour		
		Inbound	Outbound	Total	Inbound	Outbound	Total
Office (Employees) for Recology Analysis	37	37	0	37	0	37	37
Office (Employees) Using ITE Average Rates	37	12	2	14	3	12	15

Note: The following rates were used for ITE Land Use 710 (General Urban/Suburban from the *Trip Generation Manual 10th Edition*) General Office Peak Hour of Adjacent Street Traffic:

AM Peak Hour: T = 0.37 * X (83% inbound and 17% outbound)

PM Peak Hour: T = 0.40 * X (20% inbound and 80% outbound)

ATTACHMENT C: PROJECT SITE PLAN

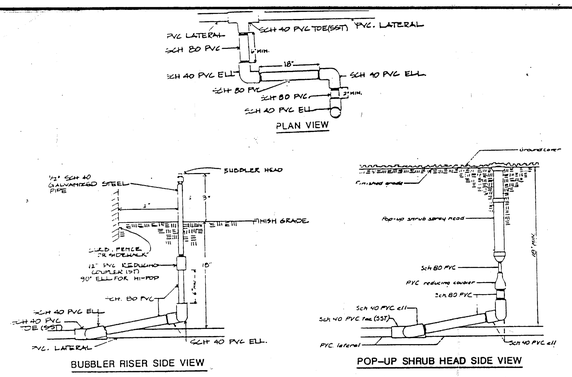

BUBBLER RISER AND POP-UP SHRUB HEAD DETAIL

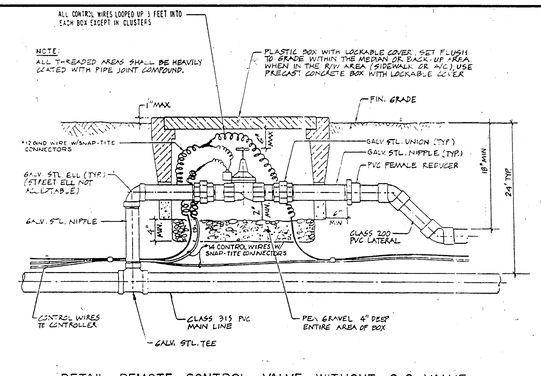

DETAIL - REMOTE CONTROL VALVE WITHOUT Q.C. VALVE
(FOR MEDIANS AND BACK UPS ONLY)

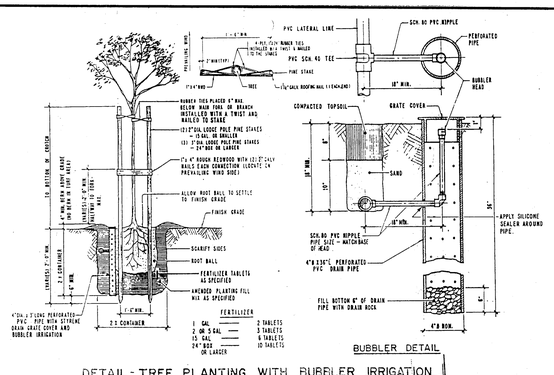

BUBBLER DETAIL

DETAIL - TREE PLANTING WITH BUBBLER IRRIGATION
NOT TO SCALE

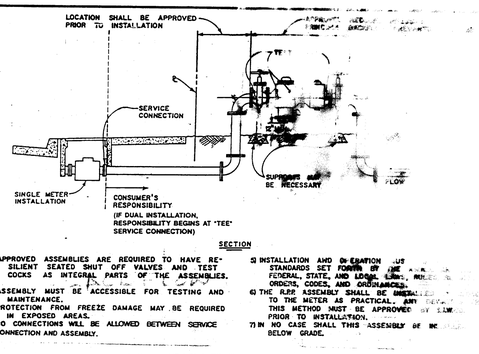

SECTION

1) APPROVED ASSEMBLIES ARE REQUIRED TO HAVE RESILIENT SEATED SHUT OFF VALVES AND TEST COCKS AS INTEGRAL PARTS OF THE ASSEMBLIES.
2) ASSEMBLY MUST BE ACCESSIBLE FOR TESTING AND MAINTENANCE.
3) PROTECTION FROM FREEZE DAMAGE MAY BE REQUIRED IN EXPOSED AREAS.
4) NO CONNECTIONS WILL BE ALLOWED BETWEEN SERVICE CONNECTION AND ASSEMBLY.
5) INSTALLATION AND OPERATION MUST STANDARDS SET FORTH BY THE FEDERAL, STATE, AND LOCAL LAWS, RULES, ORDERS, CODES, AND ORDINANCES.
6) THE R.P.P. ASSEMBLY SHALL BE INSTALLED TO THE METER AS PRACTICAL. ANY DEVIATION FROM THIS METHOD MUST BE APPROVED BY S.J.W. PRIOR TO INSTALLATION.
7) IN NO CASE SHALL THIS ASSEMBLY BE INSTALLED BELOW GRADE.

2 BACKFLOW PREVENTER ASSEMBLY

PER CITY OF SAN JOSE STANDARD

FOR REFERENCE ONLY

NOT TO SCALE

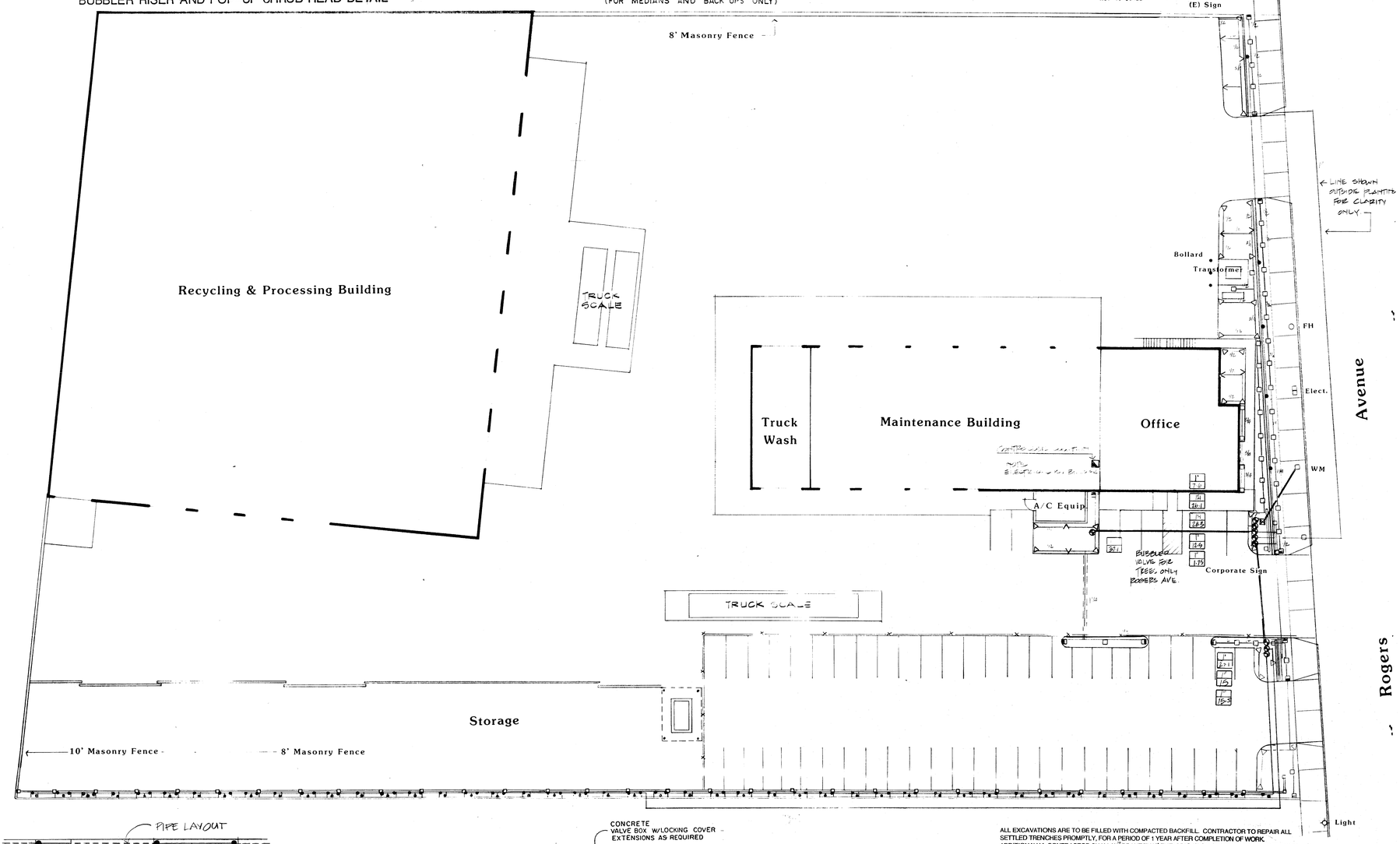

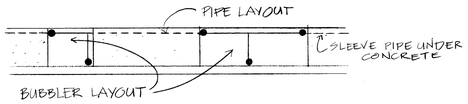

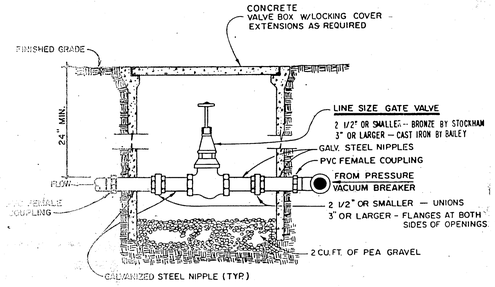

GATE VALVE
NO SCALE

THE LANDSCAPE CONTRACTOR SHALL REVIEW RELATED DRAWINGS AND SHALL ENSURE COORDINATION WITH ALL APPLICABLE TRADES PRIOR TO SUBMITTING BID.

IRRIGATION SYSTEM SHALL BE INSTALLED IN CONFORMANCE WITH ALL APPLICABLE STATE AND LOCAL CODES AND ORDINANCES, BY LICENSED CONTRACTORS AND EXPERIENCED WORKMEN. CONTRACTOR SHALL OBTAIN AND PAY FOR ALL REQUIRED PERMITS AND FEES RELATING TO HIS WORK.

CONTRACTOR TO VERIFY THE LOCATION OF EXISTING UNDERGROUND UTILITIES AND STRUCTURES PRIOR TO THE EXCAVATION OF TRENCHES. CONTRACTOR IS TO REPAIR ANY DAMAGE CAUSED BY HIS WORK AT NO ADDITIONAL COST TO THE OWNER.

IT IS THE RESPONSIBILITY OF THE IRRIGATION CONTRACTOR TO FAMILIARIZE HIMSELF WITH ALL SITE CONDITIONS. HE SHALL COORDINATE HIS WORK WITH THE GENERAL CONTRACTOR AND OTHER SUBCONTRACTORS FOR THE LOCATION AND THE INSTALLATION OF PIPE SLEEVES THROUGH WALLS, UNDER ROADWAYS, PAVING, STRUCTURES, ETC. THE LANDSCAPE CONTRACTOR SHALL NOT INSTALL THE SPRINKLER SYSTEM AS SHOWN ON THE DRAWINGS WHEN IT IS OBVIOUS IN THE FIELD THAT OBSTRUCTIONS, GRADE DIFFERENCES, OR DIFFERENCES IN THE AREA DIMENSIONS EXIST THAT MIGHT NOT HAVE BEEN CONSIDERED IN THE ENGINEERING. SUCH OBSTRUCTIONS OR DIFFERENCES SHOULD BE BROUGHT TO THE ATTENTION OF THE OWNER'S AUTHORIZED REPRESENTATIVE. IN THE EVENT THAT THIS NOTIFICATION IS NOT PERFORMED, THE IRRIGATION CONTRACTOR SHALL ASSUME FULL RESPONSIBILITY FOR ANY REVISIONS NECESSARY.

TRENCHING IS TO PROVIDE 24" OF COVER OVER LINES INSTALLED UNDER PAVED AREAS, 18" OF COVER OVER MAIN LINES AND CONTROL WIRE, AND 12" OF COVER OVER LATERAL LINES. ALL PIPING UNDER PAVEMENT SHALL BE SLEEVED.

THIS DESIGN IS DIAGRAMMATIC. ALL PIPING, VALVES, ETC. SHOWN WITHIN PAVED AREAS IS FOR DESIGN CLARIFICATION ONLY AND SHALL BE INSTALLED IN PLANTING AREAS. AVOID ANY CONFLICTS BETWEEN THE SPRINKLER SYSTEM, PLANTING AND ARCHITECTURAL FEATURES. PARALLEL PIPES MAY BE INSTALLED IN A COMMON TRENCH. PIPES ARE NOT TO BE INSTALLED DIRECTLY ABOVE ONE ANOTHER.

DUE TO THE SCALE OF THE DRAWINGS, IT IS NOT POSSIBLE TO INDICATE ALL OFFSETS, FITTINGS, SLEEVES, ETC. WHICH MAY BE REQUIRED. THE CONTRACTOR SHALL CAREFULLY INVESTIGATE THE STRUCTURAL AND FINISHED CONDITIONS AFFECTING ALL OF HIS WORK AND PLAN HIS WORK ACCORDINGLY, FURNISHING SUCH FITTINGS, ETC., AS MAY BE REQUIRED TO MEET SUCH CONDITIONS. DRAWINGS ARE GENERALLY DIAGRAMMATIC AND INDICATIVE OF THE WORK TO BE INSTALLED.

THE OWNER'S ELECTRICAL CONTRACTOR TO SUPPLY 120 VOLT A.C. (2.5 AMP) SERVICE TO CONTROLLER LOCATION. IRRIGATION CONTRACTOR TO MAKE FINAL CONNECTION FROM ELECTRICAL STUBOUT TO CONTROLLER. IRRIGATION CONTROL WIRE SHALL BE #14, U.L. APPROVED FOR DIRECT BURIAL. COMMON WIRE SHALL BE WHITE IN COLOR; WIRING TO INDIVIDUAL REMOTE CONTROL VALVES SHALL BE RED OR BLACK IN COLOR.

EACH CONTROLLER TO HAVE ITS OWN INDEPENDENT GROUND WIRE. INSTALL A SPARE CONTROL WIRE OF A DIFFERENT COLOR ALONG THE ENTIRE MAIN LINE. LOOP 36" EXCESS WIRE INTO EACH SINGLE VALVE BOX AND INTO ONE VALVE BOX IN EACH GROUP OF VALVES.

SPLICING OF 24 VOLT WIRES WILL NOT BE PERMITTED EXCEPT IN VALVE BOXES. LEAVE A 24" COIL OF EXCESS WIRE AT EACH SPLICE AND 100 FEET ON CENTER ALONG WIRE RUN. SPLICES ARE TO BE MADE WITH A COPPER CRIMP-TYPE CONNECTOR AND AN APPROVED EPOXY SPLICE PACK. TAPE WIRE IN BUNDLES 10 FEET ON CENTER. NO TAPING PERMITTED INSIDE SLEEVES.

VALVE LOCATIONS SHOWN ARE DIAGRAMMATIC. INSTALL IN SHRUB AREAS WHERE POSSIBLE.

THE IRRIGATION CONTRACTOR SHALL FLUSH AND ADJUST ALL SPRINKLER HEADS FOR OPTIMUM PERFORMANCE AND TO PREVENT POSSIBLE OVERSPRAY ONTO WALKS, ROADWAYS AND/OR BUILDINGS AS MUCH AS POSSIBLE. THIS SHALL INCLUDE SELECTING THE BEST DEGREE OF ARC TO FIT THE EXISTING SITE CONDITIONS AND TO THROTTLE THE FLOW CONTROL OF EACH VALVE TO OBTAIN THE OPTIMUM OPERATING PRESSURE FOR EACH SYSTEM. ALL MAIN LINES SHALL BE FLUSHED PRIOR TO THE INSTALLATION OF IRRIGATION HEADS. AT 30 DAYS AFTER INSTALLATION EACH SYSTEM SHALL BE FLUSHED TO ELIMINATE GLUE AND DIRT PARTICLES FROM THE LINES.

ALL SPRINKLER HEADS SHALL BE SET PERPENDICULAR TO FINISH GRADE OF THE AREAS TO BE IRRIGATED. HEADS SHALL BE INSTALLED 6-8" FROM BUILDING WALLS, OR WITHIN 2" OF PAVEMENT, CURBS, OR HEADER EDGES.

SPRINKLERS WHERE LOW HEAD DRAINAGE OCCURS SHALL USE A CHECK VALVE.

ALL EXCAVATIONS ARE TO BE FILLED WITH COMPACTED BACKFILL. CONTRACTOR TO REPAIR ALL SETTLED TRENCHES PROMPTLY, FOR A PERIOD OF 1 YEAR AFTER COMPLETION OF WORK. ADDITIONALLY, CONTRACTOR SHALL WARRANT THAT THE IRRIGATION SYSTEM WILL BE FREE FROM DEFECTS IN MATERIALS AND WORKMANSHIP FOR A PERIOD OF 1 YEAR AFTER FINAL ACCEPTANCE OF WORK.

FOR MAIN LINE PIPING INSIDE SLEEVES USE 1120-315 PSI PVC PLASTIC PIPE WITH SCHEDULE 40 COUPLINGS.

INSTALL VALVE BOXES PERPENDICULAR TO WALK, CURB, LAWN, BUILDING OR LANDSCAPE FEATURES. AT MULTIPLE VALVE BOX GROUPS, EACH BOX SHALL BE AN EQUAL DISTANCE FROM THE WALK, CURB, LAWN, ETC. SHORT SIDE OF VALVE BOX SHALL BE PARALLEL TO WALK, CURB, LAWN, ETC. ALIGN VALVE BOXES WITH ADJACENT PAVEMENT EDGES OR BUILDING FOR A NEAT APPEARANCE. VALVE BOXES TO CONFORM WITH FINISH GRADES. ALL VALVES TO BE SET ON 12" OF DRAIN GRAVEL.

THE SPRINKLER SYSTEM DESIGN IS BASED ON THE OPERATING PRESSURE SHOWN ON THE IRRIGATION DRAWINGS. THE IRRIGATION CONTRACTOR SHALL VERIFY WATER PRESSURE PRIOR TO ANY CONSTRUCTION. REPORT ANY DIFFERENCE BETWEEN THE WATER PRESSURE INDICATED ON THE DRAWINGS AND THE ACTUAL PRESSURE READING AT THE IRRIGATION POINT OF CONNECTION TO THE OWNER'S AUTHORIZED REPRESENTATIVE IMMEDIATELY.

IRRIGATION CONTRACTOR TO NOTIFY ALL LOCAL JURISDICTIONS FOR INSPECTION AND TESTING OF INSTALLED BACKFLOW PREVENTION DEVICES.

NOTE: LANDSCAPE CONTRACTOR SHALL VERIFY MINIMUM PRESSURE OF 48 PSI AND MINIMUM OUTPUT OF 60 GPM AT POINT OF CONNECTION PRIOR TO THE START OF ANY WORK. REPORT ANY DISCREPANCIES IMMEDIATELY TO THE LANDSCAPE ARCHITECT.

SYMBOL	DESCRIPTION	MFG./MODEL	RAD	GPM	PSI
▽	6" SHRUB POP-UP HALF HEAD	RAINBIRD 1800-10H-LA	10'	0.79	30
▽	6" SHRUB POP-UP QUARTER HEAD	RAINBIRD 1800-10T-LA	10'	0.52	30
□	6" SHRUB POP-UP CENTER STRIP	RAINBIRD 1800-15-CST		0.61	30
◓	6" SHRUB POP-UP END STRIP	RAINBIRD 1806-15-EST		1.21	30
●	BUBBLER	RAINBIRD 1401		0.25	30
⧗	REDUCED PRESSURE BACKFLOW PREVENTER ASSEMBLY	FEBCO 825Y 1"			
▭	METER 1"	BY OTHERS			
◉	REMOTE CONTROL VALVE	RAINBIRD 100-PEB			
◪	AUTOMATIC CONTROLLER	IRRITROL MC-12 PLUS	WALL MOUNT IN MAINTENANCE BLDG		
——	PRESSURE MAINLINE	MIN. SCH. 40 PVC PIPE MIN. 18" COVER	SEE PLAN FOR SIZE		
——	LATERAL LINE	MIN. SCH. CLASS 200 PVC MIN. 12" COVER	FOR LINE SIZES 3/4" AND LARGER		
= = =	SLEEVE	4" PVC			
▭	VALVE SIZE GALLONS PER MINUTE				

Rose Associates, Inc.
Landscape Architecture
1657 N. Main Blvd Suite 200
Walnut Creek, California
(510) 944-1112

AS BUILT

Irrigation Plan

Western Waste Industries
San Jose Recycling Plus Project
1675 Rogers Avenue
San Jose, California

Date	1/6/93
Scale	1" 20' 0"
Drawn	Don
Job	9-265
Sheet	L-2
Of	2 Sheets

30 X 42 PRINTED ON NO. 1000H CLEARPRINT

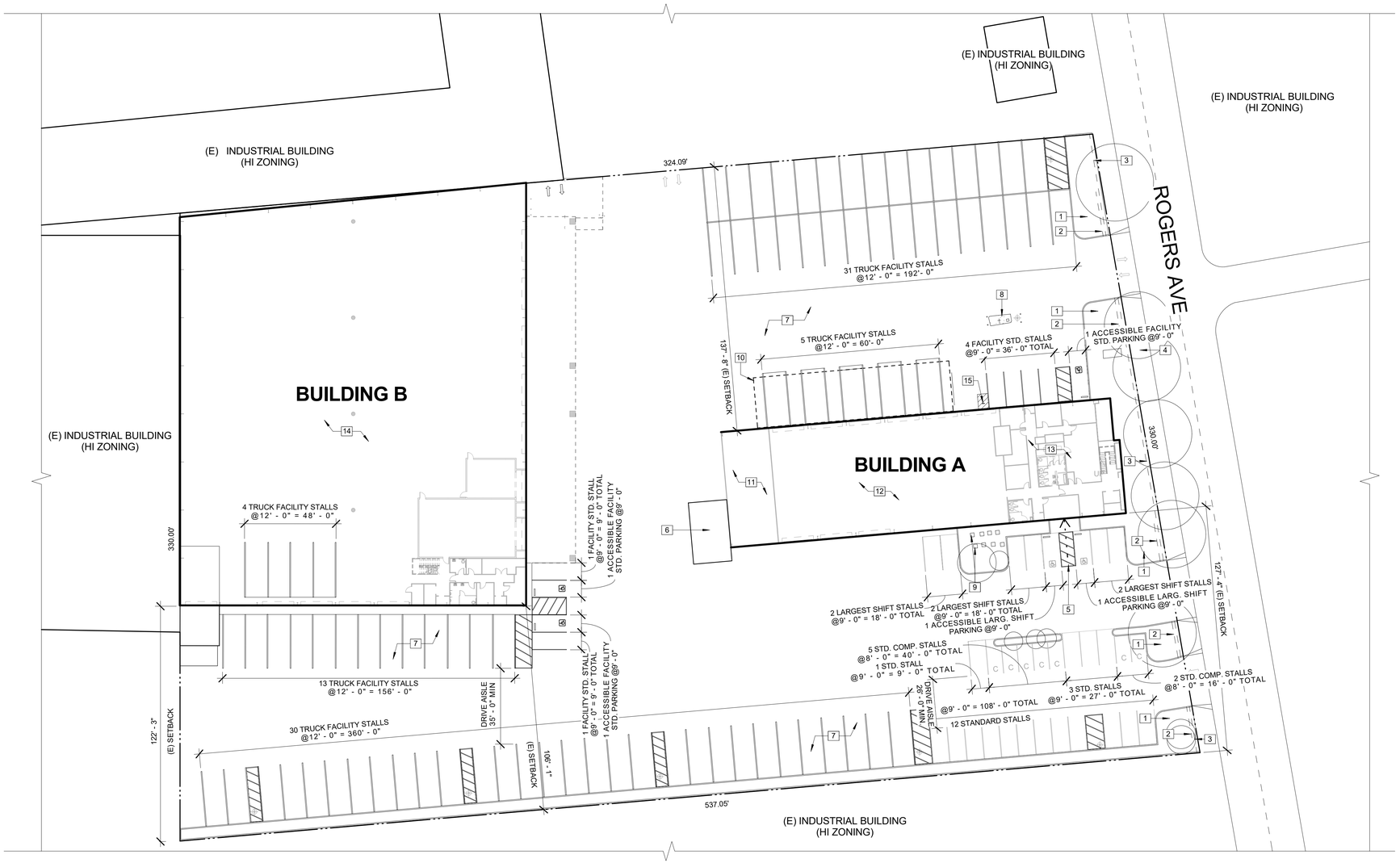

PROPOSED SITE PLAN 1

1" = 30'-0"

TABULATIONS

REQUIRED PARKING

CITY OF SAN JOSE ZONING:
TABLE 20-190

OFFICE (STANDARD) 6,480 SF	(1 SPACE /250 SF) [.85*(6480/250)] = 2 ACCESSIBLE =	 23 STALLS 2 STALLS
BICYCLE	(1 SPACE /4000 SF) = [6480/4000] =	 2 STALLS

TRANSFER FACILITY
(1 PER FACILITY VEHICLE, 1 PER EMPLOYEE OF THE LARGEST SHIFT)

FACILITY VEHICLE:	83 TRUCKS = 9 STANDARD = 1 ACCESSIBLE =	83 STALLS 9 STALLS 1 STALL
EMPLOYEE OF THE LARGEST SHIFT:	8 LARGEST SHIFT = 2 ACCESSIBLE =	8 STALLS 2 STALLS

BICYCLE
(1 PER 10 FULL TIME EMPLOYEE)
8 FULL TIME EMPLOYEE = 1 STALL

COMPACT PARKING REQUIRED
(NO MORE THAN 25% OF REQUIRED SPACES SHALL BE COMPACT)
[(40x25)/100] = 10 STALLS

COMPACT PARKING PROVIDED 7 STALLS

ACCISSEBLE PARKING REQUIRED 5 STALLS
ACCESSIBLE PARKING PROVIDED 5 STALLS

BICYCLE PARKING REQUIRED 3 STALLS
BICYCLE PARKING PROVIDED 3 STALLS

TOTAL REQUIRED PARKING: 123 STALLS

TOTAL EXISTING PARKING: 123 STALLS
TOTAL PROVIDED PARKING: 123 STALLS

KEY NOTES

1	(E) LANDSCAPE TO REMAIN
2	(E) METAL ROLLING GATE
3	(E) METAL FENCE TO REMAIN
4	(E) FIRE HYDRANT
5	(E) ACCESSIBLE PARKING
6	(E) PAINT BOOTH TO REMAIN
7	(E) AC PARKING TO BE RESTRIPED
8	(E) FUEL ISLAND
9	(E) HVAC UNITS
10	(E) CANOPY
11	(E) TRUCK WASH (NO WORK HERE)
12	(E) MAINTENANCE SHOP (NO WORK HERE)
13	(E) OFFICE (NO WORK HERE)
14	(E) S-2 TRANSFER STATION (NO WORK HERE)
15	(N) BICYCLE PARKING

EATON **HALL** ARCHITECTURE

1501 The Alameda, Ste 105
San Jose, CA 95126

TEL 408.265.5255
FAX 408.265.6155

A CALIFORNIA CORPORATION

SUP APPLICATION

1675 ROGERS AVE, SAN JOSE, CA 95112

CLIENT:
RECOLOGY

Rev. #	Description	Date

Project Number: 16.091
Date: 04/25/2018
Drawn by: EE
Checked by: JE

Sheet Title:

PROPOSED SITE PLAN

2

4/25/2018 10:43:07 AM

© 2015 Eaton Hall Architecture, Inc.

ATTACHMENT D: RECOLOGY TRUCK TYPES

Figure 3. Photograph of Typical Collection Vehicle

Figure 4. Photograph of Typical Transfer Trailer

ATTACHMENT D: TRUCK TURNING TEMPLATES

FEHR & PEERS
160 W. Santa Clara Street
Suite 675
San Jose, CA 95113
(408) 278-1700

RECOLOGY SILICON VALLEY
COLLECTION TRUCK EXHIBIT
LEFT IN / LEFT OUT

◇	REVISIONS	DESIGN BY	DESIGN DATE	CITY APPR.	APPR. DATE

DEPARTMENT OF PUBLIC WORKS
SAN JOSE, CALIFORNIA

CITY OF SAN JOSE
CAPITAL OF SILICON VALLEY

APPROVED BY BARRY NG
DIRECTOR OF PUBLIC WORKS

SHEET 1 OF 4

Sep 13, 2018 CADD FILE: \\fpainc.local\Dfs-ent-data\San Jose N Drive\Projects_SJ18_Projects\SJ18_1803_Recology_Silicon_Valley\Graphics\CAD\Archive\1803_AT_Exhibit.dwg

Fehr & Peers Associates, its employees, its officers or agents shall not be responsible for the accuracy or completeness of electronic copies of this plan sheet.

FEHR & PEERS
160 W. Santa Clara Street
Suite 675
San Jose, CA 95113
(408) 278-1700

RECOLOGY SILICON VALLEY
COLLECTION TRUCK EXHIBIT
RIGHT IN / RIGHT OUT

	REVISIONS	DESIGN BY	DESIGN DATE	CITY APPR.	APPR. DATE

DEPARTMENT OF PUBLIC WORKS
SAN JOSE, CALIFORNIA

CITY OF SAN JOSE
CAPITAL OF SILICON VALLEY

APPROVED BY BARRY NG
DIRECTOR OF PUBLIC WORKS

SHEET 2 OF 4

CADD FILE: \\fpinc.local\Drs-ent-data\San Jose N Drive\Projects_SJ18_Projects\SJ18_1803_Recology_Silicon_Valley\Graphics\CAD\Archive\1803_AT_Exhibit.dwg
Sep 13, 2018

Fehr & Peers Associates, its employees, its officers or agents shall not be responsible for the accuracy or completeness of electronic copies of this plan sheet.

FEHR & PEERS
160 W. Santa Clara Street
Suite 675
San Jose, CA 95113
(408) 278-1700

RECOLOGY SILICON VALLEY
TRANSFER TRAILER TRUCK EXHIBIT
RIGHT IN / RIGHT OUT

	REVISIONS	DESIGN BY	DESIGN DATE	CITY APPR.	APPR. DATE

DEPARTMENT OF PUBLIC WORKS
SAN JOSE, CALIFORNIA

CITY OF SAN JOSE
CAPITAL OF SILICON VALLEY

APPROVED BY BARRY NG
DIRECTOR OF PUBLIC WORKS

SHEET 3 OF 4

CADD FILE: \\fpinc.local\Drs-ent-data\San Jose N Drive\Projects_SJ18_Projects\SJ18_1803_Recology_Silicon_Valley\Graphics\CAD\Archive\1803_AT_Exhibit.dwg
Sep 13, 2018

Fehr & Peers Associates, its employees, its officers or agents shall not be responsible for the accuracy or completeness of electronic copies of this plan sheet.

FEHR & PEERS
160 W. Santa Clara Street
Suite 675
San Jose, CA 95113
(408) 278-1700

RECOLOGY SILICON VALLEY
TRANSFER TRAILER TRUCK EXHIBIT
LEFT IN / LEFT OUT

	REVISIONS	DESIGN BY	DESIGN DATE	CITY APPR.	APPR. DATE

DEPARTMENT OF PUBLIC WORKS
SAN JOSE, CALIFORNIA

CITY OF SAN JOSE
CAPITAL OF SILICON VALLEY

APPROVED BY BARRY NG
DIRECTOR OF PUBLIC WORKS

SHEET 4 OF 4

CADD FILE: \\fpinc.local\Drs-ent-data\San Jose N Drive\Projects_SJ18_Projects\SJ18_1803_Recology_Silicon_Valley\Graphics\CAD\Archive\1803_AT_Exhibit.dwg

Sep 13, 2018

Fehr & Peers Associates, its employees, its officers or agents shall not be responsible for the accuracy or completeness of electronic copies of this plan sheet.

ATTACHMENT F: ROGERS AVENUE SIGNING AND STRIPING PLAN

STRIPING NOTES:

1. ALL STRIPING AND MARKING INSTALLATION TO BE PERFORMED BY THE CONTRACTOR.
2. ALL STRIPING AND MARKING REMOVAL TO BE PERFORMED BY THE CONTRACTOR PER THE CITY OF SAN JOSE STANDARD SPECIFICATIONS. ALL STRIPING AND MARKINGS THAT ARE IN CONFLICT WITH THE NEW INSTALLATION MUST BE REMOVED BY THE CONTRACTOR.
3. ALL PAVEMENT MARKING AND STRIPING LAYOUT (CAT-TRACKING) SHALL BE DONE BY THE CONTRACTOR PRIOR TO PLACEMENT.
4. PROJECT INSPECTOR SHALL NOTIFY THE DEPARTMENT OF TRANSPORTATION (GEOMETRIC DESIGN) AT (408)535-3850 A MINIMUM OF TWO WEEKS PRIOR TO THE NEED TO ARRANGE FOR THE STRIPING AND SIGNING.
5. UNLESS INDICATED OTHERWISE, ALL SIGN TYPES SHOWN ON THIS PLAN ARE PER THE 2014 CALIFORNIA MUTCD.
6. THE WIDTH OF THE CROSSWALK PER PLAN SHALL BE MEASURED FROM THE CENTER OF THE STRIPING ON ONE SIDE TO THE CENTER OF THE STRIPING ON THE OTHER SIDE.
7. NUMBER ONE LANE DIMENSIONS SHOWN ARE MEASURED FROM MEDIAN FACE OF CURB.

LEGEND:

- INSTALLATION OF PROPOSED SIGN ON EXISTING LIGHTING, SIGNAL OR SIGN POLE BY STRAP AND SADDLE BRACKET METHOD
- INSTALLATION OF PROPOSED SIGN WITH NEW 2" STEEL SIGN POLE
- PROPOSED / EXISTING SIGN ON EXISTING POLE
- INSTALLATION OF PROPOSED SIGN ON EXISTING POLE
- REMOVE EXISTING SIGN ON EXISTING POLE
- REMOVE EXISTING SIGN AND POLE
- EXISTING SIGN TO REMAIN
- INSTALL 4'X6' TYPE D BIKE LOOP
- INSTALL 6'X6' TYPE D LOOP DETECTOR
- INSTALL 6'X20' TYPE C LOOP DETECTOR
- INSTALL 6'X6' TYPE Q LOOP DETECTOR
- (18) CITY STRIPING AND MARKING DETAILS (SEE LOWER LEFT-HAND CORNER FOR EQUIVALENT STANDARD CALTRANS STRIPING AND MARKING DETAILS)
- TYPE F DELINEATOR @ 48" O.C.
- ZEBRA 13 @ 12' O.C. AFTER 48" FROM THE START OF THE BIKE LANE
- DIRECTION OF TRAVEL
- TYPE G MARKER

ABBREVIATIONS:

BL	BIKE LANE ARROW AND BIKE WITH PERSON SYMBOL
SR	SHARED LANE MARKING (SHARROW)
LTA	TYPE IV ARROW (LEFT)
RTA	TYPE IV ARROW (RIGHT)
L/TA	TYPE VII ARROW (LEFT AND THROUGH)
R/TA	TYPE VII ARROW (RIGHT AND THROUGH)
LMA	TYPE VI ARROW (LEFT MERGE LANE)
RR	RAILROAD CROSSING SYMBOL
NTS	NOT TO SCALE
O.C.	ON CENTER

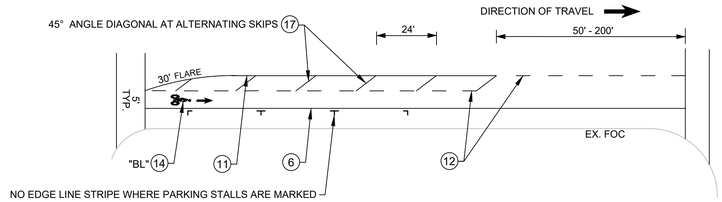

DETAIL A
BUFFERED BIKE LANE AT UNSIGNALIZED INTERSECTIONS W/ PARKING
NTS

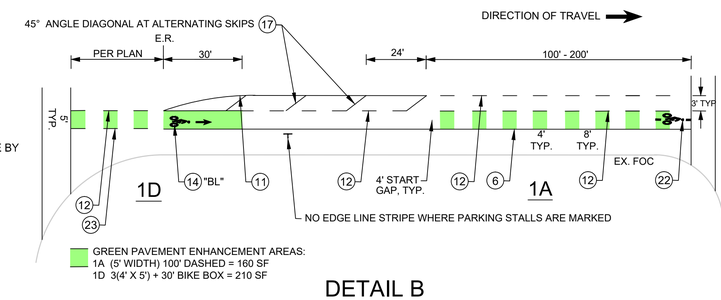

DETAIL B
BUFFERED BIKE LANE AT SIGNALIZED INTERSECTIONS W/ PARKING
NTS

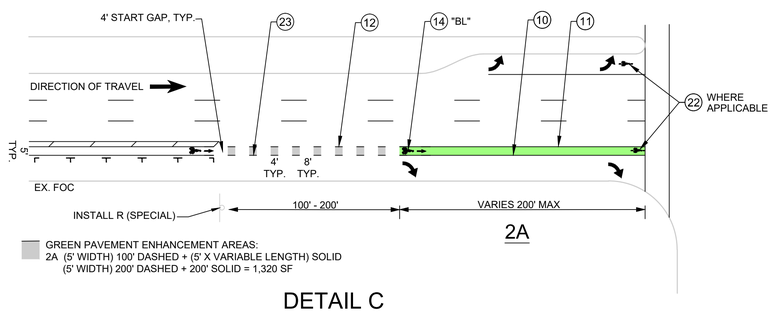

DETAIL C
INTERSECTIONS W/ RIGHT TURN BAY
NTS

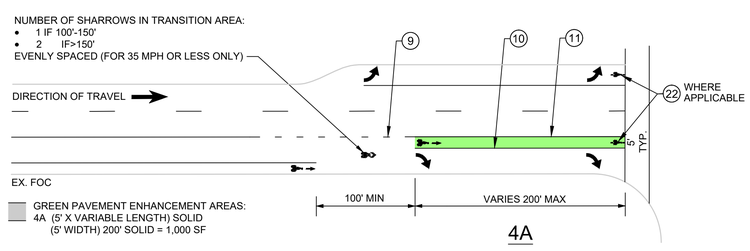

DETAIL D
INTERSECTIONS W/ DROP LANE/RIGHT TURN BAY
NTS

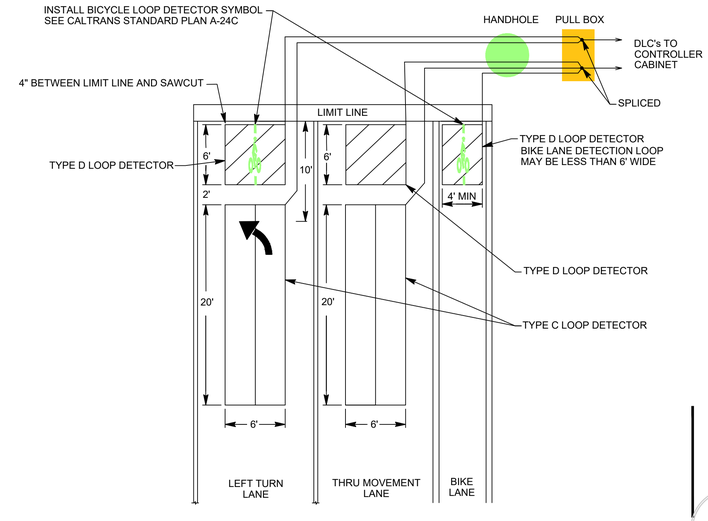

1. IF DETECTOR LOOP CABLES ARE IN ACCEPTABLE CONDITION, THEY MAY BE REUSED. IF NOT, THEY SHALL BE REPLACED.
2. REFER TO CALTRANS STANDARD PLAN ES-5B FOR DETECTION LOOP SAWCUT AND WINDING DETAILS.
3. LOOPS SHALL BE CENTERED IN LANES EXCEPT FOR CURB LANES GREATER THAN 12 FEET WHERE THEY SHALL BE INSTALLED 3 FEET FROM THE LANE, UNLESS SPECIFIED OTHERWISE ON THE PLANS.
4. SEE CSJ STANDARD DETAILS E-71 AND E-72, AND CSJ STANDARD SPECIFICATION 86-5 FOR OTHER REQUIREMENTS.
5. ALL WORK SHALL BE COORDINATED WITH CSJ DEPARTMENT OF TRANSPORTATION (DOT) ELECTRICAL MAINTENANCE SECTION.

DETAIL E
CSJ VEHICLE DETECTION PAVEMENT LOOP LAYOUT GUIDELINE
NTS

R (SPECIAL)

DETAIL F
SPECIAL BICYCLE SIGNS
NTS

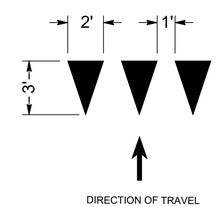

DETAIL G
YIELD LINE
NTS

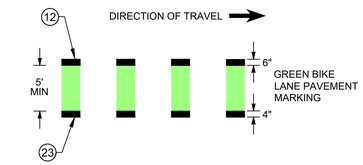

DETAIL H
GREEN BIKE LANE PAVEMENT MARKING (TYP.)
NTS

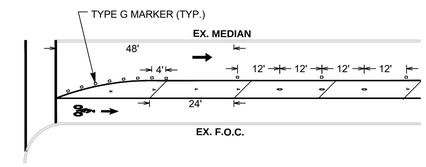

DETAIL I
NTS

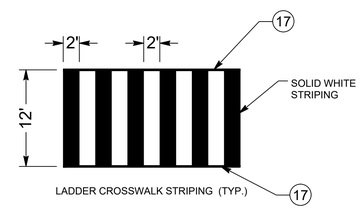

DETAIL J
NTS

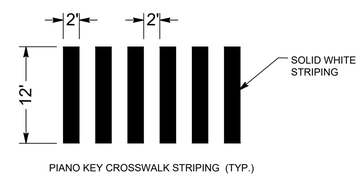

DETAIL K
NTS

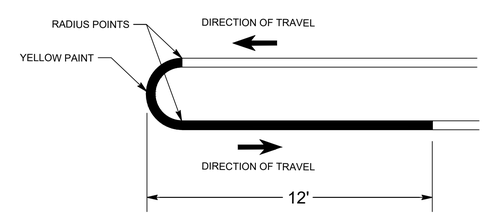

DETAIL L
MEDIAN NOSE PAINT
NTS

STRIPING LEGEND:

1. STATE DETAIL 9 (MODIFIED)	8. STATE DETAIL 32	15. CHATTER BARS	22. BIKE LOOP DETECTOR SYMBOL
2. STATE DETAIL 12 (MODIFIED)	9. STATE DETAIL 37B	16. TYPE "AY" MARKER	23. STATE DETAIL 39A (MODIFIED)
3. STATE DETAIL 22	10. STATE DETAIL 38	17. SOLID 12" WHITE	24. YIELD LINE
4. STATE DETAIL 23	11. STATE DETAIL 39	18. SOLID 12" YELLOW	25. GREEN PAVEMENT ENHANCEMENT
5. STATE DETAIL 25	12. STATE DETAIL 39A	19. SOLID 24" WHITE	26. RESERVED FOR FUTURE USE
6. STATE DETAIL 27B	13. STATE DETAIL 40A	20. STATE DETAIL 26 (MODIFIED)	27. SOLID 24" YELLOW
7. STATE DETAIL 29	14. ARROW / MESSAGES	21. STATE DETAIL 40	28. STATE DETAIL 41

	REVISIONS	DATE
6		
5		
4		
3		
2		
1		

HMH
1570 Oakland Road
San Jose, CA 95131
(408) 487-2200
Land Planning
Landscape Architecture
Civil Engineering
Utility Design
Land Surveying
Stormwater Compliance
www.HMHca.com

REGISTERED PROFESSIONAL ENGINEER — JON CACCIOTTI — No. 82825 — CIVIL — STATE OF CALIFORNIA

NOTES, LEGEND AND BIKE LANE MARKING DETAILS

SIGNING AND STRIPING PLAN

CITY OF SAN JOSE — CAPITAL OF SILICON VALLEY

DEPARTMENT OF TRANSPORTATION
SAN JOSE, CALIFORNIA

DRAWN BY:
CHECKED BY:
PROJ MGR:
DATE: 08-11-17
SCALE: 1" = 40'
SHEET NO. 1 OF 3

JIM ORTBAL
DIRECTOR

FILE NO.

S:\PROJECTS\44540\1\PWP\LOT DRAWINGS\PAKAGE 1\LOCATIONS 1,2,3\44540-TITLE SHEET-FOR-ALL-SEG.DWG

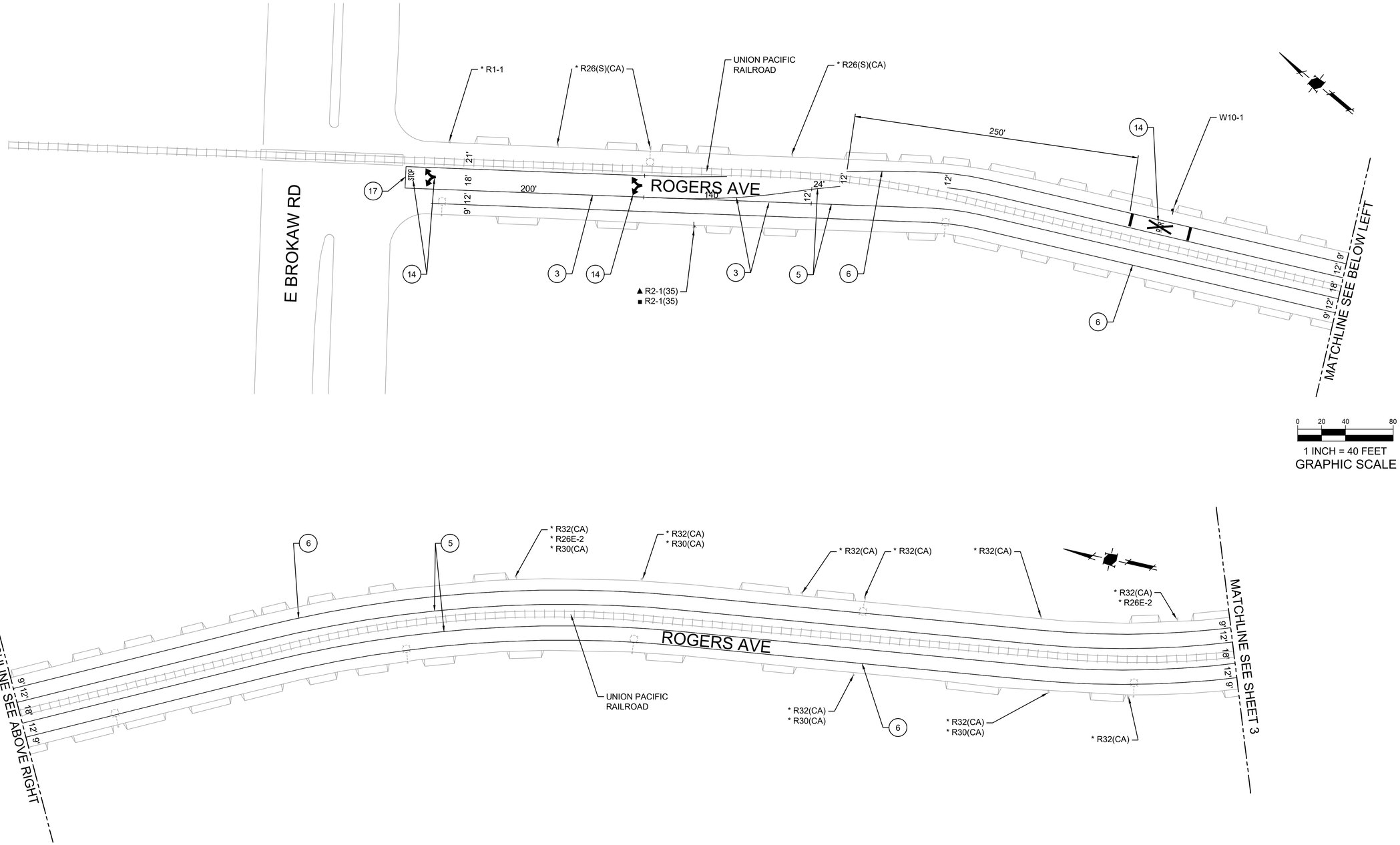

S:\PROJECTS\445401\PW\PLOT DRAWINGS\PAKAGE 2 (LOCATIONS 4,5,6,7,8)\007-ROGERS AVE-IP01.DWG

HMH
1570 Oakland Road
San Jose, CA 95131
(408) 487-2200
Land Planning
Landscape Architecture
Civil Engineering
Utility Design
Land Surveying
Stormwater Compliance
www.HMHca.com

1. STATE DETAIL 9 (MODIFIED)	8. STATE DETAIL 32	15. CHATTER BARS	22. BIKE LOOP DETECTOR SYMBOL
2. STATE DETAIL 12 (MODIFIED)	9. STATE DETAIL 37B	16. TYPE "AY" MARKER	23. STATE DETAIL 39A (MODIFIED)
3. STATE DETAIL 22	10. STATE DETAIL 38	17. SOLID 12" WHITE	24. YIELD LINE
4. STATE DETAIL 23	11. STATE DETAIL 39	18. SOLID 12" YELLOW	25. GREEN PAVEMENT ENHANCEMENT
5. STATE DETAIL 25	12. STATE DETAIL 39A	19. SOLID 24" WHITE	26. RESERVED FOR FUTURE USE
6. STATE DETAIL 27B	13. STATE DETAIL 40A	20. STATE DETAIL 26 (MODIFIED)	27. SOLID 24" YELLOW
7. STATE DETAIL 29	14. ARROW / MESSAGES	21. STATE DETAIL 40	28. STATE DETAIL 41

	REVISIONS	DATE
6		
5		
4		
3		
2		
1		

REGISTERED PROFESSIONAL ENGINEER
JON CACCIOTTI
No. 82825
CIVIL
STATE OF CALIFORNIA

ROGERS AVENUE
E BROKAW ROAD TO QUEENS LANE
SIGNING AND STRIPING PLAN

CITY OF SAN JOSE
CAPITAL OF SILICON VALLEY

DEPARTMENT OF TRANSPORTATION
SAN JOSE, CALIFORNIA

DRAWN BY:
CHECKED BY:
PROJ MGR:
DATE: 08-11-17
SCALE: 1" = 40'
SHEET NO. 2 OF 3

JIM ORTBAL
DIRECTOR

FILE NO.

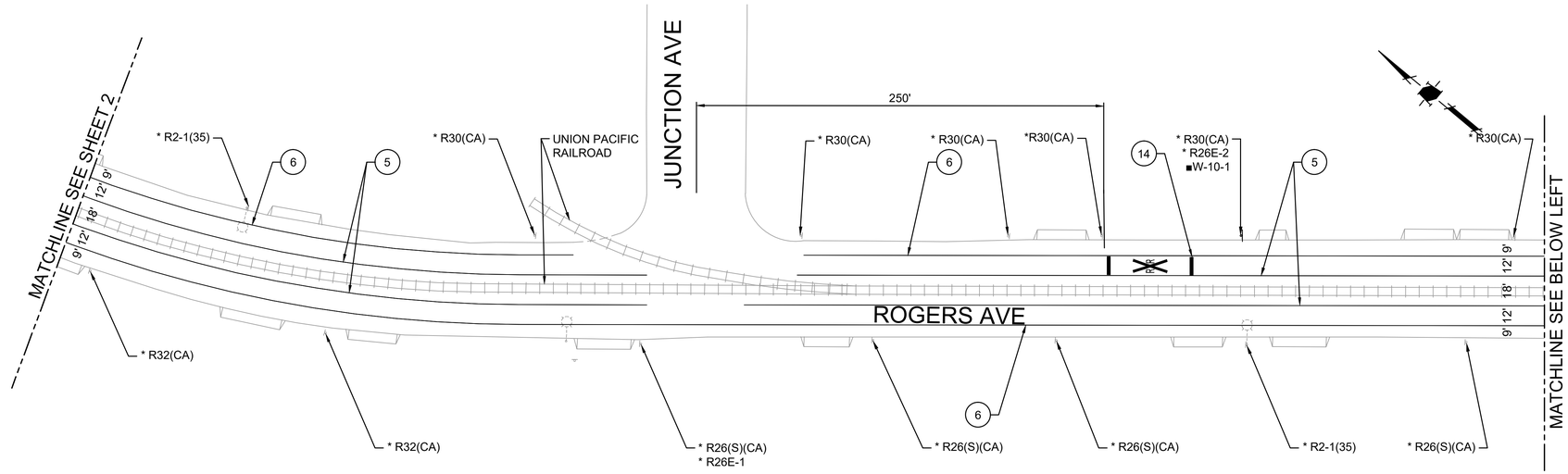

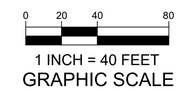

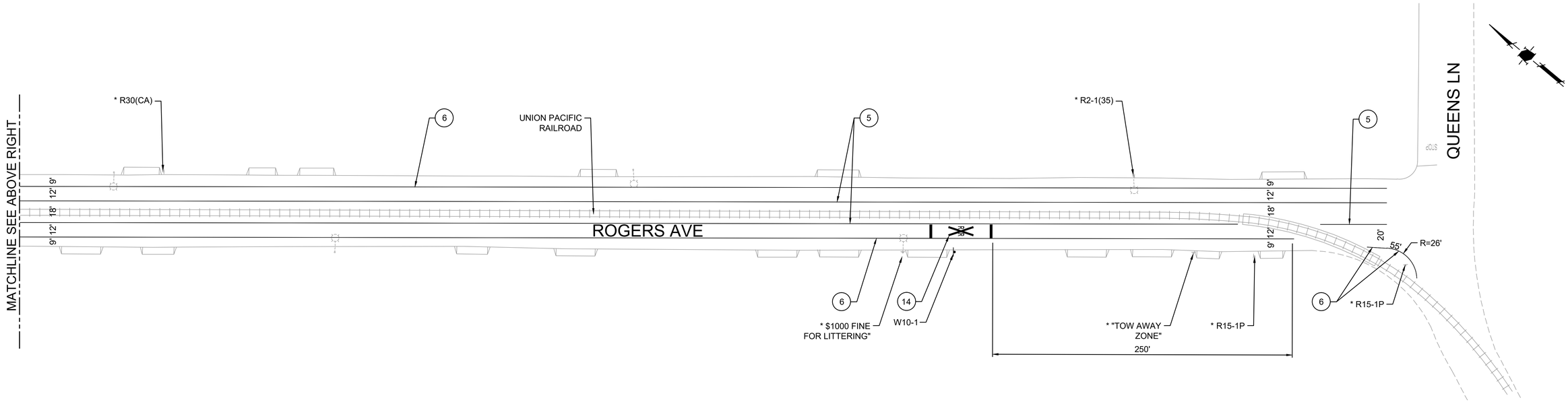

HMH
Land Planning
Landscape Architecture
Civil Engineering
Utility Design
Land Surveying
Stormwater Compliance
1570 Oakland Road
San Jose, CA 95131
(408) 487-2200
www.HMHca.com

1. STATE DETAIL 9 (MODIFIED)	8. STATE DETAIL 32	15. CHATTER BARS	22. BIKE LOOP DETECTOR SYMBOL
2. STATE DETAIL 12 (MODIFIED)	9. STATE DETAIL 37B	16. TYPE "AY" MARKER	23. STATE DETAIL 39A (MODIFIED)
3. STATE DETAIL 22	10. STATE DETAIL 38	17. SOLID 12" WHITE	24. YIELD LINE
4. STATE DETAIL 23	11. STATE DETAIL 39	18. SOLID 12" YELLOW	25. GREEN PAVEMENT ENHANCEMENT
5. STATE DETAIL 25	12. STATE DETAIL 39A	19. SOLID 24" WHITE	26. RESERVED FOR FUTURE USE
6. STATE DETAIL 27B	13. STATE DETAIL 40A	20. STATE DETAIL 26 (MODIFIED)	27. SOLID 24" YELLOW
7. STATE DETAIL 29	14. ARROW / MESSAGES	21. STATE DETAIL 40	28. STATE DETAIL 41

	REVISIONS	DATE
6		
5		
4		
3		
2		
1		

REGISTERED PROFESSIONAL ENGINEER
JON CACCIOTTI
No. 82825
CIVIL
STATE OF CALIFORNIA

ROGERS AVENUE
E BROKAW ROAD TO QUEENS LANE
SIGNING AND STRIPING PLAN

CITY OF SAN JOSE
CAPITAL OF SILICON VALLEY

DEPARTMENT OF TRANSPORTATION
SAN JOSE, CALIFORNIA

DRAWN BY:
CHECKED BY:
PROJ MGR:
DATE: 08-11-17
SCALE: 1" = 40'
SHEET NO. 3 OF 3

JIM ORTBAL
DIRECTOR

FILE NO.

S:\PROJECTS\445401\PW\PLOT DRAWINGS\PAKAGE 2 (LOCATIONS 4,5,6,7,8)\007-ROGERS AVE-IP01.DWG