Draft

SAN JOSÉ-SANTA CLARA REGIONAL WATER FACILITY POND A18 SOUTH GATE LEVEE REPAIR PROJECT

Initial Study / Mitigated Negative Declaration

Prepared for

August 2017

Draft

SAN JOSÉ-SANTA CLARA REGIONAL WATER FACILITY POND A18 SOUTH GATE LEVEE REPAIR PROJECT

Initial Study / Mitigated Negative Declaration

Prepared for

August 2017

180 Grand Avenue
Suite 1050
Oakland, CA 94612
510.839.5066
www.esassoc.com

Bend	Oakland	San Francisco
Camarillo	Orlando	Santa Monica
Delray Beach	Pasadena	Sarasota
Destin	Petaluma	Seattle
Irvine	Portland	Sunrise
Los Angeles	Sacramento	Tampa
Miami	San Diego	

160336

OUR COMMITMENT TO SUSTAINABILITY | ESA helps a variety of public and private sector clients plan and prepare for climate change and emerging regulations that limit GHG emissions. ESA is a registered assessor with the California Climate Action Registry, a Climate Leader, and founding reporter for the Climate Registry. ESA is also a corporate member of the U.S. Green Building Council and the Business Council on Climate Change (BC3). Internally, ESA has adopted a Sustainability Vision and Policy Statement and a plan to reduce waste and energy within our operations. This document was produced using recycled paper.

CITY OF
SAN JOSE
CAPITAL OF SILICON VALLEY

Department of Planning, Building and Code Enforcement

ROSALYNN HUGHEY, INTERIM DIRECTOR

MITIGATED NEGATIVE DECLARATION

The Director of Planning, Building and Code Enforcement has reviewed the proposed project described below to determine whether it could have a significant effect on the environment as a result of project completion. "Significant effect on the environment" means a substantial or potentially substantial, adverse change in any of the physical conditions within the area affected by the project including land, air, water, minerals, flora, fauna, ambient noise, and objects of historic or aesthetic significance.

NAME OF PROJECT: San José-Santa Clara Regional Wastewater Pond A18 South Gate Levee Repair Project

PROJECT FILE NUMBER: PP17-047

PROJECT DESCRIPTION: The proposed Project is a repair of failing sections of the levee on each side of the Pond A18 South Gate Structure. Portions of the original levee have eroded away. The City of San José (City) proposes to place sheet piles and backfill behind them within the original levee footprint to replace the eroded material and restore the South Gate Structure and its adjoining levee to its original size and allow it to function as it had prior to the erosive losses. The repair involves placing sheet piles into the levee so as to extend from a relatively undamaged portion of the levee, across the eroded/damaged area, and connect to each of the four wing walls of the existing South Gate Structure. There would thus be four rows of sheet piles, with each row being of different lengths to cross the voids of different sizes at each of the South Gate's four corners. Construction would occur over a period of approximately 30 days.

PROJECT LOCATION: San José-Santa Clara Regional Wastewater Facility at South Gate of Pond A18, north of 700 Los Esteros Road, San Jose CA 95134. LAT/LONG: 37.441458, -121.958581

COUNCIL DISTRICT: 4

APPLICANT CONTACT INFORMATION: Cathy Correia, City of San Jose Environmental Services Department, 200 E. Santa Clara Street, 10th Floor, San Jose, CA 95113-1905, (408) 975-2508.

FINDING

The Director of Planning, Building & Code Enforcement finds the project described above will not have a significant effect on the environment in that the attached initial study identifies one or more potentially significant effects on the environment for which the project applicant, before public release of this draft Mitigated Negative Declaration, has made or agrees to make project revisions that clearly mitigate the effects to a less than significant level.

MITIGATION MEASURES INCLUDED IN THE PROJECT TO REDUCE POTENTIALLY SIGNIFICANT EFFECTS TO A LESS THAN SIGNIFICANT LEVEL

A. **AESTHETICS** – The project will not have a significant impact on this resource, therefore no mitigation is required.

B. **AGRICULTURE AND FOREST RESOURCES** – The project will not have a significant impact on this resource, therefore no mitigation is required.

C. **AIR QUALITY** – The project will not have a significant impact on this resource, therefore no mitigation is required.

D. **BIOLOGICAL RESOURCES.**

Impact BIO-a:
The Project could have a substantial adverse effect, either directly or through habitat modifications, on any species identified as a candidate, sensitive, or special-status species in local or regional plans, policies, or regulations, or by the California Department of Fish and Wildlife (CDFW), U.S. Fish and Wildlife Service (USFWS), or National Marine Fisheries Service (NMFS).

Mitigation Measure BIO-1: Special-Status Fish and Aquatic Species Protection Measures.

- A biological monitor approved by NMFS, USFWS, and CDFW shall be on-site during pile driving to inspect the work zone and adjacent waters, and monitor the construction contractor's compliance with these mitigation measures and permit conditions.
- The project proponent and its contractors shall conduct in-water work only during the National Oceanic and Atmospheric Administration (NOAA)-approved work window as described in the project's consultation documents.
- Sheet piles shall be installed using a vibratory pile driver to minimize noise impacts on fish and wildlife. Vibratory pile installation shall be conducted in accordance with the U.S. Army Corps of Engineers' (USACE's) "*Proposed Additional Procedures and Criteria for Permitting Projects Under a Programmatic Determination of Not Likely to Adversely Affect Select Listed Species in California.*[1]" As described in Appendix B of that document, use of the vibratory pile driver would keep underwater sound pressure levels well below the established regulatory levels to protect fish.
- Piles shall be driven at low tides as often as practicable to reduce noise or other direct impacts on fish and to reduce turbidity that might indirectly affect them.

Mitigation Measure BIO-2: Special-Status Bird Protection Measures.

- The project proponent and its contractors shall retain a qualified agency approved[2] wildlife biologist and conduct surveys for Ridgway's rail, other special-status, and migratory birds prior to initiation of construction activities. These surveys are required for construction activities conducted during nesting season.

---

1 U.S. Army Corps of Engineers. 2013. Proposed Additional Procedures and Criteria for Permitting Projects Under a Programmatic Determination of Not Likely to Adversely Affect Select Listed Species in California (the 2013 NLAA Program). August 13, 2013.

2 The "agency"-approved biologist would be approved by USFWS and CDFW, the federal and state regulatory agencies responsible for implementing endangered species acts, and/or state regulations applicable to Fully-Protected Species.

- If Ridgway's rail or other special-status or migratory bird species are detected in the Project site during surveys, the project proponent shall consult USFWS and CDFW staff to identify the appropriate avoidance measures. The project proponent shall be responsible to ensure that USFWS and/or CDFW requirements are implemented.
- If a Ridgway's rail is detected within 500 feet of the Project site during their nesting season (February 1 – August 31), all construction activities within 500 feet of suitable nesting or forage habitat for this species shall be delayed until coordinated and approved by USFWS and/or CDFW.
- If a Ridgway's is detected within 500 feet of the Project site during the non-nesting season (September 1 – January 31), construction activities can commence, but all vegetation shall be cleared by hand or with hand tools and a biologist shall be retained on site during vegetation clearing activities to ensure that no birds are injured. Once the construction site is devoid of vegetation regular construction can commence.
- If an active nest of any other bird species is discovered within the Project site during surveys, a no-disturbance buffer zone shall be established. The no-disturbance zone shall be marked with flagging or fencing that is easily identified by the construction crew and does not affect the nesting bird. Buffer widths shall be confirmed or adjusted in discussion with USFWS and CDFW. Buffers shall remain in place as long as the nest is active or young remain in the area and are dependent on the nest.
- If any birds or raptors initiate nests within the established buffer distances while construction is happening, then it is assumed that they are habituated to the construction activities, and construction can continue as long as the birds or their nests are not physically harmed, and, if birds or raptors are special status or protected species, consultation with USFWS and/or CDFW occurs.

Mitigation Measure BIO-3: Salt Marsh Harvest Mouse Protection Measures.

- Construction activities, including site preparation, shall avoid suitable salt marsh harvest mouse habitat to the maximum extent practicable, especially during this species' breeding season (March 1 to November 30, per the Plant Master Plan EIR's Mitigation Measure Bio-2c: Salt marsh harvest mouse and salt marsh wandering shrew measures). As work during the species' breeding seasons will likely be necessary, avoidance and minimization measures shall be developed in consultation with USFWS and CDFW, and then implemented.
- Measures shall include, but are not limited to, the following:
  - Prior to initiation of work in suitable habitat, an agency-approved biologist shall be retained to conduct preconstruction surveys areas where disturbance is planned. Surveys shall take place no more than 24 hours before the onset of vegetation removal or ground-disturbing activities.
  - Prior to construction, a silt exclusion fencing with wire-mesh backing shall be installed by hand along the northern boundary of Artesian Marsh across the Pond A18 levee; and along the southern and eastern boundary of the Artesian Slough tidal marsh extending 250 feet north and south from the Project footprint, to prevent salt marsh harvest mice from entering the active work area; to protect habitat within the marsh from earthmoving activities or accidental spills, and to exclude workers from the marsh.
  - If required through agency consultation, an agency-approved biologist shall be present during all Project related activities that may impact salt marsh harvest mouse or other sensitive terrestrial wildlife species or their habitats.
  - An agency-approved biologist shall supervise the hand removal of any vegetation, including patches of pickleweed habitat detected, to avoid impacts on salt marsh harvest

mouse. If salt marsh harvest mouse individuals are observed in or near the Project work area, all construction activities shall cease until the USFWS and CDFW can be contacted and appropriate avoidance, protection, or relocation measures can be developed, approved, and implemented. Depending upon the specific location and agency guidance, these measures may include relocation or buffer distances.

Mitigation Measure BIO-4: Construction Worker- and Vehicle-related Measures.

- Prior to construction, all construction workers shall take part in an environmental awareness program reviewed by an agency-approved biologist. The work crews shall be trained in standard procedures for identifying and avoiding impacts to all special-status species with the potential to occur in the work area. The awareness program shall be conducted at the start of construction and thereafter as required for new construction personnel.
- The area beneath vehicles or equipment parked in the work area shall be checked for the presence of salt marsh harvest mouse and other wildlife before being moved, during construction in the roadway, and during movement of staging materials within the entire Project site.

Mitigation Measure BIO-5: Western Pond Turtle Protection Measures.

- Prior to the start of construction activities, the project proponent shall retain a qualified agency approved biologist to conduct preconstruction surveys for pond turtles in all suitable habitats (aquatic and upland) in the vicinity of the work site. Surveys shall take place no more than 72 hours prior to the onset of site preparation and construction activities with the potential to disturb turtles or their habitat.
- If preconstruction surveys identify active western pond turtle nests within the Project site, the biologist shall establish no-disturbance buffer zones around each nest using temporary construction fencing. The demarcation shall be permeable to allow young turtles to move away from the nest following hatching. The radius of the buffer zone and the duration of exclusion shall be determined in consultation with the CDFW. The buffer zones and fencing shall remain in place until the young have left the nest, as determined by the qualified biologist.
- A qualified biologist shall monitor construction activities in the vicinity of suitable habitat within which western pond turtle is found (either during the survey or observed during construction), and remove and relocate western pond turtles in proposed construction areas to suitable habitat outside the project limits, consistent with CDFW protocols and handling permits. Relocation sites shall be subject to CDFW approval.
- If any turtles are found in the Project site, construction activities shall halt within 50 feet and the qualified biologist shall be notified. If the biologist determines the turtle is a western pond turtle, the turtle shall be relocated into nearby suitable habitat consistent with CDFW protocols and handling permits.

Impact BIO-c

The project could have a substantial adverse effect on federally protected wetlands as defined by Section 404 of the Clean Water Act through direct removal, filling, hydrological interruption, or other means.

Mitigation Measure HYD-1: Low Impact Construction Practices. See Hydrology and Water Quality section below.

E. CULTURAL RESOURCES.

Impact CUL-b:
Implementation of the project could cause a substantial adverse change in the significance of an archaeological resource pursuant to CEQA Guidelines §15064.5.

Mitigation Measure CUL-1.1: Inadvertent Discovery of Archaeological Resources.
If prehistoric or historic-era archaeological resources are encountered by construction personnel during project implementation, all construction activities within 100 feet shall halt and the contractor shall notify the City's Environmental Services Department (ESD) personnel and Planning, Building and Code Enforcement (PBCE) Supervising Environmental Planner. Prehistoric archaeological materials might include obsidian and chert flaked-stone tools (e.g., projectile points, knives, scrapers) or toolmaking debris; culturally darkened soil ("midden") containing heat-affected rocks, artifacts, or shellfish remains; and stone milling equipment (e.g., mortars, pestles, handstones, or milling slabs); battered stone tools, such as hammerstones and pitted stones. Historic-era materials might include stone, concrete, or adobe footings and walls; filled wells or privies; and deposits of metal, glass, and/or ceramic refuse.

City's ESD or its contractor shall retain a Secretary of the Interior-qualified archaeologist to inspect the resource within 24 hours of discovery. If it is determined that the project could damage a historical resource as defined by CEQA, construction shall cease in an area determined by the archaeologist until a mitigation plan has been prepared, approved by the PBCE Supervising Environmental Planner, and implemented to the satisfaction of the archaeologist (and Native American representative if the resource is prehistoric or tribal, who will be identified by the Native American Heritage Commission [NAHC]). If the Native American representative identifies the finds as a tribal resource, ESD or its contractor shall proceed to Mitigation Measure CUL-1.2. For archaeological resources, the archaeologist, in consultation with the PBCE Supervising Environmental Planner and the City's Historic Preservation Officer, shall determine when construction can commence.

The mitigation for archaeological resources shall include preservation in place, or, if preservation in place is not feasible, data recovery through excavation. If preservation in place is feasible, this may be accomplished through one of the following means: (1) modifying the construction plan to avoid the resource; (2) incorporating the resource within open space; (3) capping and covering the resource before building appropriate facilities on the resource site; or (4) deeding the resource site into a permanent conservation easement. If preservation in place is not feasible, a qualified archaeologist shall prepare and implement a detailed treatment plan to the satisfaction of the PBCE Supervising Environmental Planner to recover the scientifically consequential information from and about the resource, prior to any excavation at the resource site. Treatment for most resources would consist of (but not necessarily limited to) sample excavation, artifact collection, site documentation, and historical research, with the aim to target the recovery of important scientific data contained in the portion(s) of the significant resource to be impacted by the project. The treatment plan shall include provisions for analysis of data in a regional context, reporting of results within a timely manner, curation of artifacts and data at an approved facility, and dissemination of reports to local and state repositories, libraries, and interested professionals.

Mitigation Measure CUL-1.2: Inadvertent Discovery of Tribal Cultural Resources.
The Native American representative shall make recommendations to the City of San José for the appropriate measures to treat the tribal cultural resource which shall be implemented in accordance with Section 15064.5 of the CEQA Guidelines.

Impact CUL-d:
Implementation of the project could disturb human remains, including those interred outside of formal cemeteries.

Mitigation Measure CUL-2: Inadvertent Discovery of Human Remains.
If human remains are encountered by construction personnel during project implementation, all construction activities within 100 feet shall halt and the contractor shall notify the ESD and PBCE Supervising Environmental Planner. ESD shall contact the Santa Clara County Coroner and make a determination as to whether the remains are of Native American origin or whether an investigation into the cause of death is required. The Native American Heritage Commission (NAHC) would be contacted within 24 hours if the Coroner determines that the remains are Native American. The NAHC would then identify the person or persons it believes to be the most likely descendant (MLD) from the deceased Native American, who in turn shall make recommendations to the City of San José for the appropriate means of treating the human remains and any associated funerary objects which shall be implemented in accordance with Section 15064.5(e) of the CEQA Guidelines.

F. TRIBAL RESOURCES

Impact TRC-a and TRC-b
Implement **Mitigation Measures CUL-1.1: Inadvertent Discovery of Archaeological Resources, CUL-1.2: Inadvertent Discovery of Tribal Cultural Resources, and CUL-2: Inadvertent Discovery of Human Remains.**
See Cultural Resources section, above.

G. GEOLOGY AND SOILS – The project will not have a significant impact on this resource, therefore no mitigation is required.

H. GREENHOUSE GAS EMISSIONS – The project will not have a significant impact on this resource, therefore no mitigation is required.

I. HYDROLOGY AND WATER QUALITY

Impact HYD-a and HYD-f:
During construction, the project has the potential to release contamination and violate water quality standards or waste discharge requirements established by regulatory agencies, or otherwise substantially degrade water quality.

Mitigation Measure HYD-1: Low Impact Construction Practices.
- Heavy equipment shall be operated from dry areas only; no equipment shall operate in water.
- Ecological screening criteria for fill: During construction activities, if the contractor suspects a potential for contaminated soil (e.g., odors or stained soil indicative of contamination) from the local material from the project area, all construction activities in the disturbed soil area

shall be halted and the ET shall be contacted to evaluate the potential contamination, which may include testing the soil. The ET shall ensure that the existing material or any fill used in conjunction with the proposed Project shall satisfy ecological screening criteria in order to avoid the introduction of contaminants.

- In the event imported soil is used, ET shall ensure it meets the standards for wetland surface material as defined in the RWQCB's "Draft Staff Report, Beneficial Reuse of Dredge Materials: Sediment Screening and Testing Guidelines."
- Sheet piles shall be placed at low tides whenever practicable to reduce the amount and duration of increased turbidity.
- Rock backfill material shall require certification that the material is virgin or has been tested and free of contaminants from a qualified vendor prior to use in construction activities.
- All construction materials and debris shall be contained by using Best Management Practices (BMPs), including silt fences, straw wattles, and gravel bags, during construction.
- All BMPs installed during construction shall be removed after construction is completed.

J. HAZARDS AND HAZARDOUS MATERIALS.

Impact HAZ-a:
Project construction could create a significant hazard to the public or the environment through reasonably foreseeable upset and accident conditions involving the release of hazardous materials into the environment.

Implement **Mitigation Measure HYD-1: Low Impact Construction Practices**
See Hydrology and Water Quality, above.

K. LAND USE AND PLANNING – The project will not have a significant impact on this resource, therefore no mitigation is required.

L. MINERAL RESOURCES – The project will not have a significant impact on this resource, therefore no mitigation is required.

M. NOISE – The project will not have a significant impact on this resource, therefore no mitigation is required.

N. POPULATION AND HOUSING – The project will not have a significant impact on this resource, therefore no mitigation is required.

O. PUBLIC SERVICES – The project will not have a significant impact on this resource, therefore no mitigation is required.

P. RECREATION – The project will not have a significant impact on this resource, therefore no mitigation is required.

Q. TRANSPORTATION / TRAFFIC – The project will not have a significant impact on this resource, therefore no mitigation is required.

R. UTILITIES AND SERVICE SYSTEMS – The project will not have a significant impact on this resource, therefore no mitigation is required.

S. MANDATORY FINDINGS OF SIGNIFICANCE

PUBLIC REVIEW PERIOD

Before 5:00 p.m. on **September 21, 2017**, any person may:

1. Review the Draft Mitigated Negative Declaration (MND) as an informational document only; or

2. Submit written comments regarding the information and analysis in the Draft MND. Before the MND is adopted, Planning staff will prepare written responses to any comments, and revise the Draft MND, if necessary, to reflect any concerns raised during the public review period. All written comments will be included as part of the Final MND.

Rosalynn Hughey, Director
Planning, Building and Code Enforcement

Circulated on: **August 22, 2017**

Deputy

TABLE OF CONTENTS

San José-Santa Clara Regional Water Facility Pond A18 Levee Repair

Page

San José-Santa Clara Regional Water Facility Pond A18 Levee Repair i

Chapter 1. Project Description 1-1

1.1 Introduction 1-1
1.2 Relationship to the Plant Master Plan 1-2
1.3 Project Location 1-3
1.4 Project Need and Objectives 1-3
1.4.1 Public Safety/Flood Protection 1-7
1.4.2 Continued Provision of Public Services 1-8
1.4.3 Wildlife Protection Factors 1-9
1.5 Proposed Project 1-9
1.6 Operations 1-10
1.7 Construction Methods and Schedule 1-10
1.7.1 Schedule 1-10
1.7.2 Construction Methods and Sequence 1-11
1.7.3 Affected Roadways 1-12
1.8 Areas and Volumes of Fill 1-13
1.9 Required Permits and Regulatory Approvals 1-15

Chapter 2. Environmental Checklist 2-1

2.1 Environmental Factors Potentially Affected 2-3
2.2 Environmental Checklist 2-4
2.2.1 Aesthetics 2-4
2.2.2 Agricultural and Forest Resources 2-6
2.2.3 Air Quality 2-8
2.2.4 Biological Resources 2-15
2.2.5 Cultural Resources 2-36
2.2.6 Tribal Cultural Resources 2-43
2.2.7 Geology, Soils, and Seismicity 2-45
2.2.8 Greenhouse Gas Emissions 2-48
2.2.9 Hazards and Hazardous Materials 2-50
2.2.10 Hydrology and Water Quality 2-54
2.2.11 Land Use and Land Use Planning 2-60
2.2.12 Mineral Resources 2-62
2.2.13 Noise 2-63
2.2.14 Population and Housing 2-67
2.2.15 Public Services 2-68
2.2.16 Recreation 2-70
2.2.17 Transportation and Traffic 2-71
2.2.18 Utilities and Service Systems 2-73

Page

2.2.19 Mandatory Findings of Significance 2-76

Chapter 3. Report Preparation 3-1
3.1 Lead Agency 3-1
3.2 Environmental Consultants 3-1

Appendices

A. Air Quality Project Construction Emissions Worksheets..... A-1
B. Biological Resources Technical Memorandum B-1
C. Design Plans.....C-1

List of Figures

Figure 1-1 Project Vicinity 1-4
Figure 1-2 Project Location 1-5
Figure 1-3 Project Site Plan 1-6
Figure 1-4 Location of Fill Placement..... 1-14
Figure 2-1 Vegetation Communities and Habitat Types 2-16

List of Tables

Table 1-1 Summary of Areas and Volume of Fill 1-12
Table 2-1 Average Daily Unmitigated Construction-related Emissions (pounds/day) 2-13
Table 2-2 Special-Status Species with Moderate or High Potential to Occur in the Study Area 2-23
Table 2-3 Proposed General Plan Land Use Compatibility Guidelines for Community Noise in San José (GP Table EC-1) 2-64

CHAPTER 1
Project Description

The following text provides relevant background for the San José-Santa Clara Regional Wastewater Facility's (RWF or Facility) Pond A18 South Gate Levee Repair Project (proposed Project), which is City of San José File Number PP17-047. It also identifies the Project location and describes the Project area and its vicinity, identifies the Project objectives and need, reviews proposed facilities and operations, and summarizes the proposed construction process and schedule.

1.1 Introduction

The RWF treats domestic, industrial, and commercial wastewater from San José, Santa Clara, Campbell, Los Gatos, Monte Sereno, Cupertino, Milpitas, and Saratoga; and parts of Sunnyvale, Los Altos, and unincorporated Santa Clara County. In total, the existing service area covers roughly 300 square miles and contains a service population of approximately 2 million people (1.4 million residents and 600,000 workers).

Originally constructed in 1956, the Facility treats an average of 110 million gallons per day (mgd) of wastewater, with an existing capacity of 167 mgd. The Facility provides a tertiary level of treatment, in accordance with state and local regulations. The Facility produces recycled water for industrial use and toilet flushes, and also discharges treated wastewater to the South San Francisco Bay. The City of San José (City) manages the RWF itself and the surrounding RWF lands, which together total approximately 2,680 acres. About half of this area consists of current and former lagoons and drying beds used for biosolids management and lands that have provided a buffer between Facility operations and neighboring land uses.

One portion of the RWF's surrounding lands is Pond A18, a former salt-production pond that is now owned and operated by the RWF. Pond A18 is separated from tidal flows of the San Francisco Bay by a levee and the North and South Gate Structures. Both structures control water flows between Artesian Slough, Coyote Creek, and those of the 856-acre Pond A18 through two large pipes buried within the Pond A18 levee at each of the gate structures. These two water control structures are operated by the RWF under the existing Waste Discharge Requirements (WDR) described in the San Francisco Bay Regional Water Quality Control Board's (RWQCB) Order Number R2-2005-0003. Under that Order, the RWF must meet specific water quality limits. The RWF uses Pond A18 to buffer the facility from adjacent land uses, promote and maintain existing open water habitat in the pond, and avoid seasonal pond formation.

As is explained in more detail later in this document, continued erosion of the South Gate Structure's adjacent levee threatens its stability. Specifically, the erosion has advanced such that future maintenance access along the crest of the levee is threatened, which would inhibit management of the current water quality program. Recent observations have indicated that the heavy storms of winter 2016-2017 have sped the erosion and increased the chance of a levee failure unless a repair is made to increase the resistance to further scour or other forms of degradation. The proposed Project would implement a levee repair solution without requiring replacement of the South Gate Structure or adding concrete or other forms of fill to the bottom of Artesian Slough. Instead, it limits fill to the area of the levee in its original condition (i.e., before the erosional losses), as it described below.

1.2 Relationship to the Plant Master Plan

The City has prepared the San José-Santa Clara Water Pollution Control Plant Master Plan (Master Plan) for the RWF that presents various improvement projects needed to address aging infrastructure, reduce odors, accommodate projected population growth in the Facility's service area, and comply with changing regulations that affect the Facility. The Master Plan also includes a comprehensive land use plan for the lands surrounding the Facility operational area. The master planning effort identified both near-term and long-term (to year 2040) Facility improvements and land uses, which have been evaluated in the San José-Santa Clara Water Pollution Control Plant[1] Master Plan Environmental Impact Report (Plant Master Plan EIR; City of San José File No. PP11-043; State Clearinghouse # 2011052074) certified in November, 2013. The Master Plan effort focuses on future planning efforts for the Facility and surrounding areas.

Because of its nature as a repair of a failing piece of RWF infrastructure (as opposed to a planned Facility improvement or upgrade of aging infrastructure) the proposed Project evaluated in this initial study is independent and separate from the projects evaluated in the Plant Master Plan EIR. Completion of the Project is needed irrespective of the improvements proposed in the Master Plan. Specifically, the proposed Project would meet an existing need at the Facility to retain the integrity of the Pond A18 levee and its ability to manage water flows into and out of that pond, in accordance with the WDR. The Project would not result in increased wastewater treatment capacity at the existing Facility. Thus, this Initial Study/Mitigated Negative Declaration is considered to be entirely separate from the Plant Master Plan EIR, and does not rely on the Plant Master Plan EIR for tiering under the California Environmental Quality Act (CEQA). The approved mitigation measures provided in the adopted PMP EIR Mitigation Monitoring and Reporting Program (MMRP) have been incorporated by reference, with modifications (additions, deletions, renumbering/renaming, or other minor revisions) made as necessary to apply to the proposed Project. The adjusted mitigation measures do not change the original impact conclusions from the Plant Master Plan EIR, nor are they considerably different from that analyzed in the Plant Master Plan EIR.

[1] The legal name of the facility remains "San José /Santa Clara Water Pollution Control Plant" but beginning in early 2013, the facility's common name was changed to San José-Santa Clara Regional Wastewater Facility.

1.3 Project Location

The RWF is located at 700 Los Esteros Road in the City of San José, Santa Clara County, California. Pond A18 is located north of the main portion of the RWF property, near the southern edge of San Francisco Bay. To the west of the pond is Artesian Slough and another former salt production pond known as Pond A17, which is now part of a tidal marsh restoration site. The lower portions of Coyote Creek are located to the north and east of the pond.

The South Gate Structure is located along western levee of Pond A18, near the southwestern corner of the pond. The Pond A18 levee road is located on U.S. Fish and Wildlife Service (USFWS) property leased by the City of San José, behind two sets of locked gates north of Los Esteros Road. Maps showing the Project vicinity (**Figure 1-1**), Project location (**Figure 1-2**), and Project site plan (**Figure 1-3**) are included below.

The study area around the actual project work area includes the South Gate Structure, the adjacent levee, and some of the surrounding waters that were included in the field surveys and desktop research conducted in preparation for assessing possible project impacts. That study area is approximately 0.9 acre (estimated from a square approximately 200 feet on each side, as shown in Figure 1-2). However, the actual area of direct effect from project construction is limited to the area where the sheet piles, tie rods, and backfill would be placed. That area is shown on Figure 1-3. Much of that area is the existing levee top road that would be replaced and restored to pre-project conditions. Therefore, as discussed in several sections of the following document, the areas of actual disturbance to the environment (including wetlands, waters, and other habitats) are generally less than one-tenth of an acre.

1.4 Project Need and Objectives

The South Gate Structure is approximately 13 years old, and despite ongoing maintenance activities, the portion of the levee immediately adjacent to the structure has undergone increasingly rapid deterioration in recent months due to a series of strong storm events. A recently conducted condition assessment stated that immediate action to mitigate erosion and begin levee repair is needed because significant additional degradation could occur during the next year due to formation of scour holes and levee embankment settlement and erosion on all four sides of the South Gate Structure.

Typically, the North Gate is used for water intake, and the South Gate is the outflow into Artesian Slough. In the summer of 2015, unanticipated changes in pond conveyance operations occurred due to the emergency replacement of Pond A18's North Gate Structure as permitted by the U.S. Army Corps of Engineers (USACE). During the reconstruction of this structure from June through August 2015, the South Gate Structure was used to pulse slough water into and out of the pond to maintain pond water elevation and water quality. This pulsing of water caused bank erosion and active scouring/slumping on the outboard levee proximal to the South Gate Structure.

SOURCE: ESRI; ESA, 2017

Pond A18 South Gate Levee Repair Project

Figure 1-1
Project Vicinity

ESA

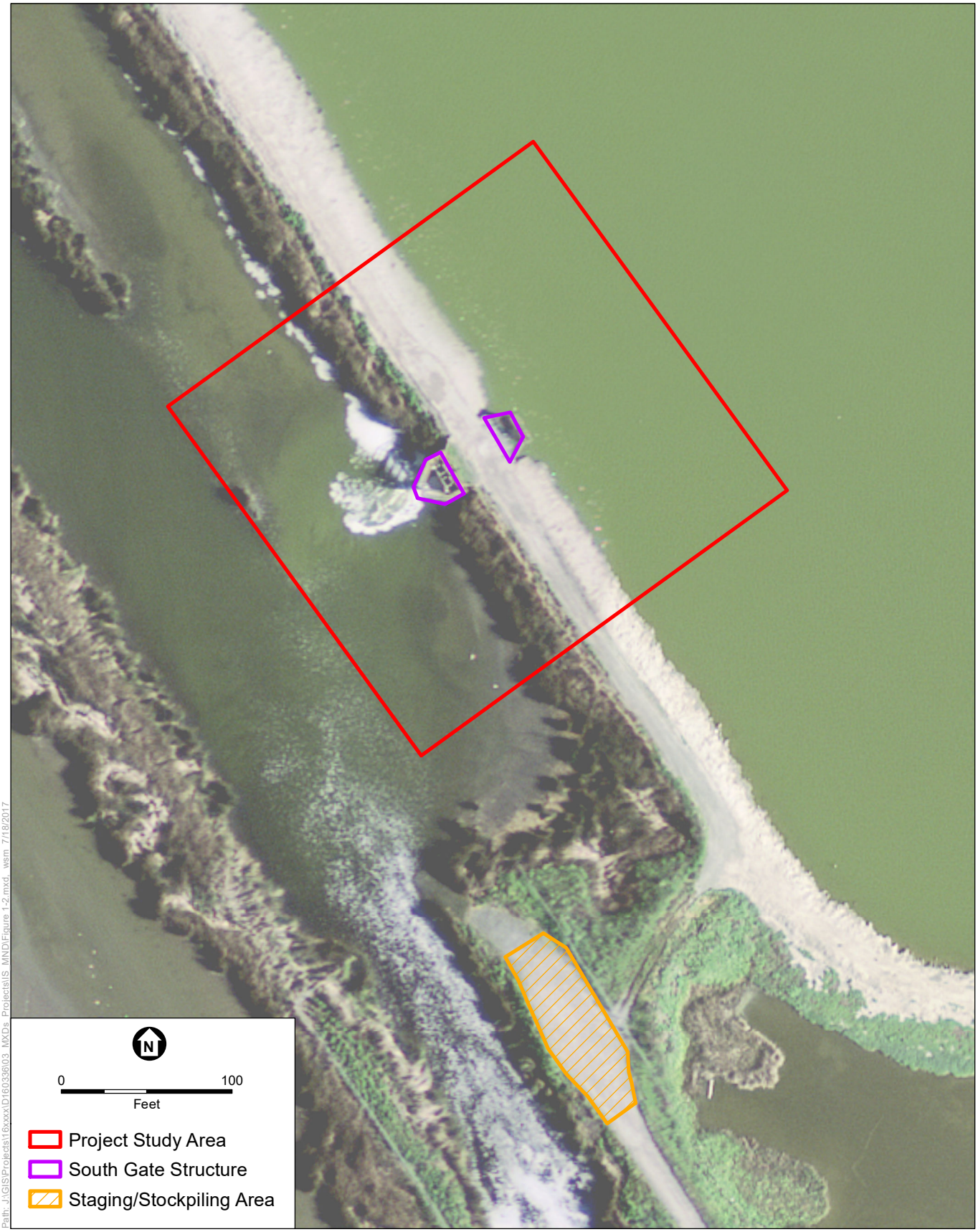

Path: J:\GIS\Projects\16xxxx\D160336\03_MXDs_Projects\IS_MND\Figure 1-2.mxd, wsm, 7/18/2017

SOURCE: ESRI; ESA, 2017

Pond A18 South Gate Levee Repair Project

Figure 1-2
Project Location

ESA

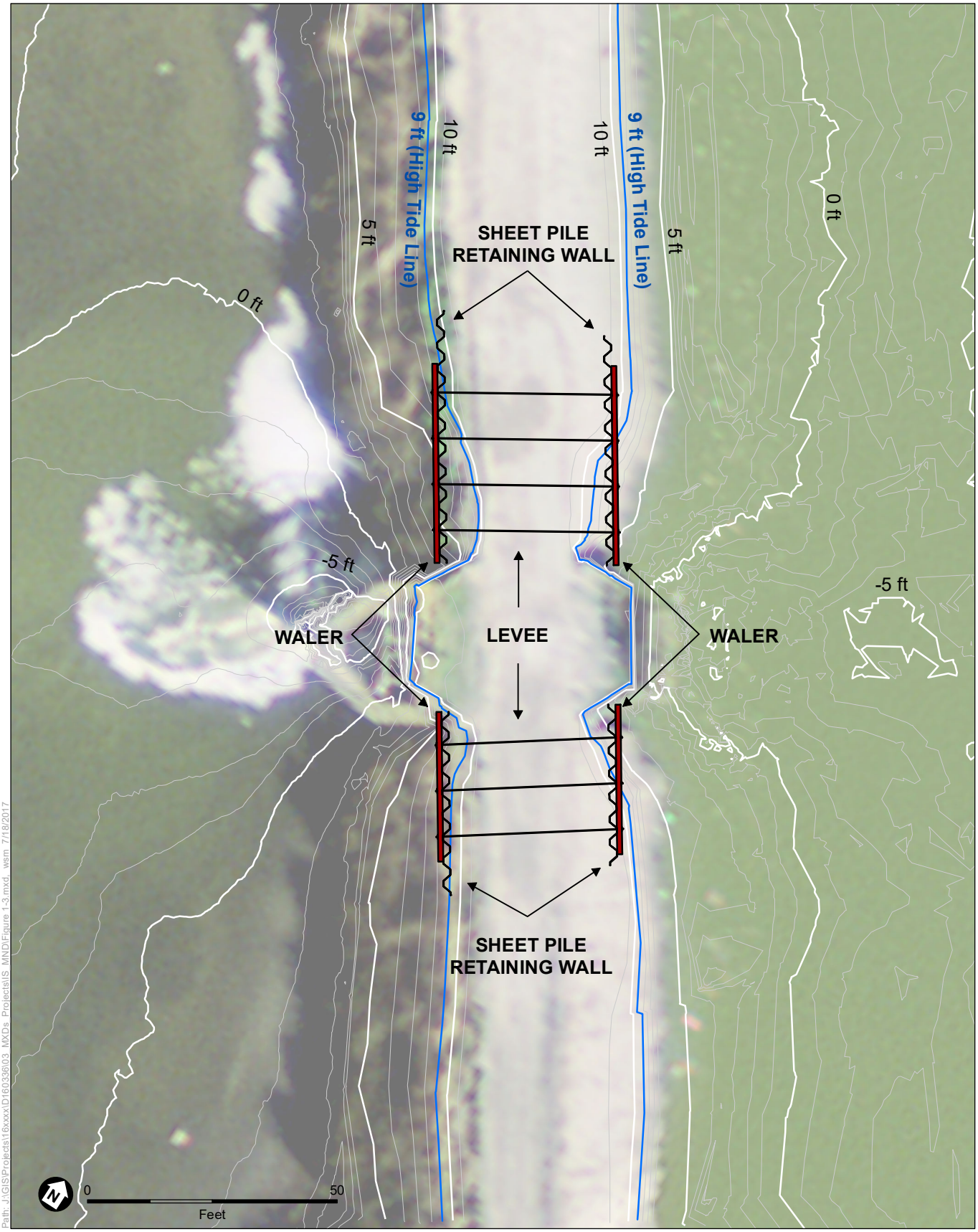

SOURCE: HydroScience Engineers, 2017; ESA, 2017

Pond A18 South Gate Levee Repair Project

Figure 1-3
Project Site Plan

ESA

Once the North Gate Structure's construction was completed in August 2015, the water control structures were configured to return to the pond's normal regime of intake at the North Gate Structure and discharge from the South Gate Structure. While operating under this configuration, the erosion around the South Gate Structure progressed to the extent that RWF engineering staff recommended an alternate flow regime to reduce risk of levee failure and breach. As a result, continuous circulation of Pond A18 was subsequently reoriented for inflow at the South Gate Structure and discharge from the North Gate Structure in early 2016. This change in operation was meant to slow erosion until repairs can be made.

In addition, the recent unforeseen storms of 2017 brought record rainfall, wind, and tides that exacerbated the South Gate Structure's levee stability issues beyond acceptable levels. Continued erosion of the levee will threaten the stability of the levee, impede access for RWF staff to continue to operate both gate structures, restrict vehicle access for levee inspections, and may result in a full levee breach.

A levee breach at the South Gate would cause uncontrolled flows of water out of Pond A18, which would pose a flood risk and would impair the ability of the RWF to maintain water quality resulting in a violation of the RWQCB discharge permit. A breach would also allow uncontrolled tidal flooding into Pond A18 and expose over 9,000 feet of non-engineered levees on the south side of the pond to erosive tidal and wave actions, as well as severely limit access for emergency repairs. The southern levees are a critical, last layer of protection against tidal flooding to RWF that would be directly threatened if compromised by tidal action. The southern levee has several existing erosion-weakened areas that would likely be at serious risk of failure if tidal action occurs in Pond A18. More details on the public safety/flood protection, continued provision of public services, and wildlife protection consequences of a levee breach at the South Gate Structure are provided below.

1.4.1 Public Safety/Flood Protection

Currently the levee on the west side of Pond A18 and the northern/eastern levee (an engineered levee owned by the Santa Clara Valley Water District), provide the flood protection for land/property south of Pond A18. Under a breach scenario, the City would no longer have hydraulic control of pond discharges or water levels in the 856 acres of Pond A18. Flood control would then depend on the southern levee (sometimes referred to as the "stairstep" levee because of the shape of its alignment as seen from above). This is not an engineered levee, and much of its 9,000-foot-long alignment has the lowest top elevation and in in the poorest condition of the levees surrounding Pond A18. Even without tidal action, over the past 13 years the southern levee has experienced substantial erosion and undercutting just from wave action and wind fetch within the pond. If tidal action and fluctuating water levels were added to wind and wave fetch, the risk of failure of the southern "stairstep" levee and subsequent flooding south of Pond A18 would increase rapidly (within a period of months).

The properties that would be exposed to increased flood risk due to breach of the Pond A18 levee include critical infrastructure that provide essential public services to up to eight South Bay cities and four sanitation districts:

- The San José-Santa Clara Regional Wastewater Facility (RWF) – This facility is the largest tertiary wastewater treatment facility in the western United States and treats 110 mgd, serving 1.4 million residential customers and 17,000 commercial connections.

- Silicon Valley Advanced Water Purification Center (SVAWPC) – This facility is the largest advanced water purification plant in Northern California and generates 8 mgd of highly purified water to blend with the existing recycled water supply produced at the neighboring RWF to enhance the quality and expand the use of recycled water.

- Zero Waste to Energy Development Facility (ZWED) – This facility is the world's largest dry fermentation anaerobic digestion facility and the first large-scale commercial facility of its kind in the United States. The facility processes an estimated 90,000 tons per year of commercial organic waste that would otherwise go to landfill, and converts it to approximately 1.6 megawatts of renewable energy and 34,000 tons of compost.

- Zanker Road Landfill and Materials Processing Facility – This facility processes more than 2,000 tons of mixed debris per day. This facility is a leader in processing mixed loads of demolition debris and can process unsorted demolition debris at the rate of 80 tons per hour with a 95 percent diversion rate on average.

1.4.2 Continued Provision of Public Services

As noted above, the RWF provides wastewater treatment services to approximately 1.4 million residents of Silicon Valley. The water in Pond A18 is managed by the RWF in compliance with the RWQCB's Number R2-2005-0003. However, following a Pond A18 levee breach and resultant loss of control over water levels and flows in or out of the pond, the City may not be able to achieve the following requirements of the Order:

1. Maintaining water levels within the pond to avoid wetting and drying of the pond bottom in order to avoid:
    a. Excessive odors from bottom pond sediments becoming exposed to air
    b. Increased potential for mercury methylation
    c. Increased erosive action on the interior of the levees surrounding the pond, which increases flood risk to areas south of Pond A18. (If water levels are not properly maintained, the risk to flooding due to compromised integrity of the inboard (pond side) portions of the Pond A18 levee increases.)
2. Impacts to fish and wildlife
    a. Potential for disruption to migrating salmonids (i.e., fish entrainment in Pond A18).
    b. Increased potential for avian botulism outbreaks.

A levee breach at Pond A18 would result in uncontrolled water movement between the slough and pond, potential violation of Order Number R2-2005-0003, and potential impacts to operation of the RWF and provisions of wastewater treatment services to Silicon Valley.

1.4.3 Wildlife Protection Factors

Failure of the levee at the South Gate Structure would result in the City losing control of flood flow exchange in Pond A18. If the levee breached, waters from the managed pond would freely exchange with Artesian Slough and the San Francisco Bay. A levee failure may cause unintended effects on wildlife in Pond A18 and surrounding channels. For example, federally threatened steelhead (*Oncorhynchus mykiss*) migrating from the Pacific Ocean to upstream spawning areas in the upper Coyote Creek watershed may be redirected into Pond A18 at the levee breaches and become stranded in the pond.

Importantly, levee and South Gate Structure repair after a breach and failure would be significantly more difficult and costly, and have substantially greater environmental impacts. For example, cofferdams and dewatering of an area around the breach may be necessary. Larger construction equipment and/or work in the channel or pond may also be necessary, and construction access would be impaired. Conversely, the proposed repair would stabilize the levee and have reduced construction impacts on the environment than would repair after a levee failure.

1.5 Proposed Project

The proposed Project is a repair of failing sections of the levee on each side of the Pond A18 South Gate Structure. As noted above, portions of the original levee have eroded away. The City proposes to place sheet piles and backfill behind them within the original levee footprint to replace the eroded material and restore the South Gate Structure and its adjoining levee to its original size and allow it to function as it had prior to the erosive losses. As Figure 1-3 illustrates, the repair involves placing sheet piles into the levee so as to extend from a relatively undamaged portion of the levee, across the eroded/damaged area, and connect to each of the four wing walls of the existing South Gate Structure. There would thus be four rows of sheet piles, with each row being of different lengths to cross the voids of different sizes at each of the South Gate's four corners. Each row would be of a different length, as listed below. The planned lengths, rounded up to the nearest linear foot, are as follows:

- Northeast corner = 46 feet
- Southeast corner = 33 feet
- Southwest corner = 37 feet
- Northwest corner = 51 feet

Thus, the planned total length of these sheet pile rows is 167 feet, though the actual total length may be slightly longer, with the added length extending farther into the undamaged portion of the levee to add stability. The four sheet pile rows would be arranged roughly parallel with the long axis of the levee alignment. Each sheet pile row would consist of individual z-type steel sheet piles that would be driven vertically into the levee side slope and/or the interior of Pond A18 or Artesian Slough. Each sheet pile would be 35 to 40 feet long, 28 to 35 inches wide, and driven downward until its top end was approximately level with the top of the levee surface elevation. That levee surface varies but it is typically at approximately 11 to 12.5 feet NAVD88).

Once the four sheet pile rows are in place, 30- to 40-foot long steel walers[2] would be placed on the water side of each sheet pile row and connected with tie rods to the corresponding sheet pile and walers on the other side of the levee. The tie rods would be installed in narrow trenches approximately two to three feet deep excavated across the levee top (above the high-tide line). The tie rods and walers would then be at approximately 10 feet elevation NAVD88. The tie rods are needed to strengthen the repair and reduce the required depth of the sheet piles. The excavated material would cover the tie rods once installed, and the levee crown would be regraded and surfaced as needed. Finally, the eroded areas would be backfilled with rock aggregate to fill the voids between the sheet pile row, the wing walls of the South Gate Structure, and the remaining section of levee.

The planned staging/stockpiling area is approximately 0.1 acre (up to 140 feet by 35 feet) of existing levee access road and other compacted and unvegetated turnout areas (Figure 1-2). This area would not be modified for Project implementation or otherwise affected by Project activities. In addition, another approximately 600 feet of existing levee roads between the staging area and the South Gate structure would be used for construction access.

1.6 Operations

Once this repair is completed, the City may continue operating the flows into and out of Pond A18 in the same way it has been recently (i.e., in through the South Gate and out through the North Gate). Alternatively, the City may return to its normal flow pattern (i.e., in through the North Gate and out through the South Gate) and monitor for any additional erosion or scour of either the newly repaired levee or the scour hole outside of the South Gate in Artesian Slough.

The repaired levee section and the sheet piles and backfill material would be visually inspected once a month by Facility engineers. The City would continue to operate the RWF in the way it does currently, as required by RWQCB Order Number R2-2005-0003, and the City would work with RWQCB to maintain that compliance.

1.7 Construction Methods and Schedule

The following section summarizes the construction process, identifies construction access roads, and conveys the anticipated construction schedule for the Project. The design plans for the proposed Project construction are provided as Appendix C.

1.7.1 Schedule

Construction of the Project would occur over a period of up to 30 days, anytime between October 2017 and November 2018. Within the 30-day time frame, design plans call for approximately 16 to 20 working days. Of those working days, there are 6 to 8 days of in-water work expected.

[2] Walers are long, short, horizontal structural beams designed to transmit loads from the levee's soil and backfill material through the sheet piles and to the tie rods. This braces the levee and transfers the retained load evenly between tie rod connection points on each side of the levee. These horizontal beams attach to the outside of the sheet pile by long rods threaded at the ends called tie rods. Please see the project plan sheet 2 for a typical waler.

Work is not expected to take place at night or on the weekends, though weekend work may be necessary to finish construction prior to winter rain.

1.7.2 Construction Methods and Sequence

As noted above, the construction activities in the proposed Project are limited to the levee repair, which would be performed by placing sheet piles and backfill material into the eroded portions of the levee and using walers and tie rods to further stabilize the levee's side slopes. The rest of this section explains the construction methods that would be used to implement the Project. The bullets provide more detail on the repair equipment, timing, and sequence of steps in the levee stabilization plan.

- **Mobilization:** The construction contractor would mobilize to the Project site and establish a staging and stockpile area (shown on Figure 1-2). The Project site would be accessed from the levee road through the gated entry from Los Esteros Road. Construction equipment would be transported to the site, and necessary materials, including sheet piles, and tie rods, would be delivered to the stockpile area. Standard haul trucks would be used for these deliveries. This is expected to take up to two days.

- **Installation of construction best management practices (BMPs):** The contractor would establish erosion protection measures to minimize erosion into the pond and slough. These measures would generally consist of silt fences, straw wattles, and gravel bags. These BMPs would help reduce siltation and other environmental impacts.

- **Site preparation:** The construction contractor would clear and grub the site to remove vegetation and provide clean and accessible areas in which to place the sheet piles. Clearing and grubbing would be done with a backhoe. Throughout construction, all work would take place from the levee top. All equipment used in conjunction with this action would operate from dry areas only; no equipment would operate in-water. An area of approximately two to three feet on each side of the four rows of sheet piles would be cleared of vegetation. The maximum total combined area of potential vegetation removal is up to 1,000 square feet; however, because some of the sheet piles would be placed in unvegetated sections of existing levee, and some would be placed directly into water, the actual area of vegetation removal would be substantially less than that. A biological monitor would first survey the site to check for special-status species and implement avoidance measures if active nests or individuals are located. If an active nest is found in proximity to the site, avoidance measures would be employed; these include a no-work buffer until the bird has fledged. This work is expected to take up to two days.

- **Sheet pile placement:** The four rows of sheet piles would be constructed (as described above) using a vibratory pile driver, which would reduce noise-related environmental impacts. A crane would be used to move the sheet piles into place. This work is expected to take up to four to eight days, but much of that would not be "in-water work" because many of the piles would be going into the levee top surface or side slopes, or because the piles would be driven at low-tide to the extent practicable within other schedule constraints.

- **Tie rod placement:** As described above, the channels for the tie rods would be excavated using a backhoe. The tie rods would be epoxy coated for corrosion resistance. The rest of the trenches would then be backfilled with soil and aggregate base (crushed rock). A

backhoe/loader would be used to replace the material and regrade the levee surface. This is expected to take up to three days, but it is not in-water work.

- **Backfill:** A backhoe would be used to place the rock aggregate into each of the four holes around the South Gate Structure. The backfill material would then be compacted with a plate compacter. This work is expected to take up to two days. The total areas and volumes of fill planned for the proposed Project are presented in **Table 1-1**.

- **Site Restoration and demobilization:** Following the work described above, the levee crown would be regraded to the pre-project conditions. Construction haul trucks would be used to remove equipment and any surplus materials from the site. No revegetation of levee side slopes is proposed. Trash or debris would be removed and the surface of the levee would be restored to pre-project conditions. This is expected to take up to three days.

TABLE 1-1
SUMMARY[1] OF AREAS AND VOLUME OF FILL

Corner	Area (ft^2) / (ac)	Fill Volume[2] (yd^3)
Total Quantities of Fill Material		
Southwest	242 / 0.006	15
Southeast	162 / 0.004	18
Northwest	384 / 0.009	48
Northeast	284 / 0.007	19
Total	**1,072 / 0.025**	**100**
Quantities Placed at or Below HTL		
Southwest	101 / 0.002	7
Southeast	56 / 0.001	3
Northwest	242 / 0.006	21
Northeast	101 / 0.002	8
Total[3]	**500 / 0.011**	**39**

NOTES:
1. The volume and area of sheet piles and backfill material are presented together; the sheet piles make a *de minimus* contribution (estimated at 2-4%) to the total volume of fill to be placed.
2. Fill volumes were estimated from preliminary designs. The total volume of backfill material would not exceed 100 cubic yards.
3. Sum of individual rows may not equal the presented total due to rounding. All fill is effectively permanent.

1.7.3 Affected Roadways

Construction equipment and workers would access the site from Los Esteros Road and Zanker Road, generally exiting from State Route (SR) 237 from the Zanker Road off-ramp. Site access would be only to and from the South Gate Structure and not into the main portions Facility itself. The South Gate Structure is accessed by a gated levee road, which is only accessible to Facility staff and its escorted contractors.

1.8 Areas and Volumes of Fill

This section presents the total areas and volumes of fill material and the portion of that material that would be placed in water, marsh vegetation, or other habitat areas. The analysis presented in several sections of the rest of this document draws upon these estimates and includes them in assessing potential impacts on the local hydrology, water quality, biological resources, or other conditions as appropriate.

As described above, and as shown in **Figure 1-4**, below, the actual area of direct effect from project construction is limited to the area where the sheet piles, tie rods, and backfill would be placed. That area would be approximately 3,600 square feet (0.08 acre). Of that area, approximately one-third is the existing levee top road that would be restored to pre-project conditions.

Of the remainder, only the portions of the sheet piles and backfill material (rock aggregate) placed below the mapped high-tide line (HTL) would be in-water work. The delineation of jurisdictional wetlands conducted for the Project field-mapped the HTL at 9 feet elevation NAVD88. Therefore, only the areas and volumes of fill below that elevation are considered impacts to waters of the U.S. or of the State of California. The potential habitat for special-status species is similarly limited to waters (for fish species) or marsh/wetlands (for terrestrial species in that elevation range).

Designs call for 167 linear feet of sheet piles to be placed, but as noted above, there could be additional length added into the existing and more structurally sound portions of the levee. Thus, of the 167 to 200 linear feet of sheet piles to be placed, only a relatively small portion of the piles would be placed below the HTL. Everything else would either be within the levee itself or extending out of the upper part of the levee side slopes and would thus be in the air and above U.S. Army Corps of Engineers jurisdiction. Once the sheet piles are installed, aggregate rock would be placed within the void between the existing levee and sheet piles. No tie rods or steel walers would be placed in water, as they would be located well above the HTL.

The total areas and volumes of fill the areas and volumes of fill to be placed below 9 feet elevation NAVD88 are presented in the table below. The areas are also illustrated on Figure 1-4, which shows the areas of project impacts. All areas were calculated in GIS based on the CAD files received from HydroScience Engineers. The volumes for fill placed below 9 feet elevation were derived by HydroScience Engineers directly from the engineering drawings prepared by California Engineering and Geology. The total volume of backfill material would not exceed 100 cubic yards, but the allocation of that total across the four corners of the South Gate Structure was not directly calculated.

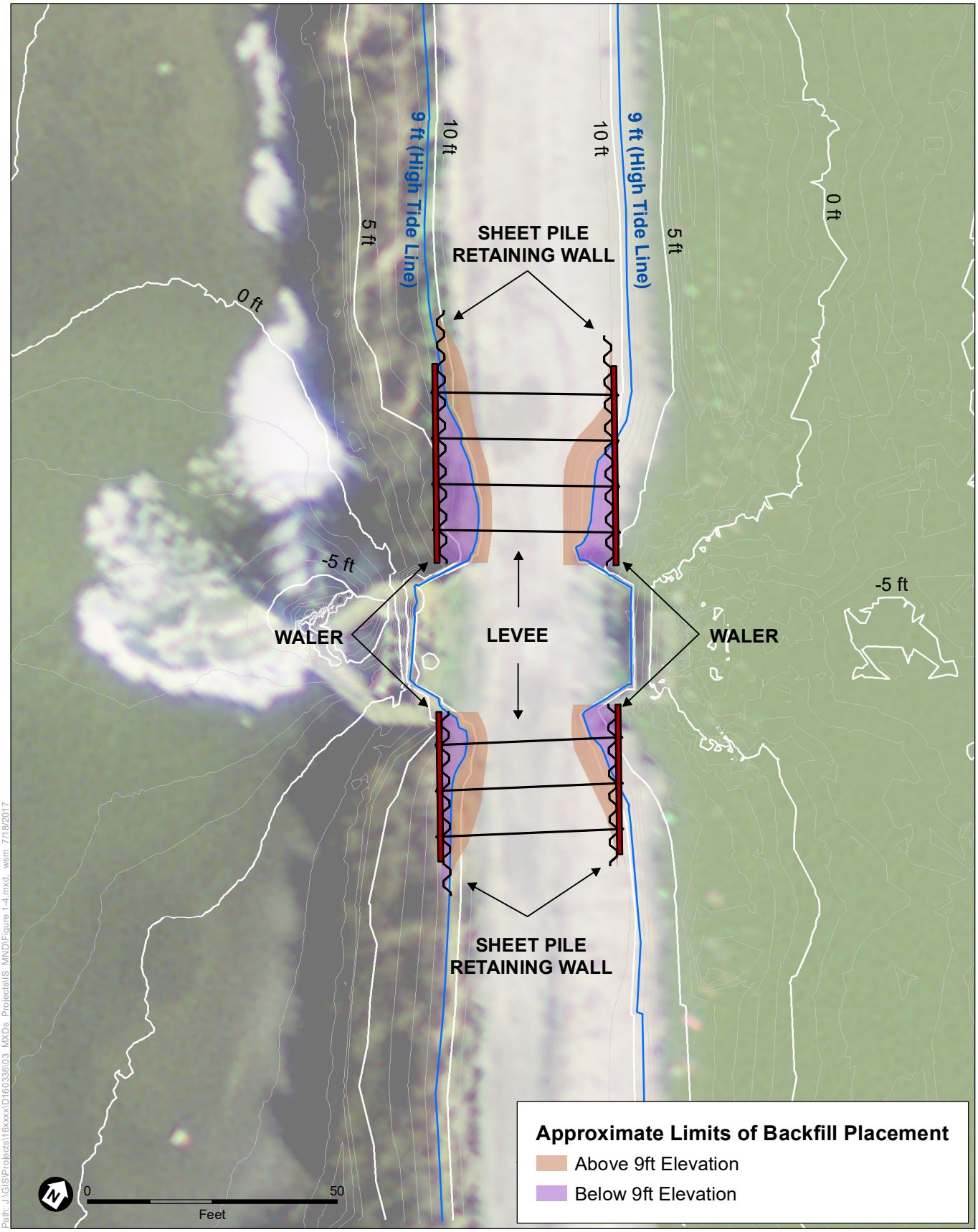

SOURCE: HydroScience Engineers, 2017; ESA, 2017

Pond A18 South Gate Levee Repair Project

Figure 1-4
Locations of Fill Placement

ESA

1.9 Required Permits and Regulatory Approvals

The proposed Project is expected to require the following regulatory permits and other regulatory approvals.

- Verification of Delineation of Jurisdictional Wetlands Report from U.S. Army Corps of Engineers (USACE)
- Section 404 Nationwide Permit from the USACE
- Section 401 Water Quality Certification from San Francisco Regional Water Quality Control Board
- Abbreviated Regionwide Permit from San Francisco Bay Conservation and Development Commission
- Informal Section 7 Consultation with USFWS (i.e., no Biological Opinion is expected)
- Informal Section 7 Consultation with National Marine Fisheries Service (i.e., no Biological Opinion is expected)
- Section 1600 Lake and Streambed Alteration Agreement from California Department of Fish and Wildlife (CDFW)
- Informal Consultation with CDFW under the California Endangered Species Act for longfin smelt

Section 106 Consultation with the State Historic Preservation Office for cultural resources is not expected to be necessary; that is dependent on USACE determination during application process.

Based on initial discussions with the regulatory agencies, the City expects to use individual permit applications to cover the above-listed regulatory procedures.

This page intentionally left blank

CHAPTER 2
Environmental Checklist

1. Project Title:	Pond A18 South Gate Levee Repair Project
2. Lead Agency Name and Address:	City of San José Department of Planning, Building and Code Enforcement, Planning Division 200 East Santa Clara Street, 3rd Floor Tower; San José CA 95113-1905
3. Contact Person and Phone Number:	Kieulan Pham, Planner (408) 535-3844
4. Project Location:	South Gate of Pond A18, north of 700 Los Esteros Road San José, Santa Clara County, California 37.441458, -121.958581
5. Project Sponsor's Name and Address:	City of San José Environmental Services Department; 200 E. Santa Clara St., Tower FL 10 San José, CA 95113
6. General Plan Designation(s):	Open Space, parklands, and habitat on the Pond A18 side of the levee, and Public/Quasi Public land on the Artesian Slough side of the levee
7. Zoning:	Agricultural Land

8. **Description of Project:** The proposed Project is a repair of failing sections of the levee on each side of the Pond A18 South Gate Structure. Portions of the original levee have eroded away. The City of San José (City) proposes to place sheet piles and backfill behind them within the original levee footprint to replace the eroded material and restore the South Gate Structure and its adjoining levee to its original size and allow it to function as it had prior to the erosive losses. The repair involves placing sheet piles into the levee so as to extend from a relatively undamaged portion of the levee, across the eroded/damaged area, and connect to each of the four wing walls of the existing South Gate Structure. There would thus be four rows of sheet piles, with each row being of different lengths to cross the voids of different sizes at each of the South Gate's four corners. Construction would occur over a period of up to 30 days. See Chapter 1 for more information on the description of the project.

9. **Surrounding Land Uses and Setting.** Surrounding land uses include light industrial and Public/Quasi Public to the south and east of Pond A18, and open space, parklands and habitat directly adjacent to all other sides of the levee.

10. **Other public agencies whose approval is required.** See Section 1.9 of this document for other public agencies whose approval is required.

11. **Have California Native American tribes traditionally and culturally affiliated with the project area requested consultation pursuant to Public Resources Code section 21080.3.1? If so, has consultation begun?** The City sent letters to six Native American individuals and organizations on July 26, 2017 requesting an opportunity to consult on the Capital Improvements Project, which included improvements to water systems. No responses were received.

2.1 Environmental Factors Potentially Affected

The environmental factors checked below would be potentially affected by this project, involving at least one impact that is a "Potentially Significant Impact" as indicated by the checklist on the following pages.

- ☐ Aesthetics
- ☒ Biological Resources
- ☐ Greenhouse Gas Emissions
- ☐ Land Use/Planning
- ☐ Population/Housing
- ☐ Transportation/Traffic
- ☐ Agriculture and Forestry Resources
- ☒ Cultural Resources
- ☒ Hazards & Hazardous Materials
- ☐ Mineral Resources
- ☐ Public Services
- ☒ Tribal Cultural Resources
- ☐ Air Quality
- ☐ Geology/Soils
- ☒ Hydrology/Water Quality
- ☐ Noise
- ☐ Recreation
- ☐ Utilities/Service Systems
- ☒ Mandatory Findings of Significance

2.2 Environmental Checklist

2.2.1 Aesthetics

Issues (and Supporting Information Sources):	Potentially Significant Impact	Less Than Significant with Mitigation Incorporated	Less Than Significant Impact	No Impact
1. AESTHETICS — Would the project:				
a) Have a substantial adverse effect on a scenic vista?	☐	☐	☒	☐
b) Substantially damage scenic resources, including, but not limited to, trees, rock outcroppings, and historic buildings within a state scenic highway?	☐	☐	☐	☒
c) Substantially degrade the existing visual character or quality of the site and its surroundings?	☐	☐	☒	☐
d) Create a new source of substantial light or glare which would adversely affect daytime or nighttime views in the area?	☐	☐	☐	☒

Setting

The San José-Santa Clara Regional Wastewater Facility's (RWF or Facility) Pond A18 South Gate Levee Repair Project (proposed Project) area is located near the southern tip of the San Francisco Bay and northwest of the existing RWF (see Figure 1-1). The Project area sits on top of the existing levee road and is bounded by Pond A18 to the east and the Artesian Slough to the west. The Project area and vicinity is relatively flat, allowing for views from nearby offsite areas of the eastern foothills, Mount Hamilton, and the Diablo Mountains to the east, and the San Francisco Baylands to the north from elevated locations.

There are no public roadways in the immediate vicinity of the Project area. The levee road is used only by the RWF staff for maintenance access.

The Don Edwards San Francisco Bay National Wildlife Refuge (Refuge) Environmental Education Center is located approximately 0.13 miles (686.4 feet) from the Project site. The Mallard Slough Trail, the New Chicago Marsh Trail, and the Marsh View Trail are all located near the Refuge's Environmental Education Center. The Mallard Slough Trail runs on the opposite side of the Artesian Slough[3] west of the Project area.[4] These trails are the primary location from which the Pond A18 South Gate levee can be seen. During the 1-month construction period, views of the Project area by recreationists and other visitors may be affected by the construction equipment, however; these altered views would be temporary in nature and no view obstruction would occur past the construction phase.

The nearest residences within the Project area vicinity are located in the Alviso Village area, which is approximately 0.75 miles (3,960 feet) southwest of the Project area.

[3] Mallard Slough and Artesian Slough are alternative names for the same body of water. The latter is more commonly used in current maps and documents, but the Refuge uses the older name for the trail itself.

[4] U.S. Fish & Wildlife Service, 2013. Don Edwards San Francisco Bay National Wildlife Refuge Trail Guide. July 2013.

Discussion

a, c) **Less than Significant Impact.** The proposed levee repairs would be limited in extent, with no additional height being added to the levee's current elevation of 11 to 12.5 feet NAVD88. The levee repair would return that feature to its pre-erosion width. In addition, the proposed Project does not include the construction of new facilities and thus would not alter the existing character of the site. Visitors to the Don Edwards San Francisco Bay National Wildlife Refuge Environmental Education Center and recreationists using the nearby trails may see and note the construction equipment during the construction period. However, these views would be temporary in nature and limited to the month-long construction period. Therefore, the proposed levee repairs would be consistent with the existing visual setting, would not result in a substantial adverse effect on any scenic vista, and would not substantially alter the existing visual character or quality of the Project area and its surroundings. These impacts are considered less than significant.

b) **No Impact.** The Project area is not visible from any state scenic highways. Additionally, no rock outcroppings or historic buildings are located on site or in the immediate vicinity of the Project area, such that views of such resources could be affected. No trees are located within the Project area. Thus, no impact is expected to occur.

d) **No Impact.** Nighttime lighting is not proposed under the project and daytime lighting would be unchanged relative to the current condition. The City of San José Public Streetlights Council Policy 4-2 requires that new streetlight lighting be dimmable and programmable and fully shielded/downward facing lights, which controls the amount and color of lighting shining on streets and sidewalks. However, because the proposed Project would not include any new lighting, this policy is not relevant to the proposed Project. Further, because that are no residences or other active nighttime uses in the immediate vicinity of the proposed Project, there would be no lighting- or glare-related impacts which would adversely affect daytime or nighttime views in the area.

2.2.2 Agricultural and Forest Resources

Issues (and Supporting Information Sources):	Potentially Significant Impact	Less Than Significant with Mitigation Incorporated	Less Than Significant Impact	No Impact
2. AGRICULTURAL AND FOREST RESOURCES — In determining whether impacts to agricultural resources are significant environmental effects, lead agencies may refer to the California Agricultural Land Evaluation and Site Assessment Model (1997) prepared by the California Department of Conservation as an optional model to use in assessing impacts on agriculture and farmland. In determining whether impacts to forest resources, including timberland, are significant environmental effects, lead agencies may refer to information compiled by the California Department of Forestry and Fire Protection regarding the state's inventory of forest land, including the Forest and Range Assessment Project and the Forest Legacy Assessment project; and forest carbon measurement methodology provided in Forest Protocols adopted by the California Air Resources Board. **Would the project:**				
a) Convert Prime Farmland, Unique Farmland, or Farmland of Statewide Importance (Farmland), as shown on the maps prepared pursuant to the Farmland Mapping and Monitoring Program of the California Resources Agency, to non-agricultural use?	☐	☐	☐	☒
b) Conflict with existing zoning for agricultural use, or a Williamson Act contract?	☐	☐	☒	☐
c) Conflict with existing zoning for, or cause rezoning of, forest land (as defined in Public Resources Code section 12220(g)), timberland (as defined by Public Resources Code section 4526), or timberland zoned Timberland Production (as defined by Government Code section 51104(g))?	☐	☐	☐	☒
d) Result in the loss of forest land or conversion of forest land to non-forest use?	☐	☐	☐	☒
e) Involve other changes in the existing environment which, due to their location or nature, could result in conversion of Farmland, to non-agricultural use or conversion of forest land to non-forest use?	☐	☐	☐	☒

Setting

No Prime Farmland, Farmland of Statewide Importance, Unique Farmland, or Farmland of Local Importance are in the Project area.[5] However, Pond A18, located adjacent to the Project area, is under a Williamson Act contract and is designated as Non-Prime Agricultural Land by the California Department of Conservation. No other lands in the immediate Project vicinity are enrolled in the Williamson Act Program.[6]

Discussion

a) **No Impact.** As noted above, the Project site is not located on, and would not convert any Prime Farmland, Unique Farmland, or Farmland of Statewide Importance to non-agricultural uses. Thus, no impact is expected to occur.

[5] California Department of Conservation (CDC), Division of Land Resource Protection, 2016. Santa Clara County Important Farmland, 2014. Available online at ftp://ftp.consrv.ca.gov/pub/dlrp/FMMP/pdf/2014/scl14.pdf. Accessed April 10, 2017.

[6] California Department of Conservation (CDC), 2009. Division of Land Resource Protection, Santa Clara County Williamson Act Lands 2009 – Lands Enrolled in Williamson Act and Farmland Security Zone Contracts as of 2009 [GIS data], Williamson Act Program. Available online at ftp://ftp.consrv.ca.gov/pub/dlrp/wa/SantaClara_15_16_WA.pdf. Accessed April 10, 2017.

b) **Less than Significant Impact.** Pond A18, which is adjacent to the proposed Project site is designated under a Williamson Act contract as Non-Prime Agricultural Land. Non-Prime Agricultural Land is Open Space Land of Statewide Significance as defined under the California Open Space Subvention Act. However, the proposed Project would not result in the construction of any new facilities or other displacement, interference, or loss of agricultural lands, or land under the Williamson Act. Additionally, the proposed Project would not alter other areas which could, directly or indirectly, result in the conversion of farmland or land under a Williamson Act contract.

c) **No Impact.** The Project area is zoned as agricultural land by the San José Zoning Ordinance.[7] The proposed Project does not conflict with existing zoning for, and would not cause rezoning of forest land, timberland, or timberland zoned as Timberland Production.

d) **No Impact.** As stated above, the Project area is zoned as agricultural land, and would not result in the loss of forest land or conversion of forest land to non-forest use. There would be no impact.

e) **No Impact.** The proposed Project would not involve other changes in the existing environment which, due to their location or nature, could result in conversion of Farmland to non-agriculture use of conversion of forest land to non-forest use (refer to discussions under items a) and c), above).

---

[7] City of San José, Code of Ordinances, Title 20- Zoning, 20.10.060- Zoning Districts Established.

2.2.3 Air Quality

Issues (and Supporting Information Sources):	Potentially Significant Impact	Less Than Significant with Mitigation Incorporated	Less Than Significant Impact	No Impact
3. AIR QUALITY — Where available, the significance criteria established by the applicable air quality management or air pollution control district may be relied upon to make the following determinations. **Would the project:**				
a) Conflict with or obstruct implementation of the applicable air quality plan?	☐	☐	☒	☐
b) Violate any air quality standard or contribute substantially to an existing or projected air quality violation?	☐	☐	☒	☐
c) Result in a cumulatively considerable net increase of any criteria pollutant for which the project region is non-attainment under an applicable federal or state ambient air quality standard (including releasing emissions which exceed quantitative thresholds for ozone precursors)?	☐	☐	☒	☐
d) Expose sensitive receptors to substantial pollutant concentrations?	☐	☐	☒	☐
e) Create objectionable odors affecting a substantial number of people?	☐	☐	☒	☐

Setting

Under amendments to the federal Clean Air Act (CAA), the U.S. Environmental Protection Agency (USEPA) has classified air basins or portions thereof as either "attainment" or "non-attainment" for each criteria air pollutant, based on whether or not the national standards have been achieved. The California CAA, which is patterned after the federal CAA, also requires areas to be designated as "attainment" or "non-attainment" for the state standards. Thus, areas in California have two sets of attainment / non-attainment designations: one set with respect to the national standards and one set with respect to the state standards. The San Francisco Bay Area Air Basin (Bay Area) is currently designated as a nonattainment area for state 1-hour and 8-hour ozone standards, the national eight-hour ozone standard, state particulate matter (PM_{10} and $PM_{2.5}$) standards, and national $PM_{2.5}$ (24-hour) standard.

The BAAQMD is the regional air quality authority in the Bay Area. The most recently adopted air quality plan for the San Francisco Bay Area is the *2017 Clean Air Plan*.[8] The 2017 Clean Air Plan (CAP) is an update to the 2010 Clean Air Plan to comply with State air quality planning requirements. The 2017 CAP also serves as a multi-pollutant air quality plan to protect public health and the climate. The 2017 CAP control strategy includes revised, updated, and new measures in the following economic sectors: stationary sources, transportation, energy, buildings, agriculture, natural and working lands, waste management, water, and super-GHG pollutants.

The BAAQMD *CEQA Air Quality Guidelines* were adopted in 2010 and amended in 2011 and again in 2017 to assist in the evaluation of air quality impacts of projects and plans proposed

[8] Bay Area Air Quality Management District (BAAQMD), 2017. Final 2017 Clean Air Plan, adopted April 19, 2017. Available at http://www.baaqmd.gov/plans-and-climate/air-quality-plans/current-plans.

within the Bay Area. The guidelines provide recommended procedures for evaluating potential air impacts during the environmental review process, consistent with CEQA requirements, and include recommended thresholds of significance, mitigation measures, and background air quality information. They also include recommended assessment methodologies for air toxics, odors, and greenhouse gas emissions.

In 2012, the Alameda County Superior Court ruled that the BAAQMD had failed to comply with CEQA when it adopted the thresholds of significance in the BAAQMD *CEQA Air Quality Guidelines*. On August 13, 2013, the First District Court of Appeal ordered the trial court to reverse the judgment and upheld the BAAQMD's CEQA thresholds (*California Building Industry Association v. Bay Area Air Quality Management District*, Case No. A135335 & A136212 [Court of Appeal, First District, August 13, 2013]).

The California Supreme Court granted review of the appeal, but only to address whether or not CEQA requires an analysis of how existing environmental conditions will impact future residents or users of a proposed project and did not review or address the adequacy of specific thresholds adopted by the BAAQMD in 2011. On December 17, 2015, the Supreme Court concluded that agencies subject to CEQA generally are not required to analyze the impact of existing environmental conditions on a project's future users or residents, reversing the Court of Appeal's judgment on that issue. The case was the remanded back to the Court of Appeal on August 12, 2016 which concluded that "the challenged thresholds are not invalid on their face, but may not be used for the primary purpose envisioned by District, namely, to routinely assess the effect of existing environmental conditions on future users or occupants of a project" (CBIA v. BAAQMD [2016] 1 Cal.App.5th 715)

Although reliance on the 2017 thresholds is not required, local agencies still have a duty to evaluate impacts related to air quality and GHG emissions. In addition, CEQA grants local agencies broad discretion to develop their own thresholds of significance, or to rely on thresholds previously adopted or recommended by other public agencies or experts so long as they are supported by substantial evidence. Accordingly, this analysis is based on the BAAQMD's 2017 thresholds to evaluate Project impacts in order to protectively evaluate the potential effects of the proposed Project on air quality. Despite the court ruling, the science and reasoning contained in the BAAQMD 2017 *CEQA Air Quality Guidelines* provide the latest state-of-the-art guidance available. For that reason, substantial evidence supports continued use of the BAAQMD 2017 *CEQA Air Quality Guidelines*.

For the purposes of this air quality analysis, sensitive receptors are defined as facilities and land uses that include members of the population that are particularly sensitive to the effects of air pollutants, such as children, the elderly, and people with illnesses. Examples include schools, hospitals, and daycare centers. Residential areas are also considered sensitive to poor air quality because people usually stay home for extended periods of time, which results in greater exposure to ambient air quality. There are no sensitive receptors (e.g., residences, schools) in the immediate vicinity of the Project area. The closest residences are located along Spreckle Avenue, approximately 0.75 miles southwest of the Project area. There are no hospitals, schools, daycare centers, or long-term care facilities within 1 mile of the Project area. The George Mayne

Elementary School, where children frequently engage in outdoor activities, is located approximately 1.2 miles southwest of the proposed Project.

Discussion

a) **Less than Significant.** For air quality plan consistency determinations, the BAAQMD recommends that agencies analyze the project with respect to the following questions: (1) does the project support the primary goals of the air quality plan; (2) does the project include applicable control measures from the air quality plan; and (3) does the project not disrupt or hinder implementation of any 2017 CAP control measures? If all the questions are concluded in the affirmative, BAAQMD considers the project consistent with air quality plans prepared for the Bay Area.[9] Any project that would not support the 2017 CAP goals would not be considered consistent with the 2017 CAP, and if approval of the project would not result in significant and unavoidable air quality impacts after the application of mitigation, then the project would be considered consistent with the 2017 CAP.

As presented in the subsequent impact discussions, proposed Project-related construction would not exceed the identified guidelines or thresholds; therefore, the proposed Project would support the primary goals of the 2017 CAP. As mentioned above, projects that incorporate all feasible air quality plan control measures are considered consistent with the 2017 CAP. There appear to be no 2017 CAP control measures that would be directly applicable to the proposed Project. However, implementation of BAAQMD Basic Construction Measures as best management practices is required by the City as part of the project conditions of approval.

The proposed Project would support the primary goals of the 2017 10 CAP and it would not disrupt or hinder implementation of any 2017 CAP control measures. Therefore, there would be no impact associated with conflicting or obstructing implementation of the applicable air quality plan.

BAAQMD Basic Construction Measures would ensure that the proposed Project would comply with applicable BAAQMD requirements for control of construction period emissions, and ensure that potential air emissions impacts would be reduced to less than significant levels.

BAAQMD Basic Construction Measures

During Project construction, the City, through its construction contractor(s), shall ensure that the following BAAQMD construction control measures are implemented.

1. All exposed surfaces (e.g., parking areas, staging areas, soil piles, graded areas, and unpaved access roads) shall be watered two times per day.

2. All haul trucks transporting soil, sand, or other loose material off-site shall be covered.

[9] Bay Area Air Quality Management District (BAAQMD), 2017. *CEQA Air Quality Guidelines*, revised May 2017.

3. All visible mud or dirt track-out onto adjacent public roads shall be removed using wet power vacuum street sweepers at least once per day. The use of dry power sweeping is prohibited.

4. All vehicle speeds on unpaved roads shall be limited to 15 mph.

5. Idling times shall be minimized either by shutting equipment off when not in use or reducing the maximum idling time to 5 minutes (as required by the California airborne toxics control measure Title 13, Section 2485 of California Code of Regulations [CCR]). Clear signage shall be provided for construction workers at all access points.

6. All construction equipment shall be maintained and properly tuned in accordance with manufacturer's specifications. All equipment shall be checked by a certified mechanic and determined to be running in proper condition prior to operation.

7. Post a publicly visible sign with the telephone number and person to contact at the Lead Agency regarding dust complaints. This person shall respond and take corrective action within 48 hours. The Air District's phone number shall also be visible to ensure compliance with applicable regulations.

b) **Less than Significant.** Project-related air quality impacts fall into two categories: short-term impacts due to construction, and long-term impacts due to operation. First, during project construction (short-term), the proposed Project would affect local particulate concentrations primarily due to fugitive dust sources and equipment exhaust. Particulate matter emissions include particulate matter of 10 microns in diameter or less (PM_{10}) and particulate matter of 2.5 microns in diameter or less ($PM_{2.5}$). Construction equipment exhaust (including both off-road equipment and on-road trucks) would also produce emissions of ozone precursors, including reactive organic gas (ROG) and nitrogen oxides (NO_X). Under operations (long-term), there would be no emissions, because there would be no new operations associated with the proposed Project. As discussed below, with implementation of BAAQMD Basic Construction Measures (listed above), which are required by the City as part of the project conditions of approval, construction and operation of the Project would not result in a violation of an air quality standard or contribute significantly to an existing or projected air quality violation.

Construction

Criteria pollutant and precursor exhaust emissions of reactive organic gases (ROG), nitrogen oxides (NOx), respirable particulate matter (PM_{10}), and fine particulate matter ($PM_{2.5}$) from construction equipment and vehicles would incrementally add to the regional atmospheric loading of these pollutants during construction of the proposed Project. Impacts related to the proposed Project contributing to an existing or projected air quality violation are judged by comparing estimated direct and indirect proposed Project exhaust emissions to the significance thresholds, which for short-term construction emissions are 54 pounds per day for ROG, NOx, and $PM_{2.5}$; and 82 pounds

per day for PM_{10}.[10] Only the exhaust portion of $PM_{2.5}$ and PM_{10} emissions are compared against the construction thresholds.

BAAQMD recommends that analyses focus on implementation of dust control measures rather than comparing estimated levels of fugitive dust to a quantitative significance threshold. BAAQMD considers implementation of BAAQMD-recommended basic measures for fugitive dust sufficient to ensure that construction-related fugitive dust is reduced to a less-than-significant level. The City has standard permit conditions designed to reduce environmental impacts of projects. For relatively small projects, such as the proposed Project, the City and/or its construction contractor(s) are required by the BAAQMD to implement the BAAQMD's basic construction measures. Implementation of these BAAQMD recommended measures are required by the City as part of the project conditions of approval. With implementation of these measures, dust-related construction impacts would be reduced to less than significant.

Construction-related exhaust emissions were estimated using the California Emissions Estimator Model (CalEEMod) version 2016.3.1 for construction activities associated with the proposed Project. Project construction would occur in October and November 2017 over a period of up to 30 days, though actual construction is planned to occur on 16-20 of those days. The construction phasing schedule and equipment fleet was provided by the project applicant. Approximately 100 cubic yards of backfill material would be required at the site, requiring 10 total roundtrip truck trips to deliver this material. An additional 10 total roundtrip truck trips would be required to deliver the sheet piles to the staging area, and another 80 truck trips would be required to carry the sheet piles from the staging area to the Project site. There would also be heavy-duty trucks and light-duty pickup trucks operating onsite at the Project site. Additional assumptions and information are included in Appendix A.

As depicted in **Table 2-1**, construction-related exhaust emissions would be less than significant. However, in order to comply with BAAQMD requirements for fugitive dust emissions, implementation of BAAQMD Basic Construction Measures (listed above) would be required.

Operation

New operations associated with the proposed Project is limited to routine vehicle use by staff to complete approximately a once a month visual inspection of the levee. As such, operational emissions would be minimal and, therefore, the proposed Project would not be expected to contribute to air quality violations and associated operational impacts would be less than significant.

[10] Bay Area Air Quality Management District (BAAQMD), 2017. *CEQA Air Quality Guidelines*, revised May 2017. Available at http://www.baaqmd.gov/~/media/files/planning-and-research/ceqa/ceqa_guidelines_may2017-pdf.pdf?la=en.

TABLE 2-1
AVERAGE DAILY UNMITIGATED CONSTRUCTION-RELATED EMISSIONS (POUNDS/DAY)[A]

Emissions Source	ROG	NOx	Exhaust PM_{10}[b]	Exhaust $PM_{2.5}$[b]
Off-Road Equipment	2.9	22.5	1.4	1.4
Haul Trucks	<0.1	0.9	<0.1	<0.1
Onsite Trucks	<0.1	0.7	<0.1	<0.1
Truck Idling	<0.1	0.7	<0.1	<0.1
Worker Commutes	<0.1	<0.1	<0.1	<0.1
Total	**3.1**	**24.8**	**1.4**	**1.4**
BAAQMD Construction Threshold	54	54	82	54
Significant Impact?	No	No	No	No

[a] Emissions were modeled using CalEEMod version 2016.3.1 and represent average daily emissions throughout the entire construction period. Additional information is included in Appendix A.
[b] BAAQMD's proposed construction-related significance thresholds for PM10 and PM2.5 apply to exhaust emissions only and not to fugitive dust.

c) **Less than Significant.** Based on BAAQMD guidance, if a project would result in an increase in ROG, NOx, PM_{10}, or $PM_{2.5}$ of more than its respective daily mass thresholds, then it would also be considered to contribute considerably to a significant cumulative impact. In developing thresholds of significance for air pollutants, BAAQMD has considered the emission levels for which a project's individual emissions would be cumulatively considerable. Therefore, if a project would exceed the identified significance thresholds, its emissions would be cumulatively considerable, and if a project would not exceed the significance thresholds, its emissions would not be cumulatively considerable.

With implementation of the BAAQMD Basic Construction Measures, as discussed for Criteria "a" and "b" above, emissions of Project-related criteria pollutants associated with short-term construction (unmitigated) would be reduced to less than significant levels. Because the proposed Project would result in very low emissions from vehicle use by staff for approximately a once a month visual inspection and no other operations, long-term operational emissions would be less than the identified significance thresholds and would not be considered to result in a significant contribution to existing air quality violations (see discussion for Criterion "b" above). Therefore, with implementation of the BAAQMD Basic Construction Measures, the impact associated with short-term and long-term increases in criteria pollutant emissions from operations of the proposed Project would not be cumulatively considerable, and associated impacts would be less than significant.

d) **Less than Significant.** Long-term operational-related emissions associated with the proposed Project would be limited to vehicle use by staff for visual inspections approximately once per month and no other operational activities. Long-term operations-related impacts associated with exposure of sensitive receptors to substantial pollutant concentrations would therefore be less than significant.

Construction activities would generate air pollutant emissions, including diesel particulate matter (DPM) associated with off-road equipment and on-road heavy-duty truck exhaust emissions. Construction activities would occur over a period of approximately 16 working days, thereby resulting in limited emissions, and construction emissions would be limited in intensity during the duration of construction, as discussed under checklist item b, above.

In addition, the closest sensitive receptors to the Project area are residences located at a distance of approximately 0.75 miles southwest. BAAQMD considers the relevant zone of influence for an assessment of air quality health risks to be within 1,000 feet (approximately 0.2 miles) of a project site.[11] Additionally a summary of research findings in CARB's Land Use Compatibility Handbook[12] recommends avoiding siting sensitive land uses within 1,000 feet of a distribution center and major rail yard, which supports the use of a 1,000 feet evaluation distance in case such sources may be relevant to a particular project setting. Therefore, Project-related construction emissions would be sufficiently distant from the nearest sensitive receptor locations to avoid localized health risk and hazard impacts. Short-term construction-related impacts associated with the proposed Project exposing sensitive receptors to substantial pollutant concentrations would therefore be less than significant. However, in order to comply with BAAQMD requirements and the City as part of the project conditions of approval, implementation of the BAAQMD Basic Construction Measures would be required. With implementation of these measures, DPM emissions from construction activities would be reduced further, and exposure to sensitive receptors and associated impacts would also be reduced. With implementation of these measures, short-term construction-related impacts associated with the proposed Project exposing sensitive receptors to substantial pollutant concentrations would be less than significant.

e) **Less than Significant Impact.** Odors are typically associated with industrial projects involving the use of chemicals, solvents, petroleum products, and other strong-smelling elements used in manufacturing processes. Odors are also associated with such uses as sewage treatment facilities and landfills. New operations associated with the proposed Project would be limited to vehicle use by staff for visual inspections approximately once a month Thus, the proposed Project operation is not expected to create objectionable odors. Activities and materials associated with construction would be typical of construction projects of similar type and size. Any odors generated during construction of the proposed Project would be localized and would not be sufficient to affect a substantial number of people. Therefore, proposed Project construction activities would not create objectionable odors. Consequently, the odor impact associated with the proposed Project would be less than significant.

---

11 Bay Area Air Quality Management District (BAAQMD), 2017. *CEQA Air Quality Guidelines*, revised May 2017. Available at http://www.baaqmd.gov/~/media/files/planning-and-research/ceqa/ceqa_guidelines_may2017-pdf.pdf?la=en.

12 California Air Resources Board (CARB), 2005. *Land Use Compatibility Handbook.*

2.2.4 Biological Resources

Issues (and Supporting Information Sources):	*Potentially Significant Impact*	*Less Than Significant with Mitigation Incorporated*	*Less Than Significant Impact*	*No Impact*
4. BIOLOGICAL RESOURCES — Would the project:				
a) Have a substantial adverse effect, either directly or through habitat modifications, on any species identified as a candidate, sensitive, or special-status species in local or regional plans, policies, or regulations, or by the California Department of Fish and Game or U.S. Fish and Wildlife Service?	☐	☒	☐	☐
b) Have a substantial adverse effect on any riparian habitat or other sensitive natural community identified in local or regional plans, policies, regulations, or by the California Department of Fish and Game or U.S. Fish and Wildlife Service?	☐	☐	☒	☐
c) Have a substantial adverse effect on federally protected wetlands as defined by Section 404 of the Clean Water Act (including, but not limited to, marsh, vernal pool, coastal, etc.) through direct removal, filling, hydrological interruption, or other means?	☐	☒	☐	☐
d) Interfere substantially with the movement of any native resident or migratory fish or wildlife species or with established native resident or migratory wildlife corridors, or impede the use of native wildlife nursery sites?	☐	☐	☒	☐
e) Conflict with any local policies or ordinances protecting biological resources, such as a tree preservation policy or ordinance?	☐	☐	☐	☒
f) Conflict with the provisions of an adopted Habitat Conservation Plan, Natural Community Conservation Plan, or other approved local, regional, or state habitat conservation plan?	☐	☐	☐	☒

Introduction

This analysis is based on results of the following data gathering efforts: (1) reviewed available biological resource surveys and relevant biological literature of the Project site and surrounding vicinity; (2) reviewed special-status species lists derived from the U.S. Fish and Wildlife Service (USFWS), the California Department of Fish and Wildlife (CDFW), and the California Native Plant Society (CNPS); and (3) a field reconnaissance of the Project site conducted on February 23, 2017 to record current conditions. Biological resources identified in the project area are shown in **Figure 2-1**.

This section of this document includes two different terms to describe the area around the South Gate and the biological resources located near it. The “study area” is the area investigated in the reconnaissance-level biological surveys and the jurisdictional wetland delineation. It is a larger area than that in which the Project activities would take place. The second term “Project site” includes the South Gate Structure and the open water, vegetation, and levee sections immediately adjacent to it. These are the areas in which direct, indirect, or cumulative effects could occur to aquatic or terrestrial biological resources as a result of the Project (Figure 2-1).

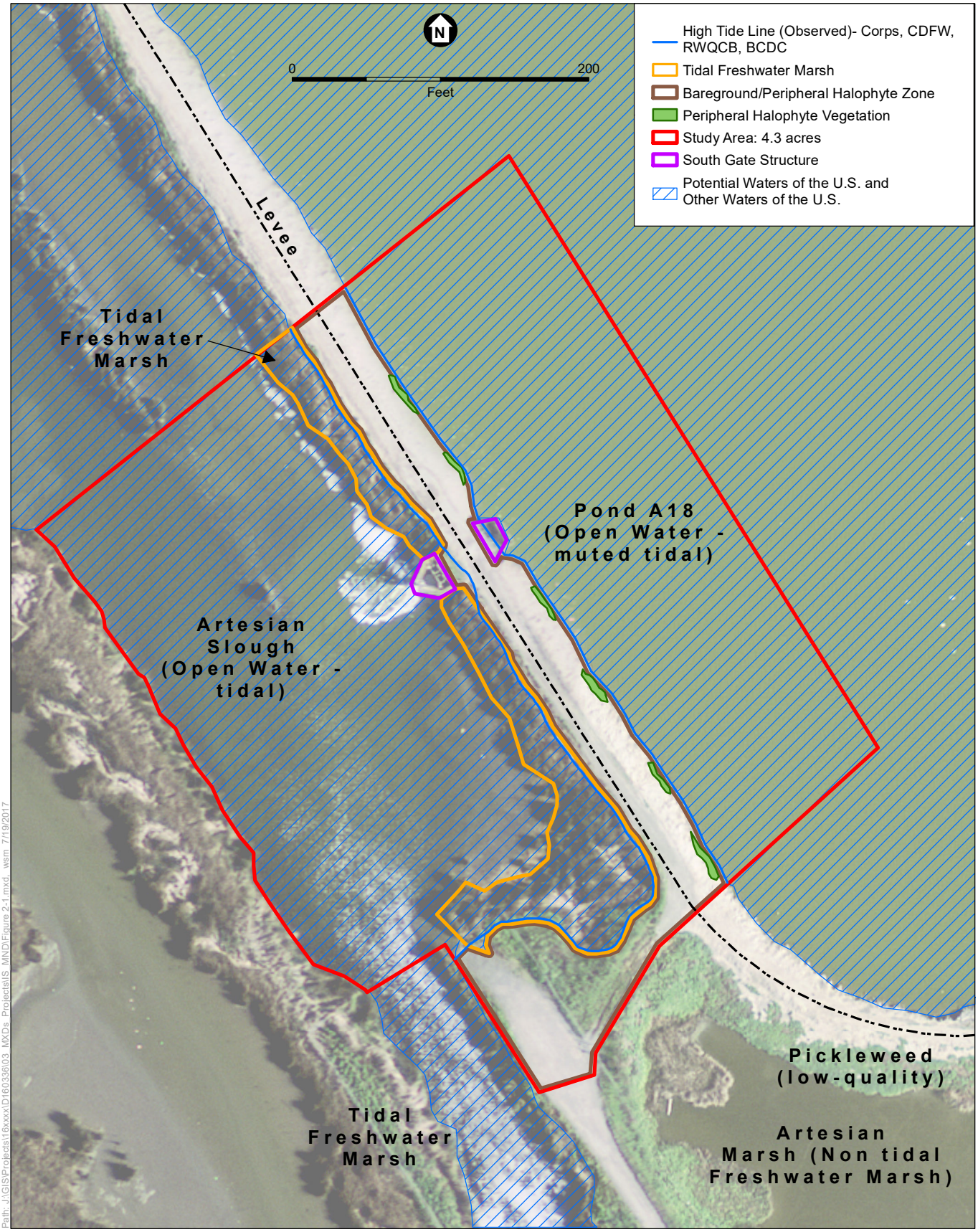

Path: J:\GIS\Projects\16xxxx\D160336\03_MXDs_Projects\IS_MND\Figure 2-1.mxd, wsm 7/19/2017

SOURCE: USGS NED 1/9 arc-second DEM (3 meter resolution), 2013; ESA, 2017

Pond A18 South Gate Levee Repair Project

Figure 2-1
Vegetation Communities and Habitat Types

ESA

Previous Biological Resources Surveys and Relevant Biological Literature

Project sites in the vicinity of the San José-Santa Clara Regional Wastewater Facility (RWF) and the study area have been previously surveyed for biological resources, including special-status wildlife and flora, waters of the United States (U.S.) and of the State, and other sensitive natural communities. No focused special-status wildlife or plant surveys were performed for this Project analysis, but a reconnaissance-level biological survey and a delineation of jurisdictional wetlands and other waters of the U.S. were performed for this Project.

The following documents were reviewed and are referenced to support the analysis of potential environmental impacts of the Project:

- San José-Santa Clara Water Pollution Control Plant Master Plan EIR and Existing Conditions Report[13] (ESA, 2012)
- San José-Santa Clara Regional Wastewater Facility Emergency Generators Project Initial Study[14]
- San José-Santa Clara Regional Wastewater Facility Iron Salt Feed Station Project Initial Study[15]
- Santa Clara Valley Habitat Plan[16]

Special-Status Species

Special-status species lists were derived from the USFWS, CDFW, and CNPS for the Milpitas, Mountain View, Calaveras Reservoir, Newark, Niles, La Costa Valley, Cupertino, San José East, and San José West 7.5-minute U.S. Geological Survey (USGS) quadrangles. The primary sources of data referenced in support of this analysis are as follows:

- USFWS, List of threatened and endangered species that may occur in the proposed Project location, and/or may be affected by the Pond A18 South Gate Levee Repair Project[17]
- National Marine Fisheries Service (NMFS) West Coast Region – California Intersection of Milpitas USGS 7.5" Topographic Quadrangle with NOAA Fisheries ESA Listed Species
- CNDDB, Rarefind 5 computer program: Federal Endangered and Threatened Species that May Be Affected by Projects in the Milpitas, Mountain View, Calaveras Reservoir, Newark, Niles, La Costa Valley, Cupertino, San Jose East, and San Jose West, California, U.S. Geological Survey 7.5-minute topographic quadrangles[18]

---

13 City of San José. 2013. San José-Santa Clara Regional Wastewater Facility Plant Master Plan EIR. Prepared by Environmental Science Associates.

14 City of San José. 2014. San José-Santa Clara Regional Wastewater Facility Emergency Generators Project Initial Study Prepared by Environmental Science Associates. January.

15 City of San José. 2015. San José-Santa Clara Regional Wastewater Facility Iron Salt Feed Station Project Initial Study. Prepared by Environmental Science Associates.

16 ICF International. 2012. Santa Clara Valley Habitat Plan. Prepared for City of Gilroy, City of Morgan Hill, County of Santa Clara, Santa Clara Valley Transportation Agency, Santa Clara Valley Water District. August.

17 U.S. Fish and Wildlife (USFWS), 2017. List of threatened and endangered species that may occur in the proposed project location, and/or may be affected by San Jose RWF Pond A-18 Levee Repair Project. April 11, 2017.

18 California Department of Fish and Wildlife (CDFW), 2017. California Natural Diversity Data Base (CNDDB). Federal Endangered and Threatened Species that May Be Affected by Projects in the Milpitas, Mountain View, Calaveras Reservoir, Newark, Niles, La Costa Valley, Cupertino, San Jose East, and San Jose West, California, U.S. Geological Survey 7.5-minute topographic quadrangles. *Rarefind 5*. Accessed April 10, 2017.

- Special Vascular Plants, Bryophytes, and Lichens List[19]
- Special Animals List[20]
- CNPS, Online Inventory of Rare and Endangered Plants[21]

Reconnaissance Survey

Biological resources within the study area were verified by ESA biologists during field reconnaissance survey conducted on February 23, 2017. Prior to the reconnaissance survey, databases were reviewed for the study area and surrounding vicinity. The field reconnaissance consisted of a pedestrian survey along the levee separating Pond A18 from Artesian Slough where ESA biologists documented observations of the immediate and adjacent environments. The field surveys focused on identifying habitat for special-status plant and animal species. General habitat conditions were noted and incidental species observations were recorded.

The findings of the reconnaissance surveys, the literature review, and the database queries were used to compile the list of special-status species that may occur at the Project site (Appendix B and **Table 2-2**, discussed in detail below) and to characterize the local Project setting.

Setting

Regional Setting

The Project is located in the Bay Area–Delta Bioregion, as defined by the State of California's Natural Communities Conservation Program. This bioregion consists of a variety of natural communities that range from the open waters of San Francisco Bay and Delta to salt and brackish marshes to grassland, chaparral, and oak woodlands. The temperate climate is Mediterranean, with relatively mild, wet winters and warm, dry summers. The high diversity of vegetation and wildlife in the region is a result of soil, topographic, and microclimate variations, which combine to promote relatively high levels of endemism. This, in combination with a long history of uses that have altered the natural environment and the increasingly rapid pace of development in the region, has endangered some of the local flora and fauna.

The San Francisco Bay-Delta is the second-largest estuary in the United States and supports numerous aquatic habitats and biological communities. It encompasses 479 square miles and includes shallow mudflats, tidal marshes, and open waters. The San Francisco Bay-Delta is an important wintering and migratory stopover site on the Pacific Flyway. More than 300,000 wintering waterfowl use the region.

Local Project Setting

The Project site is located on the eastern side of Artesian Slough, a tributary to Coyote Creek near the City of San José (City), California. Pond A18 is located north of and adjacent to the RWF.

---

19 CDFW, 2017b. California Department of Fish and Wildlife, Natural Diversity Database. April 2017. Special Animals List. Periodic publication. 51 pp.

20 CDFW, 2017c. California Department of Fish and Wildlife, Natural Diversity Database. April 2017. Special Vascular Plants, Bryophytes, and Lichens List. Quarterly publication. 126 pp.

21 California Native Plant Society (CNPS), 2017. California Native Plant Society, Rare Plant Program. 2017. Inventory of Rare and Endangered Plants of California (online edition, v8-03 0.39). Website http://www.rareplants.cnps.org [accessed 11 April 2017].

The Project is located on and adjacent to a levee in the southern portion of San Francisco Bay and associated salt marsh, freshwater marsh, and mudflat habitats. Land use surrounding the Project site includes other RWF operations and undeveloped open space managed by the RWF and others. The Project includes the repair of the levee around the South Gate Structure on Pond A18 levee (Figures 1-1 through 1-4).

As described in Chapter 1, Pond A18 is separated from tidal flows of the San Francisco Bay by a levee and two tide gates, the North Gate and the South Gate. The tide gates are operated by the RWF under existing waste discharge permits from the San Francisco Bay Regional Water Quality Control Board (RWQCB). Despite ongoing maintenance, the portion of the levee immediately adjacent to the South Gate Structure has undergone increasingly rapid deterioration in recent months due to a series of strong storm events. A recently conducted condition assessment classified its condition as "critical" due to formation of scour holes and levee embankment settlement and erosion on all four sides of the gate structure. Continued erosion of the levee will threaten the stability of the levee, impede access for RWF staff to continue to operate both gate structures, restrict vehicle access for levee inspections, and may result in a full levee breach.

A levee breach at the South Gate would cause uncontrolled flows of water out of Pond A18, which would pose a flood risk and would impair the ability of the RWF to maintain water quality, which would result in a violation of the RWQCB discharge permit.

Vegetation Communities and Habitat Types

Vegetation communities are assemblages of plant species that occur together in the same area, which are defined by species composition and relative abundance. There are three vegetation communities present within the study area: open water, tidal freshwater marsh, and bareground/peripheral halophyte zone.

Open Water

Pond A18 is open water habitat separated from tidal flows of the San Francisco Bay by a levee and two tide gates, one to the north and one to the south. Open water in Pond A18 is considered *Lacustrine-Limnetic* according to the Cowardin classification system.[22] The area mapped as a managed pond is at a low point in the study area (between 4 and 5 feet NAVD88), is almost entirely unvegetated, and in inundated for the entire year. Pond A18, originally created for salt production and harvesting, is currently inactive as a salt pond; however, the pond is still managed in order to achieve specific salinity and hydrologic circulation regimes.[23] Salinity data indicate that the range of brackish salinities in the pond vary by season, from less than 10 parts per thousand (ppt) in the wet season to 25 ppt in the dry season.[24] Open water is predominantly inundated by direct rainfall and run-off from surrounding areas, but the salt content of the soil results in brackish or saline inundation within these features.

---

22 Cowardin, L.M., V. Carter, F.C. Golet, and E.T. LaRoe. 1979. Classification of Wetlands and Deepwater Habitat of the United States. U.S. Department of the Interior. Fish and Wildlife Service. Washington DC.

23 H.T. Harvey and Associates, 2010. Envision San José 2040 General Plan Update Biological Resources Report. August, 2010.

24 Environmental Science Associates (ESA) and Jones and Stokes. San Jose/Santa Clara Water Pollution Control Plant Master Plan Draft EIR. File No. PP11-043, SCH # 2011052074. December 2012.

Artesian Slough also contains open water habitat. Artesian Slough is a 2.5-mile long tidal slough that begins at Los Esteros Road and ends at Coyote Creek. The RWF discharges into the upstream end of Artesian Slough and is the sole source of freshwater to the slough. The boundaries of open water in Artesian Slough were determined based on the limit of vegetation at the edge of the adjacent tidal freshwater marsh. As such, open water in this portion of the study area is almost entirely unvegetated.

Many species of waterfowl will use open water habitat including mallard (*Anas platyrhynchos*), American coot (*Fulica americana*), California gull (*Larus californicus*), gadwall (*Anas strepera*), Clark's grebe (*Aechmorphorus clarkii*), pied-billed grebe (*Podilymbus podiceps*), northern shoveler (*Anas clypeata*), double-crested cormorant (*Phalacrocorax auritus*), California brown pelican (*Pelecanus occidentalis californicus*), and Canada goose (*Branta canadensis*).

Aquatic species including Pacific lamprey (*Entosphenus tridentata*), Central Valley (CV) fall-run Chinook salmon Evolutionarily Significant Unit (ESU) (*Oncorhynchus tshawytscha*), Central California Coast (CCC) steelhead Distinct Population Segment (DPS) (*Oncorhynchus mykiss*), Central California roach (*Lavinia symmetricus symmetricus*), Sacramento sucker (*Catostomus occidentalis*), prickly sculpin (*Cottus asper*), mosquitofish (*Gambusia affinis*), bluegill (*Lepomis macrochirus*), and inland silverside (*Menidia beryllina*) are known to occur in the tidal waters of the study area.

Tidal Freshwater Marsh

Tidal freshwater marsh is found along the eastern boundary of Artesian Slough. Artesian Slough includes portions of the west levee bank, north and south of the Pond A18 South Gate Structure (see Figure 2-1). Tidal freshwater marsh refers to areas only intermittently or sporadically exposed to tidal influence. The freshwater flow from the RWF combined with the very low levels of salinity influenced from the San Francisco Bay, make this habitat type tolerable to typically freshwater emergent plant species. Dominant species in this habitat type include California bulrush (*Schoenoplectus californicus*), cattail (*Typha* sp.), western goldenrod (*Euthamia occidentalis*), wild radish (*Raphanus raphamistrum*), pickleweed (*Salicornia* sp.), and perennial pepperweed (*Lepidium latifolium*).

Wildlife species commonly found in this habitat include saltmarsh harvest mouse (*Reithrodontomys raviventris*), western pond turtle (*Actinemys marmorata*), Ridgway's rail (*Rallus obsoletus*), California least tern (*Sterna antillarum browni*), American coot, mallard, great egret (*Ardea alba*), black-crowned night heron (*Nycticorax nycticorax*), great blue heron (*Ardea herodias*), black-necked stilt (*Himantopus mexicanus*), saltmarsh common yellowthroat (*Geothlypis trichas sinuosa*), Alameda song sparrow (*Melospiza melodia pusillula*), song sparrow (*Melospiza melodia*), black phoebe (*Sayornis nigricans*), western snowy plover (*Charadrius alexandrinus nivosus*), least Bell's vireo (*Vireo bellii pusillus*), bank swallow (*Riparia riparia*), tricolored blackbird (*Agelaius tricolor*), and red-winged blackbird (*Agelaius phoeniceus*). Freshwater marshes and other freshwater wetlands provide numerous species of wildlife with valuable sources of drinking water, and function to draw species that are preyed upon by larger predators during times when water

sources are limited. As such, freshwater wetlands typically support a wide variety of wildlife, beyond species that exclusively utilize freshwater wetlands.[25]

Non-tidal Freshwater marsh

Non-tidal freshwater marsh occurs in Artesian Marsh, in the southern portion of the study area. Non-tidal salt marsh occurs higher in the marsh than tidal salt marsh and is not frequently inundated by tidal water. This community would not be directly impacted by Project-related activities but may be exposed to indirect impacts. Dominant plant species commonly found in this habitat include pickleweed (*Salicornia* sp.), alkali heath (*Frankenia salina*), and saltgrass (*Distichlis spicata*). Other species observed in non-tidal salt marsh habitat in the perennial pepperweed, five horn bassia (*Bassia hysssopifolia*), dodder (*Cuscuta* sp.), ripgut brome (*Bromus diandrus*) and soft brome (*Bromus hordeaceus*).

Wildlife species that use non-tidal salt marsh are the same as those that are expected to be found in upper, more stable portions of tidal salt marsh because of the similarity of physical habitat characteristics. These species include fossorial mammals (e.g., California ground squirrel (*Otospermophilus beecheyi*), California vole (*Microtus californicus*), salt-marsh harvest mouse) and their predators (e.g., red fox (*Vulpes vulpes*), coyote (*Canis latrans*), turkey vulture (*Cathartes aura*), western burrowing owl (*Athene cunicularia*), American kestrel, and red-tailed hawk), various species of shorebirds and wading birds (e.g., killdeer (*Charadrius vociferus*), great egret, great blue heron), song sparrow, and western fence lizard.

Bareground/Peripheral Halophyte Zone

This habitat type is found on top of the levee and bank of Pond A18. This area consists predominantly of bareground and scattered halophytic (saline-tolerant) species such as pickleweed, alkali heath, and saltgrass. Other plants in this community include alkali mallow (*Malvella leprosa*), black mustard (*Brassica nigra*), and bull mallow (*Malva nicaeensis*), Bermudagrass (*Cynodon dactylon*), five-horn bassia, and annual grasses (*Hordeum murinum, and H. marinum* subsp. *gussoneanum*). The amount of bareground/peripheral halophyte zone habitat fluctuates depending on water levels in Pond A18. This community is subject to RWF maintenance activities, such as mowing and compaction from vehicles. Hydrology of this upland community consists of direct precipitation and infiltration, with limited short duration ponding small depressions in some years. The land surface is relatively level on the top of the levee, so surface runoff is minimal. Because the dominant vegetation does not possess strong wetland indicators, this feature is considered non-jurisdictional.

Wildlife species common to or observed within the bareground/peripheral halophyte zone include black skimmer (*Rynchops niger*), snowy egret, lesser goldfinch (*Spinus psaltia*), great egret, American white pelican (*Pelecanus erythrorhynchos*), song sparrow, mallard, gull (*Larus* spp.), double-crested cormorant, American avocet (*Recurvirostra americana*), Brandt's cormorant (*Phalacrocorax penicillatus*), American crow (*Corvus brachyrhynchos*), and other songbirds, in addition to western fence lizard (*Sceloporus occidentalis*).

[25] ICF International, 2012. San Jose/Santa Clara Water Pollution Control Plant Master Plan Existing Conditions Report. January 2012.

Wetlands and Other Waters

ESA biologists conducted a preliminary draft wetland delineation for the Project on February 23, 2017 to identify jurisdictional limits of regulated wetlands and other waters of the U.S. and of the State in the vicinity of the proposed Project site. Potentially jurisdictional features within the study area that could be affected by the Project include freshwater tidal marsh (tidal), open water (tidal), managed pond (muted-tidal) (Figure 2-1). Both Artesian Slough and Pond A18 are traditionally navigable waters with a hydrological connection to the Bay, which is also a traditionally navigable water, both of which are subject to regulation under Sections 404 and 401 of the CWA, Section 10 of the Rivers and Harbors Act, and the Porter-Cologne Water Quality Control Act.

All areas identified in the Preliminary Delineation of Waters of the U.S.[26] are preliminary and subject to revision, pending review and final verification by the Corps. Wetland and open water areas not regulated under the Federal Clean Water Act may still be regulated by the Regional Water Quality Control Board as waters of the State, which retains regulatory authority over some isolated waters and wetlands according to California's Porter-Cologne Water Quality Control Act. In addition, CDFW map regulate up to the top of the levee bank under a Lake and Streambed Alteration Agreement pursuant to California Fish and Game Code section 1602, but CDFW does not always assert this jurisdiction in tidal waters.

Special-Status Species

A list of special-status plant and animal species that could occur in the study area was compiled based on data described above in Introduction. Table 2-2 list special-status plants and animals, their preferred habitats, plant blooming periods, and their potential to occur in the study area. Figure 2-1 presents special-status plant and animal occurrences, respectively, documented in the CNDDB database and in the study area. Conclusions regarding habitat suitability and the potential for species occurrence in the study area are based on the results described in previous studies, the reconnaissance survey and wetland delineation on February 23, 2017 by ESA, and the analysis of existing literature and database queries described above.

It was then determined whether there is a low, moderate, or high potential for species occurrence in the study area based on previous special-status species record locations and current site conditions. Only species with a moderate or high potential for occurrence are discussed further in this section. Species unlikely to occur in the study area due to lack of suitable habitat or range were eliminated from the discussion.

Special-Status Plants

No special-status plants were determined to have a moderate or high potential to occur on the Project site. Special-status plant species listed in Table 2-2 are considered to be absent or have a low potential to occur at the Project sites. No special-status plants were observed during the reconnaissance survey and wetland delineation conducted on January 28, 2015 or on the biological resources reconnaissance surveys. Although the reconnaissance survey did not constitute a detailed botanical inventory of the Project site and surrounding areas, the overall

[26] Environmental Science Associates (ESA), 2017. San José-Santa Clara Regional Wastewater Facility Pond A18 South Structure Preliminary Delineation of Waters of the U.S. July, 2017.

potential of the study area to support special-status plants is considered low based on the lack of native plants and native vegetation communities and the presence of established populations of non-native and invasive weedy species on and adjacent to the levee. In addition, ongoing operations and maintenance activities on top of the levee (e.g., mowing) indicates disturbance associated with vehicles or equipment over the past several years and reinforces the conclusion that special-status plants are unlikely to be present.

Special-Status Animals

The following table presents special-status animals that were determined to have a moderate or higher potential to occur in the study area.

TABLE 2-2
SPECIAL-STATUS SPECIES WITH MODERATE OR HIGH POTENTIAL TO OCCUR IN THE STUDY AREA

Species	Conservation Status
Pacific lamprey	CDFW Species of Special Concern (November – April)
Southern DPS of North American green sturgeon	Federally Threatened, National Marine Fisheries Service (NMFS) Species of Concern, CDFW Species of Special Concern (August – February)
longfin smelt	Candidate Federally Threatened, State Threatened, CDFW Species of Special Concern (January – March)
Central Valley fall-run Chinook salmon ESU	CDFW Species of Special Concern (December – May)
Central California Coast steelhead DPS	Federally Threatened (December – May)
Salt-marsh harvest mouse	Federally Endangered, State Endangered, State Fully Protected
western pond turtle	CDFW Species of Special Concern
Ridgway's rail	Federally Endangered, State Endangered, State Fully Protected
double-crested cormorant	CDFW Watch List species
caspian tern	USFWS Bird of Conservation Concern
northern harrier	CDFW Species of Special Concern
California gull	USFWS Bird of Conservation Concern
Tricolored blackbird	State Candidate Endangered, CDFW Species of Special Concern, and USFWS Bird of Conservation Concern
saltmarsh common yellowthroat	CDFW Species of Special Concern, USFWS Bird of Conservation Concern
Alameda song sparrow	CDFW Species of Special Concern, USFWS Bird of Conservation Concern

SOURCE: ESA 2017 (Appendix B)

In addition, Fish and Game Code Sections 3503 and 3503.5, and the Migratory Bird Treaty Act protect raptors and passerines and their eggs and nests from incidental "take". These protections apply to special-status birds identified in Table 2-2 and other resident or migratory birds that may occur.

Pacific lamprey (*Entosphenus tridentatus*)

Pacific lamprey are the largest of the native lamprey species with adults commonly reaching over 40 cm in total length. They are anadromous fish, rearing in freshwater streams for approximately

5 to 7 years before migrating to the ocean.[27] During their ocean phase, approximately three years in length, they feed parasitically on fish larger than themselves, consuming the body fluids of a variety of species.

Historically, this species may have been present in Artesian Slough. Currently known from the Guadalupe River, Coyote Creek, and Upper Penitencia Creek, and may be locally common in these areas.[28] Species' status is poorly documented, and abundance in other water bodies in the region is unknown. May be present in portions of Artesian Slough during migration between spawning areas and marine foraging habitat. Adults return to freshwater during spawning migrations which typically take place between early March and late June, but can vary greatly depending on the system.[29,30]

Green sturgeon (*Acipenser medirostris*) southern DPS

The most widely distributed member of the sturgeon family and the most marine-oriented, green sturgeon enter rivers only to spawn. Juveniles rear in fresh water for as long as 2 years before migrating to sea. Green sturgeon are thought to spawn every 3 to 5 years in deep pools with high velocity and turbulent water and prefer cobble substrates but can use substrates ranging from clean sand to bedrock. Females produce 60,000 to 140,000 eggs that are broadcast to settle into the spaces in between cobbles. Adult green sturgeon migrate into freshwater beginning in late February with spawning occurring in the Sacramento River in late spring and early summer (March through July), with peak activity in April and June. After spawning, juveniles remain in fresh and estuarine waters for one to four years and then begin to migrate out to the sea.[31] The upper Sacramento River has been identified as the only known spawning habitat for green sturgeon in the southern DPS.[32]

According to recent studies, green sturgeon adults begin moving upstream through the Bay during the winter.[33] Adults in the San Joaquin Delta are reported to feed on benthic invertebrates including shrimp, amphipods and occasionally small fish while juveniles have been reported to feed on opossum shrimp and amphipods.[34] Within the bays and estuaries, sufficient water flow is required to allow adults to successfully orient to the incoming flow and migrate upstream to spawning grounds. Subadult and adult green sturgeon occupy a diversity of depths within bays and estuaries for feeding and migration. Tagged adults and subadults within the San Francisco Bay-Delta have been observed occupying waters over shallow depths of less than 33 feet, either

27 Moyle, P.B. 2002. Inland Fishes of California, University of California Press, Berkeley and Los Angeles, CA.
28 Leidy, R. A. 2007. Ecology, Assemblage Structure, Distribution, and Status of Fishes in Streams Tributary to the San Francisco Estuary, California. San Francisco Estuary Institute. 194 pp.
29 Moyle, P.B. 2002. Inland Fishes of California, University of California Press, Berkeley and Los Angeles, CA.
30 Entrix. 1996. Results of Fish Passage Monitoring at the Vern Freeman Diversion Facility, Santa Clara River, 1996. Prepared for the United Water Conservation District, Santa Paula, CA. December 26, 1996.
31 Moyle, P. B., R. M. Yoshiyama, J. E. Williams, and E. D. Wikramanayake, 1995. Fish Species of Special Concern in California. Second edition. Final report to California Department of Fish and Game, contract 2128IF.
32 Moyle, P.B. 2002. Inland Fishes of California, University of California Press, Berkeley and Los Angeles, CA.
33 Kelly, J. T., A. P. Klimley, and C. E. Crocker, 2003. Movements of adult and sub-adult green sturgeon in the San Francisco Estuary. San Francisco Bay Delta Estuary, 6th Biennial State of the Estuary Conference, Poster, Abstract.
34 Moyle, P. B., R. M. Yoshiyama, J. E. Williams, and E. D. Wikramanayake, 1995. Fish Species of Special Concern in California. Second edition. Final report to California Department of Fish and Game, contract 2128IF.

swimming near the surface or foraging along the bottom. Though the presence of green sturgeon cannot be wholly discounted, green sturgeon are unlikely to occur in the project area because they rarely utilize habitat this far south in San Francisco Bay. In recent years, the interagency Ecological Program's (IEP) midwater and bottom trawl surveys have failed to record a single individual at any of their South Bay monitoring stations. [35]

Longfin smelt (*Spirinchus thaleichthys*)

Longfin smelt is a small, slender-bodied pelagic fish that measures about 3 inches in length as an adult. The species generally lives for two years although some three-year smelt have been observed. Those that survive to the planktonic larval stage are transported into the western Delta and Suisun Bay during the late winter and spring where juveniles rear. Longfin smelt reside as juveniles and pre-spawning adults in the more saline habitats within San Pablo Bay and Central Bay during a majority of their life.[36] Movement patterns based on catches in CDFW fishery sampling suggest that longfin smelt actively avoid water temperatures greater than 20° C.[37] These conditions occur within the Delta during the summer and early fall, when longfin smelt inhabit more marine waters further downstream in the bays and are not present within the Delta. Longfin smelt have been recorded in low numbers in recent years in portions of South San Francisco in the study area.[38] Longfin smelt are generally rare in Artesian Slough; however, they have been observed at the mid and far downstream points of the slough (nearest location is approximately ¾-mile north of Project site) and more frequently out into Lower Coyote Creek and Pond A19.[39] As such, they have a low potential to occur within the Project site.

Central Valley fall-run Chinook salmon ESU (*Oncorhynchus tshawytscha*)

The Central Valley (CV) fall-run ESU represents a population of Chinook salmon that migrate from the ocean to spawning streams in late fall and begin spawning in beds of coarse river gravels typically within October and November, but often continuing into December and January. [40] Populations of fall-run Chinook salmon have suffered the effects of over-fishing by commercial fisheries, degradation of spawning and rearing habitat, added barriers to upstream migration, and reductions in winter flows due to damming. Chinook salmon generally spawn in cool waters providing incubation temperatures no warmer than 19° C. Most stream habitat in South San Francisco Bay lacks the necessary flow regime, habitat availability, and/or water quality to support spawning salmonids. Artesian Slough is a blind slough with no natural freshwater input (the RWF's treated effluent is the only input) and so lacks stream habitat for this species. Additionally, individuals have not been documented in recent years within the study area or the

35 Interagency Ecological Program for the San Francisco Bay Estuary (IEP); San Francisco Bay Study. 2010-2014. Unpublished Raw Mid-water and Otter Trawl Data.
36 Moyle, P.B. 2002. Inland Fishes of California, University of California Press, Berkeley and Los Angeles, CA.
37 Ibid.
38 Interagency Ecological Program for the San Francisco Bay Estuary (IEP); San Francisco Bay Study. 2010-2014. Unpublished Raw Mid-water and Otter Trawl Data.
39 Erwin, J. 2017. Longfin smelt presence in Artesian Slough. Email correspondence from James Erwin to Ken Davies, City of San José - Environmental Services Department. May 23, 2016 12:35 PM.
40 Yoshiyama, R.M., F.W. Fisher, P.B. Moyle. 1998. Historical Abundance and Decline of Chinook Salmon in the Central Valley Region of California. North American Journal of Fisheries Management. Vol. 18. Iss. 3.

immediate vicinity; and any occurrence would only be temporary as the surrounding bay habitat is primarily utilized as a migration corridor.[41]

Central California Coast steelhead DPS (*Oncorhynchus mykiss*)

Central California Coast (CCC) steelhead are anadromous fish that live in the Pacific Ocean, where they feed until sexually mature. This species migrates into freshwater streams and moves upstream until it spawns in cold, clear water and gravel substrate. CCC steelhead range along California's coast from the Russian River in Marin County, south to Aptos Creek in Santa Cruz County, and includes all of the greater San Francisco Bay, east to the confluence of the San Joaquin and Sacramento Rivers. While historically abundant, Southern San Francisco Bay does not currently support a large steelhead population, however they do continue to persist in small numbers within the Coyote Creek and Guadalupe River watersheds.[42]

Juvenile steelhead emigrate episodically from natal streams during fall, winter, and spring high flows, with peak migration occurring in April and May.[43] Emigrating CCC steelhead use tributaries of San Francisco Bay and portions of the San Francisco Bay for rearing and as a migration corridor to the ocean. Individuals migrating between the ocean and spawning habitat in these streams could stray into Artesian Slough. Although data regarding the timing of steelhead smolts is lacking, smolts in other streams within the DPS including those draining to San Francisco Bay, typically emigrate from March through June.[44]

Western pond turtle (*Emys marmorata*)

Western pond turtle is an olive-drab turtle that inhabits a wide variety of water bodies, including ponds, marshes, rivers, streams, and irrigation canals. This species can tolerate full-strength sea water for a short period of time, but normally is found in freshwater. Western pond turtle females migrate away from their water bodies into surrounding uplands, where they construct underground nests and lay eggs from April to August. This species has potential to occur in Coyote Creek and Artesian Slough, primarily north of the Project site. However, the nearest record of this species is over 4 miles from the Project site in Guadalupe River.[45]

Salt marsh harvest mouse (*Reithrodontomys raviventris*)

Salt marsh harvest mouse inhabits salt marsh habitat vegetated with pickleweed around the greater San Francisco Bay. There are records of this species occurring less than 1.5 miles north of the Project site in 1990[46]; however, there are substantial barriers to dispersal from those areas into

---

41 Interagency Ecological Program for the San Francisco Bay Estuary (IEP); San Francisco Bay Study. 2010-2014. Unpublished Raw Mid-water and Otter Trawl Data.

42 Smith, J. 2013. Northern Santa Clara County Fish Resources. Department of Biological Sciences, SJSU. July 25, 2013.

43 Fukushima, L., E.W. Lesh. 1998. Adult and juvenile anadromous salmonid migration timing in California streams. California Department of Fish and Game 84(3): 133-145.

44 Fukushima, L., E.W. Lesh. 1998. Adult and juvenile anadromous salmonid migration timing in California streams. California Department of Fish and Game 84(3): 133-145.

45 California Department of Fish and Wildlife (CDFW), 2017. California Natural Diversity Data Base (CNDDB). Federal Endangered and Threatened Species that May Be Affected by Projects in the Milpitas, Mountain View, Calaveras Reservoir, Newark, Niles, La Costa Valley, Cupertino, San Jose East, and San Jose West, California, U.S. Geological Survey 7.5-minute topographic quadrangles. *Rarefind 5*. Accessed April 10, 2017

46 Ibid.

the Project site, and the actual habitat on site is patchy and of very low quality. Thus, salt marsh harvest mouse has potential to occur in the salt marsh habitat in the southwestern portions of the Project site, but is very unlikely to be present.

Double-crested cormorant (*Phalacrocorax auritus*)

The double-crested cormorant can be found wintering throughout North America but breeds during the spring and summer along the coastlines in freshwater and marine habitats from California to Florida. It forages for fish along the seacoasts and associated bays and estuaries. Breeding is primarily colonial with nests made on the ground at undisturbed sites, in trees, or in man-made structures beside the water. Double-crested cormorant actively nests in and adjacent to Pond A18.[47]

Ridgway's rail (*Rallus obsoletus*)

Ridgway's rail (formerly California clapper rail) ranges along the Pacific Coast in Monterey and San Luis Obispo Counties and inhabits tidal mudflats and sloughs. There are numerous CNDDB records of this species north of the Project site at the confluence of Artesian Slough and Coyote Creek, and Coyote Creek and Alviso Slough. The complex vegetative structure and channel networks of the tidal marshes in the region provide excellent habitat for Ridgway's rails. Optimal habitat for Ridgway's rail comprises tidal salt marsh with direct tidal circulation, an intricate network of tidal sloughs, pickleweed with cordgrass, gumplant, and other high-marsh plants, and abundant and dense high-marsh vegetation for cover during high tides.[48] Brackish marshes are generally not considered to be suitable habitat. Although the freshwater influence found in the Project site may not provide high quality habitat, Ridgway's rail could be present downstream of the Project site in Artesian Slough where tidal action is more dominant and salinity levels are higher. Less likely but still possible, this species could forage in the marsh vegetation on the Artesian Slough side of the levee in the Project site. There are records of this species occurring northeast of the Project site in the Alviso pond complex; however, the most recent of those shown in the CNDDB is from an observation made in 1975.[49] More recent surveys by the biological staff of the Don Edwards San Francisco Bay National Wildlife Refuge have detected Ridgway's rail presence in the restored tidal marsh habitat in Pond A21, directly north of the Project site.[50]

Tricolored blackbird (*Agelaius tricolor*)

Tricolored blackbird is a permanent resident of the Central Valley but breeds in scattered coastal locations from Marin County to San Diego. This species nests colonially, with a typical minimum colony size of 50 pairs, in dense marsh vegetation such as cattails (*Typha* spp.) and bulrush (*Scirpus*

---

47 San Francisco Bay Bird Observatory (SFBBO), 2016. Citizen Science-Based Colonial Waterbird Monitoring 2016 Nesting Summary. December 31, 2016.

48 Albertson, J. and J. Evans. 2000. California Clapper Rail. pp. 332-340 In: Goals Project, 2000. Bayland Ecosystem Species and Community Profiles: Life histories and environmental requirements of key plants, fish and wildlife. Prepared by the San Francisco Bay Area Wetlands Ecosystems Goals Project. P.R. Olofson, editor. San Francisco Bay Regional Water Quality Control Board, Oakland, California.

49 California Department of Fish and Wildlife (CDFW), 2017. California Natural Diversity Data Base (CNDDB). Federal Endangered and Threatened Species that May Be Affected by Projects in the Milpitas, Mountain View, Calaveras Reservoir, Newark, Niles, La Costa Valley, Cupertino, San Jose East, and San Jose West, California, U.S. Geological Survey 7.5-minute topographic quadrangles. *Rarefind 5*. Accessed April 10, 2017

50 South Bay Salt Pond Restoration Project. 2014. Annual Report. Available at http://www.southbayrestoration.org/documents/technical/SBSPR_2014AR_WebReady.pdf. Accessed July 2017.

spp.). Tricolored blackbird has potential to nest within the dense marsh vegetation along the edges of Artesian Slough. The nearest record of this species occurred within ¼-mile of the Project site in 1995.[51]

Saltmarsh common yellowthroat (*Geothlypis trichas sinuosa*)

Saltmarsh common yellowthroat is found in Marin, Napa, Sonoma, Solano, San Francisco, San Mateo, Santa Clara, and Alameda counties within freshwater marshes in summer and salt or brackish marshes in fall and winter. This species utilizes areas of tall grasses, tules, and willow thickets for cover and nesting substrate. There are multiple CNDDB records of this species north and west of the Project site. Salt marsh common yellowthroat has potential to occur within fresh and saltwater marsh vegetation along Artesian Slough, Coyote Creek, and marshes in the northern and southwestern portions of the Project site. The nearest record of this species, in 1998, is approximately ½-mile away from the Project site.[52]

Alameda song sparrow (*Melospiza melodia pusillula*)

Alameda song sparrow is found in the brackish marshes vegetated with pickleweed along the southern portion of the San Francisco Bay. This species is known to nest within tall vegetation or in pickleweed within its marsh habitat. This species has potential to occur within the brackish marsh habitat along Artesian Slough and Coyote Creek. The nearest record of this species occurred in 2004 and was located less than ¼-mile away from the Project site.[53]

Other resident and migratory birds. Several ground nesting birds such as black-crowned night heron, killdeer, common mallard could nest within the emergent wetland and low groundcover in Artesian Slough or in adjacent suitable habitat. Additional native birds that may nest in the Project site include European starling (*Sturnus vulgaris*), black phoebe, house finch, Anna's hummingbird, mourning dove, and white-crowned sparrow.

Discussion

As discussed in Chapter 1.2, the relevant mitigation measures from the Plant Master Plan EIR's MMRP are incorporated by reference in this document with minor modifications made as necessary to apply to the proposed Project. These Project-specific mitigation measures are presented below following the impacts for which they were developed or adapted.

a) **Less than Significant with Mitigation.** The CNDDB documents 84 special-status species in the Milpitas, Mountain View, Calaveras Reservoir, Newark, Niles, La Costa Valley, Cupertino, San José East, and San José West 7.5-minute quadrangles in which the Project is located. The USFWS documents an additional three species, and CNPS documents an additional 18 plants in these quadrangles. A full list of these species is provided in Appendix B. Habitat for most of these species does not occur on the Project site, and the following discussion – which draws on the text above – assesses possible

[51] Ibid.
[52] Ibid.
[53] Ibid.

effects on the species for which potentially suitable habitat is present and the species has a moderate or higher likelihood to occur in the Project site.

Special-status fish species (Pacific lamprey, longfin smelt, green sturgeon, CV fall-run Chinook salmon, and CCC steelhead)

Short-term impacts on special-status fish present in the Project site could occur from sheet pile driving, placing other erosion resistance materials, or other construction activities. Potentially significant impacts typically associated with these activities include temporary harmful sound pressure levels associated with pile-driving, the resuspension of benthic sediments, and a short-term loss and disruption of access to foraging habitat. It is anticipated that tides and outflows from the RWF would quickly dissipate the added turbidity plumes. Impacts to marine life would thus be highly localized and temporary.

However, with the implementation of **Mitigation Measure BIO-1**, impacts to special-status fish species would be reduced to less than significant levels. A detailed discussion of impacts to special-status aquatic species, along with proposed mitigation measures, is presented in Appendix B.

Implementation of **Mitigation Measure BIO-1** would ensure that, in the unlikely event that special-status fish or other aquatic species are present during pile driving activity, the impact on these species would be less than significant. In addition, implementation of **Mitigation Measure HYD-1**, best management practices, and conditions in permits issued under the Clean Water Act would also reduce the magnitude of construction effects on aquatic species.

Mitigation Measure BIO-1: Special-Status Fish and Aquatic Species Protection Measures.

- A biological monitor approved by NMFS, USFWS, and CDFW shall be on-site during pile driving to inspect the work zone and adjacent waters and monitor the construction contractor's compliance with these mitigation measures and with the permit conditions.
- The project proponent and its contractors shall conduct in-water work only during the National Oceanic and Atmospheric Administration (NOAA)-approved work window (June 1 – November 30).
- Sheet piles shall be installed using a vibratory pile driver to minimize noise impacts on fish and wildlife. Vibratory pile installation shall be conducted in accordance with the USACE's "*Proposed Additional Procedures and Criteria for Permitting Projects Under a Programmatic Determination of Not Likely to Adversely Affect Select Listed Species in California*.[54]" As described in Appendix B, use of the vibratory pile driver would keep underwater sound pressure levels well below the established regulatory levels to protect fish.

[54] U.S. Army Corps of Engineers. 2013. Proposed Additional Procedures and Criteria for Permitting Projects Under a Programmatic Determination of Not Likely to Adversely Affect Select Listed Species in California (the 2013 NLAA Program). August 13, 2013.

- Piles shall be driven at low tides as often as practicable to reduce noise or other direct impacts on fish and to reduce turbidity that might indirectly affect them.

Note that the Plant Master Plan EIR contains a mitigation measure (Mitigation Measure BIO-2a: Special-Status Fish Measures) to protect special-status fish, but it pertains specifically to the activities associated with the planned restoration of Pond A18 to tidal marsh, thus not all of the details in that measure apply here. The currently proposed Project is intended to retain the levee and the function of Pond A18 until that future restoration project can take place, and nothing in the proposed Project would undermine or contradict the details of that mitigation measure.

Special-status bird species

Suitable nesting habitat for common bird species and special status bird species, including Ridgway's rail, double-crested cormorant, Caspian tern, northern harrier, California gull, tricolored blackbird, saltmarsh common yellowthroat, and Alameda song sparrow is present in the project area.

Nearby power lines inside of Pond A18 and existing chain link fences and gates at the southern edge of Pond A18 provide some roosting areas or hunting perches for many of these species, while Artesian Slough, Pond A18, and Artesian Marsh provide suitable nesting habitat for some of them. Various shrubs and thick emergent vegetation in the project area, such as tall forbs, poison hemlock, wild radish, and mustard also provide suitable foraging and nesting habitat for special-status and common ground nesting bird species. Although no active nesting sites were observed during the reconnaissance survey, mallards, black-crowned night heron, and Canada geese were observed foraging and resting in the emergent vegetation in Artesian Slough.

Potentially significant impacts on special status, and resident and migratory species could occur during Project construction, and during breeding seasons. Impacts during the non-breeding season are not considered significant, primarily due to birds' mobility and ability to access other high-quality foraging and nesting habitat in the region. Project construction would render the site temporarily unsuitable for birds due to the noise, vibrations, and increased activity levels associated with vegetation grubbing, earth moving, pile driving, and heavy equipment operation. These activities could subject birds to risk of death or injury, and they are likely to avoid using the area during Project construction. Avoidance, in turn, could cause hunger or stress among individual birds by displacing them into adjacent territories.

Construction impacts during the breeding season, however, would be considered significant due to the potential to result in "take", or loss, of a nest; disturbances during the nesting season can cause reduced incubation, reduced foraging by adults, reduced feeding of chicks, nest predation, nest abandonment, and other forms of nest failure.

Implementation of **Mitigation Measure BIO-2** would reduce potential impacts on migratory and special-status birds to a less-than-significant level by restricting certain

construction activities during the breeding bird season, requiring preconstruction surveys, and implementing avoidance measures if active nests are located.

Mitigation Measure BIO-2: Special-status Bird Protection Measures.

- The project proponent and its contractors shall retain a qualified agency-approved[55] wildlife biologist and conduct surveys for Ridgway's rail, other special-status, and migratory birds prior to initiation of construction activities. These surveys are required for construction activities conducted at any time of the year.
- If Ridgway's rail or other special-status or migratory bird species are detected in the Project site during surveys, the project proponent shall consult USFWS and CDFW staff to identify the appropriate avoidance measures The project proponent shall be responsible to ensure that USFWS and/or CDFW requirements are implemented.
- If a Ridgway's rail is detected within 500 feet of the Project site during their nesting season (February 1 – August 31), all construction activities within 500 feet of suitable nesting or forage habitat for this species will be delayed until after the nesting season is over.
- If a Ridgway's is detected within 500 feet of the Project site during the non-nesting season (September 1 – January 31), construction activities can commence, but all vegetation shall be cleared by hand or with hand tools and a biologist will be retained on site during vegetation clearing activities to ensure that no birds are injured. Once the construction site is devoid of vegetation regular construction can commence.
- If an active nest of any other bird species is discovered in the Project site during surveys, a no-disturbance buffer zone nest shall be established. The no-disturbance zone shall be marked with flagging or fencing that is easily identified by the construction crew and shall not affect the nesting bird. The Plant Master Plan EIR's Mitigation Measure Bio-2d: Raptor and Migratory Bird Next Measures specifies the general buffer distances for different types of birds. Following that document's direction, the minimum buffer zone widths shall be as follows: 20–25 feet (radius) for non-raptor ground-nesting species; 50 feet (radius) for non-raptor shrub- and tree-nesting species; and 300 feet (radius) for raptor species. Buffer widths will be confirmed or adjusted in discussion with USFWS and CDFW. Buffers shall remain in place as long as the nest is active or young remain in the area and are dependent on the nest.
- If any birds or raptors initiate nests within the established buffer distances while construction is happening, then it is assumed that they are habituated to the construction activities, and construction can continue as long as the birds or their nests are not physically harmed, and, if birds or raptors are special status or protected species, consultation with USFWS and/or CDFW occurs.

[55] The "agency"-approved biologist for terrestrial mitigation measures would be approved by USFWS and CDFW, the federal and state regulatory agencies responsible for implementing endangered species acts, and/or state regulations applicable to Fully-Protected Species.

Salt marsh harvest mouse

No salt marsh vegetation suitable for use by salt marsh harvest mouse is present in the Project site. There would be no direct impacts to or loss of salt marsh harvest mouse habitat. However, marginally suitable habitat for salt-marsh harvest mouse occurs in the non-tidal portion of Artesian Marsh located south of the Project site. Since no construction activities are proposed in Artesian Marsh, no salt marsh harvest mouse habitat would directly be affected by the Project.

Impacts of construction noise and vibration on salt-marsh harvest mice individuals present in the project vicinity are unknown, but if present, mice could be temporarily subject to increased stress during construction since their ability to avoid the noise and vibrations associated with Project construction would be constrained by site conditions. Project construction activities may result in harm or harassment of salt marsh harvest mouse individuals, which would be considered a significant impact. Implementation of the **Mitigation Measure BIO-3** (developed by adapting and modifying Master Plan EIR's Mitigation Measure Bio-2c: Salt marsh harvest mouse and salt marsh wandering shrew measures to be specific and relevant to the proposed Project) and **Mitigation Measure BIO-4** would reduce effects on salt marsh harvest mice to less than significant.

Mitigation Measure BIO-3: Salt marsh harvest mouse protection measures.

- Construction activities, including site preparation, shall avoid suitable salt marsh harvest mouse habitat, especially during this species' breeding season (March 1 to November 30, per the Plan Master Plan EIR's Mitigation Measure Bio-2c: Salt marsh harvest mouse and salt marsh wandering shrew measures). As work during the species' breeding seasons will likely be necessary, avoidance and minimization measures shall be developed in consultation with USFWS and CDFW, and then implemented.

- Measures shall include, but not limited to, the following:

  – Prior to initiation of work in suitable habitat, an agency-approved biologist shall be retained to conduct preconstruction surveys areas where disturbance is planned. Surveys shall take place no more than 24 hours before the onset of vegetation removal or ground-disturbing activities.

  – Prior to construction, a 48-inch silt exclusion fencing with wire-mesh backing shall be installed by hand along the northern boundary of Artesian Marsh across the Pond A18 levee; and along the southern and eastern boundary of the Artesian Slough tidal marsh extending 250 feet north and south from the Project footprint, to prevent salt marsh harvest mice from entering the active work area; to protect habitat within the marsh from earthmoving activities or accidental spills, and to exclude workers from the marsh.

  – An agency-approved biologist shall be present during all Project related activities that may impact salt marsh harvest mouse or other sensitive terrestrial wildlife species or their habitats.

- An agency-approved biologist shall supervise the hand removal of any vegetation, including patches of pickleweed habitat detected (during the February 2017 reconnaissance surveys, a few small (1-2 feet diameter), isolated, and widely spaced patches of pickleweed were detected) to avoid impacts on salt marsh harvest mouse. Such monitoring will occur for the duration of all clearing work within suitable habitat.
- If salt marsh harvest mouse individuals are observed in or near the Project work area, all construction activities shall cease until the USFWS and CDFW can be contacted and appropriate avoidance, protection, or relocation measures can be developed, approved, and implemented. Depending the specific location and agency guidance, these measures may include relocation or buffer distances.

Mitigation Measure BIO-4: Construction worker- and vehicle-related measures.

- Prior to construction, all construction workers shall take part in an environmental awareness program conducted by an agency-approved biologist. The biologist shall train work crews in standard procedures for identifying and avoiding impacts to all special-status species with the potential to occur in the work area. The awareness program shall be conducted at the start of construction and thereafter as required for new construction personnel.
- The area beneath vehicles or equipment parked in the work area shall be checked for the presence of salt marsh harvest mouse and other wildlife before being moved, during construction in the roadway, and during movement of staging materials within the entire Project site.

Western pond turtle. There is suitable aquatic habitat for western pond turtle in the marsh vegetation of Artesian Slough. The species could utilize the Project site for dispersal or migratory movement to aquatic features in the surrounding areas. As such, construction activities could significantly impact western pond turtle species through direct mortality or upland habitat disturbance. Implementation of **Mitigation Measure BIO-4** and **Mitigation Measure BIO-5** would reduce potential impacts to western pond turtle to less than significant levels by requiring project construction workers to complete a worker environmental awareness program and conducting preconstruction surveys to ensure western pond turtle are not present in the work area. Note that **Mitigation Measure BIO-5** was developed by adapting and modifying Master Plan EIR's Mitigation Measure Bio-2b: western pond turtle measures to be specific and relevant to the proposed Project.

Mitigation Measure BIO-5: Western Pond Turtle Protection Measures.

- Prior to the start of construction activities, the project proponent shall retain a qualified agency-approved biologist to conduct preconstruction surveys for pond turtles in all suitable habitats (aquatic and upland) in the vicinity of the work site. Surveys shall take place no more than 72 hours prior to the onset of site preparation and construction activities with the potential to disturb turtles or their habitat.

- If preconstruction surveys identify active western pond turtle nests within the Project site, the biologist shall establish no-disturbance buffer zones around each nest using temporary orange construction fencing. The demarcation shall be permeable to allow young turtles to move away from the nest following hatching. The radius of the buffer zone and the duration of exclusion shall be determined in consultation with the CDFW. The buffer zones and fencing shall remain in place until the young have left the nest, as determined by the qualified biologist.

- A qualified biologist shall monitor construction activities in the vicinity of suitable habitat within which western pond turtle is found (either during the survey or observed during construction), and remove and relocate western pond turtles in proposed construction areas to suitable habitat outside the project limits, consistent with CDFW protocols and handling permits. Relocation sites shall be subject to CDFW approval.

- If any turtles are found in the Project site, construction activities shall halt within 50 feet and the qualified biologist shall be notified. If the biologist determines the turtle is a western pond turtle, the turtle shall be relocated into nearby suitable habitat consistent with CDFW protocols and handling permits.

b) **Less than Significant.** CDFW identifies certain vegetation communities as special-status, indicating that they are of limited distribution in California and may also support rare plants. Although no rare plants are expected to occur in the Project site, a small area (<500 square feet) of existing marsh vegetation would be permanently lost as the levee is refilled to its original dimensions. Although this community is tidal freshwater marsh, it could also be considered Northern Coastal Salt Marsh due to the saline influences of the San Francisco Bay. There is also a minimal amount of temporary impact to this community, where clearing and grubbing would take place prior to the placement of the sheet piles. This small area would re-establish itself after construction. The permanent loss of this habitat are very minor losses of a vegetation community that only recently formed in the eroded void on the edge of the levee, and would be offset by the project benefits to water quality of the slough that would result from stopping erosion around the gate. Therefore, Project implementation would not result in impacts on special-status vegetation communities. This impact is considered less than significant.

c) **Less than Significant with Mitigation.** Proposed Project construction, including sheet pile installation, would result in loss of a very small area of recently established federally protected wetlands as the levee is restored to its original footprint. As described in item (b) above, this small area of lost wetlands would not rise to the level of a substantial adverse effects on waters of the U.S. under the jurisdiction of the USACE (or waters of the State under the jurisdiction of the San Francisco Regional Water Quality Control Board, streambeds under CDFW's jurisdiction, or other areas under San Francisco Bay Conservation and Development Commission jurisdiction) Permits for this small amount of fill in jurisdictional waters are being sought from these agencies, as required.

Separate from fill, project construction activities such as grading and excavation would generate loose, erodible soils which could result in erosion or siltation into the Artesian Slough or Pond A18. In the case of soil erosion or an accidental release of deleterious materials during construction, the Project could indirectly impact water quality, which would be a significant impact. However, as described in Section 2.2.10, Hydrology and Water Quality, the City is required to implement **Mitigation Measure HYD-1** to avoid and minimize the potential for soil erosion and accidental release of deleterious materials during construction. Therefore, the potential for degradation of water quality in wetlands and other jurisdictional waters would be reduced to less than significant.

d) **Less than Significant.** The Project site is located in the regionally-sensitive natural area of the San Francisco Bay. Avian species rely on the tidal marsh, slough, and open waters in the Project site during seasonal migrations and/or require these specific habitats to successfully breed. The tidal freshwater marsh and open water found in the Project site provides favorable locations for wildlife to travel between larger areas of open space which support foraging, breeding, shelter, and preferred summer and winter range locations. Impacts to this habitat will largely be avoided; the Project itself is small in size within the context of the surrounding open space and alternative habitats. It is also very short in duration and scheduled to avoid nesting seasons and migration seasons of as many species as possible. Further, the repair of the levee would prevent potential failure of the levee and flow control facility. Because the Project would ensure continued operation of the levee and RWF structures, upon completion, the Project would not substantially interfere with the movement of any resident species or impede the use of native wildlife nursery sites.

e) **No Impact.** There would be no loss or damage to protected trees as a result of the proposed Project, thus, the Project would not conflict with any local policies or ordinances protecting biological resources.

f) **No Impact.** The Project does not conflict with an approved local, regional, or state habitat conservation plan. The nearest habitat conservation plan, Santa Clara Valley Habitat Conservation Plan, covers an area located approximately 0.6 miles south of the Project.

2.2.5 Cultural Resources

Issues (and Supporting Information Sources):	Potentially Significant Impact	Less Than Significant with Mitigation Incorporated	Less Than Significant Impact	No Impact
5. CULTURAL RESOURCES — Would the project:				
a) Cause a substantial adverse change in the significance of a historical resource as defined in §15064.5?	☐	☐	☒	☐
b) Cause a substantial adverse change in the significance of an archaeological resource pursuant to §15064.5?	☐	☒	☐	☐
c) Directly or indirectly destroy a unique paleontological resource or site or unique geologic feature?	☐	☐	☐	☒
d) Disturb any human remains, including those interred outside of formal cemeteries?	☐	☒	☐	☐

Historical Architectural Resources

Environmental Science Associates (ESA; environmental consultant to the City for the Plant Master Plan EIR and this project) completed a cultural resources study for the Plant Master Plan EIR and the Capital Improvements Projects.[56] The studies identified the adjacent Alviso Salt Pond Historic Landscape as a historic district found eligible for listing in the National Register of Historic Places (National Register) and recommended that Pond A18 be evaluated as a contributor to the district.

In 2009, the U.S. Fish and Wildlife Service (USFWS) recommended the Alviso Salt Pond Historic Landscape as eligible for listing as an historic district in the National Register under Criterion A "because it is associated with the twentieth century period of industrialization when one operator [the Leslie Salt Company] created a vast network of evaporation ponds to produce the large amount of brine necessary to meet production demands. The Alviso Unit landscape clearly reflects the industrial zenith and development of huge tracks of salt marsh for salt brine production. The large exterior levees and vast ponds are the signature features of the Alviso Unit solar salt landscape."[57] Furthermore, the historic district was found to retain "fair integrity" due to the continued existence of character-defining features (discussed below).[58]

The Alviso Unit contains 28 salt ponds.[59] The majority of these ponds are included within the boundaries of the Alviso Salt Pond Historic Landscape. At the time it was evaluated in 2009, the boundaries of the Alviso Salt Pond Historic Landscape were "established by legal ownership and natural features. The area is managed as part of the Don Edwards San Francisco Bay [National Wildlife Refuge]."[60] The boundaries excluded Pond A18 because it was privately owned, and Pond A18 was therefore omitted from the study of the Alviso Salt Pond Historic Landscape.[61]

56 San José-Santa Clara Water Pollution Control Plant Master Plan Cultural Resources Survey Report.
57 U.S. Fish and Wildlife Service. 2009. Identification and Evaluation of the South San Francisco Bay Solar Salt Industry Landscape. Region 8. Sacramento, California. March 9.
58 Ibid.
59 Ibid.
60 Ibid.
61 Ibid, 57.

Evaluation of Pond A18 as It Relates to the Alviso Salt Pond Historic Landscape

Significance

As noted above, the Alviso Salt Pond Historic Landscape is significant for its association with the Leslie Salt Company, which owned and operated the Alviso Unit from 1936 until 1978. In a 1953 map titled "Crude Salt Plants on San Francisco Bay," modern-day Pond A18 is shown as one of the many concentrating ponds within the boundary of the property operated by the Leslie Salt Company. The pond was illustrated as being surrounded by an undulating outer levee and as having one point of salt water intake and three additional points of incoming and/or outgoing water flow.[62] Despite being excluded from the Alviso Salt Pond Historic Landscape study area in 2009, the research completed by USFWS indicates that Pond A18 was part of the Leslie Salt Company's operations in the Alviso Unit. As such, Pond A18 shares the significant association with that company that makes the Alviso Salt Pond Historic Landscape eligible for listing in the National Register. For this reason, Pond A18 appears to be a contributor to the Alviso Salt Pond Historic Landscape and should be included within its boundaries.

Integrity

According to the USFWS report, "Character defining features of the Alviso Salt Pond Historic Landscape are the perimeter levees, interior pond divisions, and locations of water control structures that are similar to the 1953 configuration. The water control structure mechanisms are located in the same places, but are generally replaced every 10 to 20 years because of harsh conditions, therefore the structures themselves are not historically important."[63]

Pond A18 possesses some of the abovementioned character-defining features. The configuration of the pond's present perimeter levee aligns closely to the 1953 configuration, and appears to differ only in the northeast area along Coyote Creek. The perimeter levee is perhaps the most essential character-defining feature of the Alviso Salt Pond Historic Landscape because, as noted in the 2009 report, it "can be interpreted."[64] Pond A18 does not contain interior pond divisions, and the 1953 map and a 1956 aerial photograph confirm that there were historically no interior pond divisions.

Determining the existence of "locations of water control structures that are similar to the 1953 configuration" in Pond A18 is less straightforward. Although the 1953 map shows arrows that represent the direction of the flow of water through the Alviso Unit salt pond system, it is unclear whether the arrows also represent the actual locations of water control structures. The 1953 map indicates that there were multiple water control structures regulating the flow of water into and out of Pond A18. However, according to the map, modern-day Pond A16—which is adjacent to Pond A18 on its southwest side—did not function as part of the operations of the Leslie Salt Company in 1953 (although it was owned by that company), and no flow of water between the two ponds is illustrated in the 1953 map. Therefore, it is unlikely that a water control device was located in the present-day location of the South Gate Structure in 1953. As such, neither the South

62 Ver Planck, William E. "Salt in California." *California Division of Mines* Bulletin No. 175 (March 1958), Plate 1.
63 Ibid, 58.
64 Ibid, 58.

Gate Structure nor its location appear to contribute to the significance of Pond A18 or the Alviso Salt Pond Historic Landscape.

Because Pond A18 retains its perimeter levee in a configuration that closely resembles the 1953 levee configuration, it retains sufficient integrity to convey its historic significance as a contributor to the Alviso Salt Pond Historic Landscape. Pond A18 is therefore considered a historical resource for the purposes of CEQA.

Archaeological Resources and Human Remains

To determine the archaeological sensitivity of the project area, ESA completed a records search at the Northwest Information Center (NWIC) of the California Historical Resources Information System on August 1, 2011 (File No. 11-0118)[65] and updated the search on February 12, 2015 (File No. 14-4014)[66] and May 11, 2016 (File No. 15-1655).[67] Previous surveys, studies, and archaeological site records were reviewed. Records were also examined in the Historic Property Data File for Santa Clara County, which contains information on locations of recognized historical significance including those evaluated for listing in the National Register, the California Register, the California Inventory of Historic Resources, California Historic Landmarks, and California Points of Historical Interest. The purpose of the records search was to (1) determine whether known cultural resources have been recorded within or adjacent to the Project area and the Project vicinity; (2) assess the likelihood for unrecorded cultural resources to be present based on historical references and the distribution of nearby sites; and (3) develop a context for the identification and evaluation of cultural resources.

Six archaeological resources have been recorded within 2-miles of the Project area; all six are prehistoric occupation sites with midden soils, fire-affected rock, faunal remains, and/or Native American artifacts. At least two of the sites are known to contain human burials. None of these resources are located within the Project area; the nearest is approximately 1½-miles to the southeast. All of the sites are located in areas that would have historically been the habitable shoreline adjacent to the extensive marshland of the San Francisco Bay.

Historically, the Project area was within the tidal marshland and would not have been a suitable location for prehistoric occupation. While the marshland was an important resource procurement area during the prehistoric period, archaeological site formation would not be feasible. Additionally, the levee that creates Pond A18 is an artificial construct that would not maintain intact archaeological deposits. For these reasons, the potential to uncover archaeological resources and/or human remains is very low.

Paleontological Resources

The Project area overlies artificial fill and young Holocene-age geologic units. Beneath the levees that are constructed of artificial fill lie deposits of mud and silt associated with the present-day

65 San José-Santa Clara Water Pollution Control Plant Master Plan Cultural Resources Survey Report.
66 San José-Santa Clara Regional Wastewater Facility Zanker Road Development Area Cultural Resources Survey Report.
67 San José-Santa Clara Regional Wastewater Facility Cogeneration Project Cultural Resources Study.

bay estuary (bay mud). Artificially deposited fill and young Holocene-age geologic units do not have the potential to contain paleontological resources. For these reasons, in accordance with Society of Vertebrate Paleontology[68] standards, there is a low paleontological potential within the Project area.

Discussion

a) **Less than Significant Impact.** CEQA Guidelines Section 15064.5 requires the lead agency to consider the effects of a project on historical resources. A historical resource is defined as a building, structure, site, object, or district (including landscapes) listed in or determined to be eligible for listing in the California Register, or determined by a lead agency to be significant in the architectural, engineering, scientific, economic, agricultural, educational, social, political, or cultural annals of California. The following discussion will focus on architectural and structural resources. Archaeological resources, including archaeological resources that are potentially historical resources according to Section 15064.5, are addressed below.

As described above, Pond A18 appears to be a contributor to the Alviso Salt Pond Historic Landscape, a historic district eligible for listing in the National Register. The perimeter levee closely resembles its 1953 configuration, and Pond A18 retains sufficient integrity to convey its historic significance as a contributor to the Landscape. As such, Pond A18 is considered a historical resource for the purposes of CEQA.

The proposed Project, as currently defined, would rework the existing levee of Pond A18. Once the sheet pile rows and steel walers are in place, the excavated material would cover the tie rods and the levee crown would be regraded and surfaced to the original levee grade and slope. The eroded areas would be backfilled with rock aggregate to fill the holes between the sheet pile row, the wing walls of the South Gate Structure, and the remaining section of levee. As impacts would be constrained to temporary construction activities at a small portion of the levee, these effects to the levee, as a historical resource, are considered less than significant. No mitigation would be required.

b) **Less than Significant with Mitigation.** This section discusses archaeological resources, both as historical resources according to Section 15064.5 as well as unique archaeological resources as defined in Section 21083.2(g).

Based on the analysis provided above, the proposed Project has a low potential to uncover archaeological resources. While unlikely, given the general sensitivity of the Project vicinity the inadvertent discovery of redeposited archaeological resources cannot be entirely discounted, including in areas of artificial fill. Impacts to archaeological resources would be potentially significant. In the event that archaeological resources are

68 Society of Vertebrate Paleontology (SVP). Assessment and mitigation of adverse impacts to nonrenewable paleontologic resources: standard guidelines, Society of Vertebrate Paleontology News Bulletin, Vol. 163, p. 22–27. 1995.

encountered during ground disturbing activities, the following mitigation measure would reduce impacts to a less-than-significant level.

Mitigation Measure CUL-1.1: Inadvertent Discovery of Archaeological Resources.

If prehistoric or historic-era archaeological resources are encountered by construction personnel during project implementation, all construction activities within 100 feet shall halt and the contractor shall notify the Environmental Services Department (ESD) personnel and Planning, Building and Code Enforcement (PBCE) Supervising Environmental Planner. Prehistoric archaeological materials might include obsidian and chert flaked-stone tools (e.g., projectile points, knives, scrapers) or toolmaking debris; culturally darkened soil ("midden") containing heat-affected rocks, artifacts, or shellfish remains; and stone milling equipment (e.g., mortars, pestles, handstones, or milling slabs); battered stone tools, such as hammerstones and pitted stones. Historic-era materials might include stone, concrete, or adobe footings and walls; filled wells or privies; and deposits of metal, glass, and/or ceramic refuse.

City's ESD or its contractor shall retain a Secretary of the Interior-qualified archaeologist to inspect the resource within 24 hours of discovery. If it is determined that the project could damage a historical resource as defined by CEQA, construction shall cease in an area determined by the archaeologist until a mitigation plan has been prepared, approved by the PBCE Supervising Environmental Planner, and implemented to the satisfaction of the archaeologist (and Native American representative if the resource is prehistoric or tribal, who will be identified by the Native American Heritage Commission [NAHC]). If the Native American representative identified the finds as a tribal resource, ESD or its contractor shall proceed to **Mitigation Measure CUL-1.2**. For archaeological resources, the archaeologist, in consultation with the PBCE Supervising Environmental Planner and the City's Historic Preservation Officer, shall determine when construction can commence.

The mitigation for archaeological resources shall include preservation in place, or, if preservation in place is not feasible, data recovery through excavation. If preservation in place is feasible, this may be accomplished through one of the following means: (1) modifying the construction plan to avoid the resource; (2) incorporating the resource within open space; (3) capping and covering the resource before building appropriate facilities on the resource site; or (4) deeding resource site into a permanent conservation easement. If preservation in place is not feasible, a qualified archaeologist shall prepare and implement a detailed treatment plan to the satisfaction of the PBCE Supervising Environmental Planner to recover the scientifically consequential information from and about the resource, prior to any excavation at the resource site. Treatment for most resources would consist of (but would not necessarily be not limited to) sample excavation, artifact collection, site documentation, and historical research, with the aim to target the recovery of important scientific data contained in the portion(s) of the significant resource to be impacted by the project. The treatment plan shall include provisions for analysis of data in a regional context, reporting of results within a timely manner, curation of artifacts and data at an approved facility, and dissemination of reports to local and state repositories, libraries, and interested professionals.

Mitigation Measure CUL-1.2: Inadvertent Discovery of Tribal Cultural Resources.

The Native American representative shall make recommendations to the City of San José for the appropriate measures to treat the tribal cultural resource which will be implemented in accordance with Section 15064.5 of the CEQA Guidelines.

Section 2.2.6 has a detailed discussion of tribal cultural resources.

c) **No Impact.** A significant impact would occur if a project would destroy a unique paleontological resource or site, or a unique geologic feature. Paleontological resources are the fossilized evidence of past life found in the geologic record. Despite the tremendous volume of sedimentary rock deposits preserved worldwide, and the enormous number of organisms that have lived through time, preservation of plant or animal remains as fossils is an extremely rare occurrence. Because of the infrequency of fossil preservation, fossils—particularly vertebrate fossils—are considered to be nonrenewable resources. Because of their rarity, and the scientific information they can provide, fossils are highly significant records of ancient life.

The Project area overlies artificial fill and young Holocene-age geologic units. Beneath the levees that are constructed of artificial fill lies deposits of mud and silt associated with the present-day bay estuary (bay mud). Artificially deposited fill and young Holocene-age geologic units do not have the potential to contain paleontological resources. The proposed Project would have no impact on paleontological resources. No mitigation is required.

d) **Less than Significant with Mitigation.** There is no indication that the Project area has been used for burial purposes in the recent or distant past. While unlikely, the inadvertent discovery of redeposited human remains cannot be entirely discounted, including in areas of artificial fill. Impacts to human remains would be potentially significant. In the event that human remains are encountered during ground disturbing activities, the following mitigation measure would reduce impacts to a less-than-significant level.

Mitigation Measure CUL-2: Inadvertent Discovery of Human Remains.

If human remains are encountered by construction personnel during project implementation, all construction activities within 100 feet shall halt and the contractor shall notify the PBCE Supervising Environmental Planner. ESD shall contact the Santa Clara County Coroner and make a determination as to whether the remains are of Native American origin or whether an investigation into the cause of death is required. The Native American Heritage Commission (NAHC) would be contacted within 24 hours if the Coroner determines that the remains are Native American. The NAHC would then identify the person or persons it believes to be the most likely descendant (MLD) from the deceased Native American, who in turn shall make recommendations to the City of San José for the appropriate means of treating the human remains and any associated funerary objects which

shall be implemented in accordance with Section 15064.5(e) of the CEQA Guidelines.

2.2.6 Tribal Cultural Resources

Issues (and Supporting Information Sources):	Potentially Significant Impact	Less Than Significant with Mitigation Incorporated	Less Than Significant Impact	No Impact
17. Tribal Cultural Resources — Would the project cause a substantial adverse change in the significance of a tribal cultural resource, defined in Public Resources Code section 21074 as either a site, feature, place, cultural landscape that is geographically defined in terms of the size and scope of the landscape, sacred place, or object with cultural value to a California Native American tribe, and that is:				
a) Listed or eligible for listing in the California Register of Historical Resources, or in a local register of historical resources as defined in Public Resources Code section 5020.1(k), or	☐	☒	☐	☐
b) A resource determined by the lead agency, in its discretion and supported by substantial evidence, to be significant pursuant to criteria set forth in subdivision (c) of Public Resources Code Section 5024.1. In applying the criteria set forth in subdivision (c) of Public Resources Code Section 5024.1, the lead agency shall consider the significance of the resource to a California Native American tribe.	☐	☒	☐	☐

Setting

Tribal cultural resources are: 1) sites, features, places, cultural landscapes, sacred places, and objects with cultural value to a California Native American tribe that are listed, or determined to be eligible for listing in the California Register of Historical Resources (California Register), or local register of historical resources, as defined in PRC Section 5020.1(k); or, 2) a resource determined by the lead CEQA agency, in its discretion and supported by substantial evidence, to be significant pursuant to criteria set forth in PRC Section 5024.1(c). For a cultural landscape to be considered a tribal cultural resource, it must be geographically defined in terms of the size and scope of the landscape (PRC Section 21074[b]). Also, an historical resource, as defined in PRC Section 21084.1, unique archaeological resource, as defined in PRC Section 21083.2(g), or non-unique archaeological resource, as defined in PRC Section 21083.2(h), may also be a tribal cultural resource.

ESA submit a Sacred Lands File search request to the Native American Heritage Commission (NAHC) on August 1, 2011 and updated on March 30, 2015 and May 6, 2016. ESA received a response on May 20, 2016. The search of their Sacred Lands File identified tribal cultural resources in the vicinity of the project. The NAHC recommended that Katherine Erolinda Perez specifically, as well as other Tribes, be contacted for more information. A list of six Native American individuals and organizations that might have additional information or concerns was provided. The City sent letters to Native American individuals and organizations on May 31, 2016 requesting an opportunity to consult on the CIPs, which included improvements to water systems. No responses were received.

As described in Section 2.2.5 Cultural Resources, ESA completed a records search at the NWIC on August 1, 2011 (File No. 11-0118)[69] and updated the search on February 12, 2015 (File

[69] San José-Santa Clara Water Pollution Control Plant Master Plan Cultural Resources Survey Report.

No. 14-4014)[70] and May 11, 2016 (File No. 15-1655).[71] Six archaeological resources have been recorded within 2-miles of the Project area; all six are prehistoric occupation sites with midden soils, fire-affected rock, faunal remains, and/or Native American artifacts. At least two of the sites are known to contain human burials. None of these resources are located within the Project area; the nearest is approximately 1½-miles to the southeast. All of the sites are located in areas that would have historically been the habitable shoreline adjacent to the extensive marshland of the San Francisco Bay.

Discussion

a, b) **Less than Significant with Mitigation.** Based on the results of correspondence with the NAHC and the NWIC records search, no known tribal cultural resources listed or determined eligible for listing in the California Register, included in a local register of historical resources, or determined by the lead agency to be significant would be impacted by the proposed Project.

However, if any previously unrecorded archaeological resource were identified during Project implementation, particularly ground-disturbing construction activities, and were found to qualify as a tribal cultural resource pursuant to PRC Section 21074(a)(2), any impacts to the resource resulting from the proposed Project could be potentially significant. Any such potential significant impacts would be reduced to a less-than-significant level by implementing **Mitigation Measure CUL1.1: Inadvertent Discovery of Archaeological Resources, Mitigation Measure CUL-1.2: Mitigation Measure CUL-1.2: Inadvertent Discovery of Tribal Cultural Resource,** and **Mitigation Measure CUL 2: Inadvertent Discovery of Human Remains** (refer to Section 2.2.5).

---

70 San José-Santa Clara Regional Wastewater Facility Zanker Road Development Area Cultural Resources Survey Report.

71 San José-Santa Clara Regional Wastewater Facility Cogeneration Project Cultural Resources Study.

2.2.7 Geology, Soils, and Seismicity

Issues (and Supporting Information Sources):	*Potentially Significant Impact*	*Less Than Significant with Mitigation Incorporated*	*Less Than Significant Impact*	*No Impact*
6. GEOLOGY and Soils — Would the project:				
a) Expose people or structures to potential substantial adverse effects, including the risk of loss, injury, or death involving:				
i) Rupture of a known earthquake fault, as delineated on the most recent Alquist-Priolo Earthquake Fault Zoning Map issued by the State Geologist for the area or based on other substantial evidence of a known fault? (Refer to Division of Mines and Geology Special Publication 42.)	☐	☐	☒	☐
ii) Strong seismic ground shaking?	☐	☐	☒	☐
iii) Seismic-related ground failure, including liquefaction?	☐	☐	☒	☐
iv) Landslides?	☐	☐	☒	☐
b) Result in substantial soil erosion or the loss of topsoil?	☐	☐	☒	☐
c) Be located on a geologic unit or soil that is unstable, or that would become unstable as a result of the project, and potentially result in on- or off-site landslide, lateral spreading, subsidence, liquefaction, or collapse?	☐	☐	☒	☐
d) Be located on expansive soil, as defined in Table 18-1-B of the Uniform Building Code (1994), creating substantial risks to life or property?	☐	☐	☒	☐
e) Have soils incapable of adequately supporting the use of septic tanks or alternative waste water disposal systems where sewers are not available for the disposal of waste water?	☐	☐	☐	☒

Setting

The Project area is located near the southern end of the San Francisco Bay, which is within the geologically complex California Coast Ranges geomorphic province.[72,73] The Coast Ranges province is characterized by a series of northwest-trending ridges and valleys that run roughly parallel to the San Andreas Fault Zone, and can be further divided into the northern and southern ranges that area separated by the San Francisco Bay. The San Francisco Bay lies within a broad depression created from an east-west expansion between the San Andreas and Hayward fault systems. The tectonic forces that dominate the region developed from the margin between Pacific Plate and the North American Plate where the Pacific Plate slowly creeps northward past the North American Plate on the San Andreas, Hayward, and associated subsidiary faults.

72 California's geomorphic provinces are naturally defined geologic regions that display a distinct landscape or landforms with unique, defining features based on geology, faults, topographic relief, and climate.

73 California Geological Survey. *California's Geomorphic Provinces*, CGS Note 36, 2002.

Topography of the Project area ranges from the levee top, which is between elevations 11 and 12.5 feet (NAVD88), to elevation -5 feet NAVD88 at the bottom of Artesian Slough.

The native soils underlying the Pond A18 levee and its surroundings consist of Bay Mud. The levee itself was initially constructed from those muds and has been raised and topped as needed over time with a mixture of soil types from native and imported materials. In general, Bay Mud materials have a moderate shrink-swell potential due to the presence of saturated clays with high plasticity. However, shrink-swell potential on site is expected to be controlled by the tie rods and walers that are part of the levee repair.

The Project area lies within a region of California that contains many active and potentially active faults and is considered an area of high seismic activity. It is estimated that the Bay Area has a whole has a 63 percent chance of experiencing and earthquake of magnitude 6.7 or higher before 2036.[74] The individual faults posing the greatest threat to the Bay Area including the Project area are the Hayward-Rodger's Creek Fault and the San Andrea Fault Zone. Other principal faults capable of producing significant earthquakes in the general vicinity of the Project area include the Calaveras, Concord-Green Valley, Marsh Creek-Greenville, and the San Gregorio Faults. The concealed Quaternary age Silver Creek Fault runs just southeast of the Project area. However, the Project area is not located on or immediately adjacent to any active faults.

Discussion

a.i) **Less than Significant Impact.** No faults zoned under the Alquist-Priolo Earthquake Fault Zoning Act, or any other Holocene-active faults pass through the Project area. As noted, the deeply buried Silver Creek Fault lies beneath hundreds of feet of mud and sediment and the probability of rupture on the fault is remote. The potential for rupture of an unknown fault on site is considered remote. More importantly, the proposed Project would not involve building a structure, bringing people to this location or otherwise increasing exposure to risks from geological hazards. This impact would be less than significant.

a.ii, iii) **Less than Significant Impact.** As noted above, the Project area is located within a seismically active region. As a result, the proposed Project could be subject to strong seismic ground shaking, seismic failure, or liquefaction during an earthquake. Strong seismic shaking could occur as a result of seismic activity along any of the faults noted above. However, the proposed Project would incorporate standard engineering and construction techniques related to seismicity. Adherence to these practices and requirements would minimize potential impacts of strong seismic ground shaking, seismic-related ground failure, and liquefaction on site. These impacts would be less than significant.

a.iv) **Less than Significant Impact.** The Project area has very limited topographic relief, with elevation on site spanning a differential of less than 20 feet. Therefore, potential for

[74] U.S. Geologic Survey. *Forecasting California's Earthquakes – What Can We Expect in the Next 30 Years?* Prepared by Edward H. Field, Kevin R. Milner, and the 2007 Working Group on California Earthquake Probabilities, USGS Fact Sheet 2008-3027.

landslides on site, including seismically induced landslides, is considered remote. The proposed Project would not involve building a structure, bringing people to this location or otherwise increasing exposure to risks from geological hazards. This impact would be less than significant.

b) **Less than Significant Impact.** The proposed Project construction would involve rehabilitating an existing levee that is being eroded away and would involve the placement of fill, sheet piles, walers, and tie rods to stabilize the levee. Potential for erosion and loss of sediment from the site during construction would be temporary and minimized via adherence to applicable permitting requirements, as discussed in greater detail in Section 2.2.10, Hydrology and Water Quality. After Project completion, the proposed Project would have a beneficial impact on preventing erosion and the loss of topsoil, by incorporating sheet piles and tie rods to stabilize the levee. This impact would be less than significant.

c) **Less than Significant Impact.** As noted previously, the Project area has relatively flat topography. Therefore, landslides are not anticipated on site. Liquefaction, subsidence, and soil collapse are existing risks already faced by the location of the pond and levee on Bay Mud. The proposed Project does not add to or change this existing risk or increase human exposure to it. Further, the potential for liquefaction to affect the proposed Project would be minimized via adherence to standard engineering and construction techniques related to seismicity. This impact would be less than significant.

d) **Less than Significant Impact.** Although native soils underlying the Project area may have moderate shrink-swell potential, the potential for adverse effects from these conditions is limited due to the placement of sheet piles, backfill, tie rods and walers to stabilize the existing levee, where the fill is anticipated to have limited shrink-swell potential. Additionally, adherence to standard engineering and construction techniques would further minimize potential effects of expansive soils on site. This impact would be less than significant.

e) **No Impact.** The proposed Project would not utilize septic systems or other alternative disposal systems for the disposal of wastewater. Therefore, no impact would occur.

2.2.8 Greenhouse Gas Emissions

Issues (and Supporting Information Sources):	Potentially Significant Impact	Less Than Significant with Mitigation Incorporated	Less Than Significant Impact	No Impact
7. GREENHOUSE GAS EMISSIONS — Would the project:				
a) Generate greenhouse gas emissions, either directly or indirectly, that may have a significant impact on the environment?	☐	☐	☒	☐
b) Conflict with an applicable plan, policy, or regulation adopted for the purpose of reducing the emissions of greenhouse gases?	☐	☐	☒	☐

Setting

Various gases in the Earth's atmosphere, classified as atmospheric greenhouse gases (GHGs), play a critical role in determining the Earth's surface temperature. Solar radiation enters the atmosphere from space and a portion of the radiation is absorbed by the Earth's surface. The Earth emits this radiation back toward space, but the properties of the radiation change from high-frequency solar radiation to lower frequency infrared radiation. GHGs, which are transparent to solar radiation, are effective in absorbing infrared radiation. As a result, this radiation that otherwise would have escaped back into space is retained, resulting in a warming of the atmosphere. This phenomenon is known as the greenhouse effect. Among the prominent GHGs contributing to the greenhouse effect, or climate change, are carbon dioxide (CO_2), methane (CH_4), ozone (O_3), water vapor, nitrous oxide (N_2O), chlorofluorocarbons (CFCs), and perfluorocarbons (PFCs). Human-caused emissions of these GHGs in excess of natural ambient concentrations are responsible for enhancing the greenhouse effect.

In 2011, the City adopted the *Envision San José 2040 General Plan* (General Plan). As part of the General Plan update, the City adopted the *Greenhouse Gas Reduction Strategy for the City of San José* (GHG Strategy)[75] in accordance with the BAAQMD CEQA Air Quality Guidelines and CEQA Guidelines Section 15183.5. The GHG Strategy identifies policies and measures to reduce GHG generation within the City. Relevant policies include:

> *MS-5.6:* Enhance the construction and demolition debris recycling program to increase diversion from the building sector.
>
> *MS-6.3:* Encourage the use of locally extracted, manufactured or recycled and reused materials including construction materials and compost.
>
> *MS-6.12:* Promote use of recycled materials, including reuse of existing building shells/ elements, as part of new construction or renovations.

[75] City of San Jose, 2011. *Greenhouse Gas Reduction Strategy for the City of San Jose*, June 2011. Updated December 2015. Available at http://www.sanjoseca.gov/documentcenter/view/9388.

Discussion

a) **Less than Significant Impact.** The City has adopted a GHG Strategy that includes policies and measures to reduce GHG emissions. Adoption of a GHG Strategy provides environmental clearance for GHG impacts of proposed development as per the BAAQMD CEQA Air Quality Guidelines[76] and CEQA Guidelines Section 15183.5. An evaluation of the proposed Project's GHG emissions is considered in light of City requirements through an evaluation of proposed Project conformance with the City's GHG Reduction Strategy.

Construction-related emissions associated with the proposed Project would be limited due to the relatively short duration of construction activities and modest intensity at the Project site. In addition, the BAAQMD has neither adopted nor recommended GHG thresholds for construction emissions in their CEQA Air Quality Guidelines. The City's GHG Strategy does not include measures to reduce emissions from construction equipment. Consequently, construction emissions from the proposed Project are expected to be consistent with the GHG Strategy; therefore, the proposed Project would have a less-than-significant impact associated with construction-related GHG emissions.

Because new operations associated with the proposed Project would be limited to vehicle use by staff for visual inspections approximately once per month, operational GHG emissions would be minimal, and operations would therefore be consistent with the City's GHG Strategy. Consequently, the proposed Project would have a less-than-significant impact associated with operational GHG emissions.

b) **Less than Significant Impact.** As described above, the City recently adopted the *Envision San José 2040 General Plan*, which focuses on creating urban centers that provide mixed-use settings for new housing and job growth that are pedestrian, bicycle, and transit-oriented. The mixed-use land use concept reduces GHG emissions by placing land uses closer together and, as a result, decreases vehicle miles traveled. The General Plan includes a number of actions to increase the use of recycled materials used during construction, and reduce construction and demolition debris. To ensure that the proposed Project would not conflict with the applicable GHG reduction policies of the General Plan, the proposed Project would comply with applicable General Plan Policies for reduction of GHG emissions, including MS-5.6 and MS-6.3. With implementation of these policies, the proposed Project would not conflict with any applicable plan, policy, or regulation adopted for the purpose of reducing the emissions of GHGs, since the proposed Project is consistent with the City's General Plan that includes implementation of a GHG Reduction Strategy. The impact would be less than significant.

---

76 Bay Area Air Quality Management District (BAAQMD), 2017. *CEQA Air Quality Guidelines*, revised May 2017. Available online at http://www.baaqmd.gov/~/media/files/planning-and-research/ceqa/ceqa_guidelines_may2017-pdf.pdf?la=en.

2.2.9 Hazards and Hazardous Materials

Issues (and Supporting Information Sources):	Potentially Significant Impact	Less Than Significant with Mitigation Incorporated	Less Than Significant Impact	No Impact
8. HAZARDS AND HAZARDOUS MATERIALS — Would the project:				
a) Create a significant hazard to the public or the environment through the routine transport, use, or disposal of hazardous materials?	☐	☐	☒	☐
b) Create a significant hazard to the public or the environment through reasonably foreseeable upset and accident conditions involving the release of hazardous materials into the environment?	☐	☒	☐	☐
c) Emit hazardous emissions or handle hazardous or acutely hazardous materials, substances, or waste within one-quarter mile of an existing or proposed school?	☐	☐	☐	☒
d) Be located on a site which is included on a list of hazardous materials sites compiled pursuant to Government Code Section 65962.5 and, as a result, would it create a significant hazard to the public or the environment?	☐	☐	☐	☒
e) For a project located within an airport land use plan or, where such a plan has not been adopted, within two miles of a public airport or public use airport, would the project result in a safety hazard for people residing or working in the project area?	☐	☐	☐	☒
f) For a project within the vicinity of a private airstrip, would the project result in a safety hazard for people residing or working in the project area?	☐	☐	☐	☒
g) Impair implementation of or physically interfere with an adopted emergency response plan or emergency evacuation plan?	☐	☐	☐	☒
h) Expose people or structures to a significant risk of loss, injury, or death involving wildland fires, including where wildlands are adjacent to urbanized areas or where residences are intermixed with wildlands?	☐	☐	☒	☐

Setting

This discussion of the potential presence of hazardous materials at the Project area is based on the results of regulatory agency database searches using the California State Water Resources Control Board (SWRCB) GeoTracker database[77] and the California Department of Toxic Substances Control (DTSC) EnviroStor database,[78] and review of prior documentation completed for the RWF in support of the Plant Master Plan EIR. The GeoTracker database includes the following hazardous materials site lists: leaking underground storage tank (LUST) cleanup sites; spills, leaks, investigation and cleanup (SLIC) sites; permitted underground storage tank (UST) facilities; land disposal sites; military cleanup sites; and other cleanup sites. The EnviroStor database includes: federal Superfund; state response; voluntary cleanup; school cleanup; and hazardous waste corrective action. Nearby landfill facilities were identified by the database

[77] State Water Resources Control Board, GeoTracker database, available online at http://geotracker.swrcb.ca.gov, accessed June 29, 2017.

[78] California Department of Toxic Substances Control (DTSC), EnviroStore database, http://envirostor.dtsc.ca.gov, accessed June 29, 2017.

searches. The adjacent landfill facilities are listed on the land disposal site lists. Based on the records search and listed locations of the sites, as well as a review of previously compiled information in support of the Plant Master Plan EIR, the Project area does not contain any hazardous materials sites. The San José Police Department operates a bomb disposal facility within the inactive biosolids lagoons area, located to the southeast of the Project area.

Wildfire Hazards

Based upon fire hazard mapping by the CAL FIRE Forest Resource Assessment Program[79] and the Santa Clara County Wildland Urban Fire Interface Map,[80] the Project area is not located within identified high fire hazard areas.

Airports

The nearest airports to the Project are the Norman Y. Mineta San José International Airport, located over 4 miles south of the Project area and the Moffett Federal Airfield, located over 4 miles southwest of the Project area. No private airstrips occur in the Project vicinity.

Emergency Response

The Santa Clara County Operational Emergency Operations Plan[81] established emergency organization, assigns tasks, specifies policies and general procedures, and provides for coordination of response in the event of an emergency. The plan does not identify specific emergency response or evacuation routes. The levee is not located on a road and would not be used for emergency response or as an evacuation route.

Discussion

a) **Less than Significant Impact.** Project construction could involve the routine use of small quantities of hazardous materials commonly used during construction activities such as fuels, lubricants and oil for construction equipment. Storage and use of hazardous materials at the construction site during routine use could result in the accidental release of small quantities of hazardous materials, which could degrade soil and/or surface water within the Project area.

However, the Project would be subject to the requirements of the San Francisco Bay Region Municipal Regional Stormwater NPDES Permit (Order Number R2-2015-0049; 2015), which contains requirements for construction site control and water quality protection measures. The Project would also seek and obtain a Clean Water Act Section 401 Water Quality certification from the San Francisco Regional Water Quality Control

79 California Department of Forestry and Fire Protection, Fire and Resource Assessment Program, Fire Hazard Severity Zones in State Responsibility Areas, Santa Clara County, California, November 7, 2007. http://frap.fire.ca.gov/webdata/maps/santa_clara/fhszs_map.43.pdf accessed June 29, 2017; California Department of Forestry and Fire Protection, Fire and Resource Assessment Program, Very Fire Hazard Severity Zones in Local Responsibility Areas, Santa Clara County, California. May 2008. http://frap.fire.ca.gov/webdata/maps/santa_clara/fhszl_map.43.pdf accessed June 29, 2017.

80 Santa Clara County Planning Office, *Santa Clara County Wildland Urban Interface Fire Area*, Adopted February 24, 2009.

81 Santa Clara County, 2008, *Santa Clara County Operational Area Emergency Operations Plan*, March 18, 2008, available online at http://www.sccgov.org/sites/oes/Documents/EOP_Complete.pdf

Board. Permit conditions would include implementation of best management practices (BMPs) to minimize the risk of a hazardous materials release during construction activities. The BMPs would include protection measures for the temporary on site storage of fuel and other hazardous materials used during construction, including requirements for secondary containment and berming to prevent any such release from reaching an adjacent waterway. All equipment and materials storage would need to be routinely inspected for leaks, and records maintained for documenting compliance with the storage and handling of hazardous materials. Thus, potential adverse effects related to the routing use and possible release of hazardous construction chemicals into the environment would be minimized. This impact would be less than significant.

b) **Less than Significant Impact with Mitigation.** The proposed Project would involve limited excavation into the top few feet of an existing levee, to allow the installation of 10 tie rods. The project has been a levee since the 1950s with no development other than the current Stage Gate that was constructed 13 years ago. No documented evidence was found to indicate that the soil in the levee contains hazardous materials that could impact construction workers or the surrounding environment. The potential to encounter contaminated soil or to otherwise accidentally release hazardous materials into the environment is very low. The implementation of **Mitigation Measure HYD-1: Low impact Construction Practices** would further reduce this risk to a level that would be les than significant.

c) **No Impact.** There are no schools within 0.25-mile of the Project area. Therefore, there would be no impact.

d) **No Impact.** The Project site is not listed on a regulatory agency list of hazardous materials sites nor are there any sites within 0.25 miles of the Project site. There would be no impact.

e) **No impact.** The nearest airports to the Project are the Norman Y. Mineta San José International Airport, located approximately 4.5 miles south of the Project area and the Moffett Federal Airfield, located approximately 5 miles southwest of the Project area. Because the Project area is more than two miles from an airport, and because implementation of the proposed Project would not involve the construction of new facilities and would not interfere with air traffic, there would be no impact related to safety hazards in the vicinity of an airport. Therefore, there would be no impact.

f) **No Impact.** There are no private airstrips within two miles of the Project area. Therefore, there would be no impact.

g) **No Impact.** Santa Clara County does not have an adopted emergency response plan or emergency evacuation plan that designates specific emergency response or evacuation routes within the Project area. More importantly, the levee is not a road and would not be used for emergency response or as an evacuation route. There would be no impact.

h) **Less than Significant Impact.** The Project area is not within a high fire hazard area and, in the unlikely event of a fire, the potential to expose people or structures to a significant risk involving fires is low. The use of construction equipment and the possible temporary on site storage of fuels and/or other flammable construction chemicals could pose an increased fire risk resulting in injury to workers or the public during construction. In the event that a fire was to spread to the existing bomb disposal facility located east of the Project site, a hazardous condition could occur. However, contractors would be required to comply with hazardous materials storage and fire protection regulations, which would minimize the potential for fire. Therefore, this impact would be less than significant.

2.2.10 Hydrology and Water Quality

Issues (and Supporting Information Sources):	Potentially Significant Impact	Less Than Significant with Mitigation Incorporated	Less Than Significant Impact	No Impact
9. HYDROLOGY AND WATER QUALITY — Would the project:				
a) Violate any water quality standards or waste discharge requirements?	☐	☒	☐	☐
b) Substantially deplete groundwater supplies or interfere substantially with groundwater recharge such that there would be a net deficit in aquifer volume or a lowering of the local groundwater table level (e.g., the production rate of pre-existing nearby wells would drop to a level which would not support existing land uses or planned uses for which permits have been granted)?	☐	☐	☐	☒
c) Substantially alter the existing drainage pattern of the site or area, including through the alteration of the course of a stream or river, in a manner which would result in substantial erosion or siltation on- or off-site?	☐	☐	☐	☒
d) Substantially alter the existing drainage pattern of the site or area, including through the alteration of the course of a stream or river, or substantially increase the rate or amount of surface runoff in a manner that would result in flooding on- or off-site?	☐	☐	☒	☐
e) Create or contribute runoff water that would exceed the capacity of existing or planned stormwater drainage systems or provide substantial additional sources of polluted runoff?	☐	☐	☒	☐
f) Otherwise substantially degrade water quality?	☐	☒	☐	☐
g) Place housing within a 100-year flood hazard area as mapped on a federal Flood Hazard Boundary or Flood Insurance Rate Map or other flood hazard delineation map?	☐	☐	☐	☒
h) Place within a 100-year flood hazard area structures that would impede or redirect flood flows?	☐	☐	☒	☐
i) Expose people or structures to a significant risk of loss, injury or death involving flooding, including flooding as a result of the failure of a levee or dam?	☐	☐	☐	☒
j) Inundation by seiche, tsunami, or mudflow?	☐	☐	☒	☐

Setting

The San Francisco Bay Area including the Project area and its vicinity, experiences a Mediterranean climate characterized by mild, wet winters and dry, warm summers. The South Bay typically receives about 90 percent of its precipitation in the fall and winter months, with the greatest average rainfall occurring in January. The average annual rainfall in the counties surrounding the South Bay is approximately 20 inches, although the actual rainfall can be highly variable due to El Niño (wet) and La Niña (dry) years and the influence of local topography.

The nearest surface waters to the Project area include Artesian Slough, Pond A18, Coyote Creek, south San Francisco Bay as well as other sloughs, marshes, and ponds associated with the

southern margin of the Bay. Stormwater on the Project site would drain into the surrounding Artesian Slough and Pond A18.

The Project area would be located entirely within a 100-year flood zone, defined by the Federal Emergency Management Agency (FEMA), as an area having a 1-percent annual chance of occurrence for flooding.

Regulatory Framework

San Francisco Bay Region Municipal Regional Stormwater NPDES Permits

In 2015, the San Francisco Bay Regional Water Quality Control Board (RWQCB) issued a regional National Pollutant Discharge Elimination System (NPDES) permit (NPDES Order R2-2015-0049 [which updated a prior Order R2-2009-0074], NPDES Permit No. CAS612008) for stormwater consolidating requirements for all Bay Area municipalities and flood control agencies that discharge directly to the San Francisco Bay. Permit conditions would require BMPs to control and prevent sediment and contaminants from reaching surface waters and would include post-development stormwater runoff through source control, site design, and treatment control BMPs.

The treated wastewater discharges from the WPCP are regulated under Order No. R2-2009-0038 and NPDES Permit No. CA0037842 issued by the San Francisco Bay RWQCB. The NPDES permit also covers stormwater discharges from within the WPCP. The proposed Project would not affect those discharges.

Waste Discharge Requirements

The north and south levee gates are operated by the RWF under the existing Waste Discharge Requirements described in the San Francisco Bay RWQCB Order Number R2-2005-0003.

Clean Water Act Section 401 Water Quality Certification

Procurement and adherence to a Clean Water Act Section 401 Water Quality Certification from the San Francisco RWQCB would also occur. Direct impacts to waters of the United States (U.S.) are addressed in Section 2.2.4, Biological Resources.

Construction General Permit Order 2009-0009-DWQ

Dischargers are required to obtain coverage under the General Permit for Discharges of Storm Water Associated with Construction Activity Construction General Permit Order 2009-0009-DWQ if their projects disturb one or more acres of soil, or disturb less than one acre but are part of a larger common plan of development that in total disturbs one or more acres.[82] Because the Project does not fall under these requirements, coverage under the Construction General Permit is not required.

82 State Water Resources Control Board, Construction Storm Water Program, updated April 11, 2017. Available online at http://www.waterboards.ca.gov/water_issues/programs/stormwater/construction.shtml. Accessed on July 28, 2017.

Discussion

a, f) **Less than Significant with Mitigation.** Construction of the proposed Project would involve the use of heavy construction machinery on site, including for the grading or leveling of soils, placement of fill, excavation for the placement of tie rods, and installation of Project components. Though heavy equipment would operate from dry areas only, these activities still could result in potential for the accidental release of sediment and construction related water quality pollutants from the Project area. For example, during storms, surface soils and sediment loosened during the construction process could become entrained in stormwater, resulting in erosion on site, increases in sediment loading off site, and potential for sedimentation downstream. Other construction-related water quality pollutants could also become entrained in stormwater, including pollutants associated with heavy construction equipment such as oils, greases, fuels, antifreeze, and other lubricants, as well as other construction related pollutants such as construction related debris. If entrained in stormwater, these pollutants could be carried off site and affect downstream waters. No additional impervious surfaces are proposed as a part of the Project.

Impacts related to potential construction period water quality degradation would, however, be permitted via the procurement and adherence to a Clean Water Act Section 401 Water Quality Certification from the San Francisco RWQCB. The proposed Project would also be subject to the requirements of the San Francisco Bay Region Municipal Regional Stormwater NPDES Permit. Together, these regulations would require the implementation of construction period BMPs to reduce and minimize construction related stormwater pollution, construction period water quality monitoring for all discharges, and implementation of various industrial site controls designed to minimize and reduce the emission of polluted stormwater from the Project area. The City would be bound to comply with these requirements under state law. To comply with State of California law, the City would be required to prepare and implement a Water Quality Evaluation and Control Plan for Pond A18 and procure a Section 401 Water Quality Certification, as described below**.** Implementation of these BMPs and compliance with state laws, along with the implementation of **Mitigation Measure HYD-1: Low impact Construction Practices**, would reduce any potentially significant impacts to water quality to less than significant.

During design of salt pond restoration and prior to breaching of Pond A18 levees, the City, in coordination with other agencies directly involved in planning and implementing Pond A18 restoration, would be required to prepare and implement a Water Quality Evaluation and Control Plan for Pond A18 for the proposed levee removal and associated pond restoration activities. The Water Quality Evaluation would evaluate anticipated construction activities and anticipated changes to pond area and nearby hydrodynamics, and evaluate their potential to influence the following water quality parameters at a minimum: temperature, salinity, dissolved oxygen, metals, mercury, methyl mercury, phytoplankton blooms, and nuisance algae. The Water Quality Evaluation would consider applicable water quality standards and goals defined in the Water Quality Control Plan

(Basin Plan) for the San Francisco Bay Basin and other applicable water quality standards, and would provide recommendations for the minimization of each category of potential water quality pollutants described above, sufficient to ensure that downstream beneficial uses would not be adversely affected, and that applicable water quality standards would not be exceeded.

In addition, the City would be required to procure a Section 401 Water Quality Certification from the San Francisco RWQCB. In reviewing a request for such a certification, the RWQCB would require that sufficient information about the proposed Project be included in the application package to allow the RWQCB to certify that all state water quality standards would be met.

Compliance with the above-described regulations and implementation of **Mitigation Measure HYD-1** would result in a less-than-significant impact.

Mitigation Measure HYD-1: Low Impact Construction Practices.

Environmental Services Department (ESD) staff or contractor shall implement the following construction practices to reduce construction-related water quality impacts:

- Prior to construction, ESD or its contractor shall hired a hazardous material specialist, or qualified environmental professional to monitor ground disturbance activities at proposed construction work areas for potential contamination. Heavy equipment shall be operated from dry areas only; no equipment shall operate in water.

- Ecological screening criteria for fill: During construction activities, if the hazardous material specialist suspects a potential for contaminated soil (e.g., odors or stained soil indicative of contamination) from the local material from the project area, all construction activities in the disturbed soil area shall be halted and the construction contractor/ hazardous material specialist shall ensure that any fill used in conjunction with the proposed Project will satisfy ecological screening criteria in the RWQCB's "Draft Staff Report, Beneficial Reuse of Dredged Materials: Sediment Screening and Testing Guidelines"[83], in order to avoid the introduction of contaminants.

- If imported soil or sediment is not expected to be used, but if it is, it shall meet the standards for wetland surface material in the RWQCB's "Draft Staff Report, Beneficial Reuse of Dredge Materials: Sediment Screening and Testing Guidelines.

- Portions of construction work involve placing sheet piles and rock backfill material in water and may create brief and localized turbidity within Artesian Slough and Pond A18, then sheet piles shall be placed at low tides whenever

[83] San Francisco Bay Regional Water Quality Control Board. 2000. Draft Staff Report – Beneficial Reuse of Dredged Materials: Sediment Screening and Testing Guidelines. Oakland, California. May 2000. Available at < http://www.waterboards.ca.gov/sanfranciscobay/water_issues/programs/dredging/beneficialreuse.pdf>.

practicable to reduce the amount and duration of increased turbidity and only a portion of the sheet pile rows shall be placed into water.

- Rock backfill material shall require certification that the material is virgin or has been tested and free of contaminants from a qualified vendor prior to use in construction activities.

- All construction materials and debris shall be contained by using BMPS, including silt fences, straw wattles, and gravel bags, during construction and removed after construction is completed.

b) **No Impact.** The proposed Project would not involve pumping or extraction of groundwater, and therefore would not directly result in the drawdown of groundwater levels nor would the proposed Project involve the construction of new impervious surfaces. Therefore, no impact would occur.

c) **No Impact.** The proposed Project would not alter existing drainage through the alteration of the course of a stream or river. The proposed Project would involve reconstructing the levee to its original footprint with the installation of sheet piles to prevent further erosion and siltation of the levee. Therefore, no impact would occur.

d, e) **Less than Significant Impact.** The proposed Project would involve reconstructing the levee to its original footprint and would not result in the installation of new impervious surfaces that could alter the existing drainage pattern. Without the levee repair proposed under the Project, flows through Artesian Slough and Pond A18 would be subject to altered flows from a future failure of a Pond A18 levee. Following Project implementation, stormwater on the Project site would drain into the surrounding Artesian Slough and Pond A18 as it currently does and as it did prior to the levee began eroding. In addition, with compliance with the requirements of the previously discussed Water Quality Evaluation and Control Plan for Pond A18 and Section 401 Water Quality Certification, the potential impacts from modified drainage or runoff would be kept at a level that would not cross a significance threshold. Therefore, this impact would be less than significant.

g) **No Impact.** The proposed Project would not involve the construction of any housing. Therefore, no impact would occur.

h) **Less than Significant Impact.** The proposed Project would be located entirely within a FEMA-defined 100-year flood zone. Flooding would be associated with run-up from the south San Francisco Bay. However, the proposed Project would only involve reconstructing the levee to its original footprint and no new facilities would be installed and displacement of flood waters would be negligible. Therefore, this impact would be less than significant.

i) **No Impact**. The proposed Project would involve reconstructing the levee to its original footprint to prevent the risk of a future levee breach that would cause uncontrolled flows of water out of Pond A18. A breach would also allow uncontrolled tidal flooding into

Pond A18 and expose over 9,000 feet of non-engineered levees on the south side of the pond to erosive tidal and wave actions, as well as severely limit access for emergency repairs. The southern levees are a critical, last layer of protection against tidal flooding to RWF that would be directly threatened if compromised by tidal action. There would be no adverse impact from the repair, which would actually be a beneficial project outcome with regard to this significance criterion.

j) **Less than Significant Impact.** The proposed Project is not located immediately adjacent to an enclosed water body, such that it could be affected by seiche. Additionally, the proposed Project is not located in an area that is considered susceptible to mudflows, such as downstream of high relief areas denuded of vegetation, or near potential volcanic activity. The proposed Project is located in a lowlands area adjacent to south San Francisco Bay, and could theoretically be subject to tsunami related hazards. Because the characteristic seiche periods of the Bay are significantly longer than surface wave periods for waves caused by earthquakes, earthquake-caused local tsunamis are not considered to pose a hazard to the Project area.[84] When a suite of tsunami events, including local tsunamis and teletsunamis (tsunamis originating from distant points in the Pacific Ocean), were modeled in support of the Plant Master Plan EIR,[85] the combined upper bound of tsunami inundation at mean high water was at the northeast corner of Pond A18, located north of the Project area along the margin of the south San Francisco Bay.[86] No inundation was shown within the Project area. This was due to dampening effects of Bay geography as an incoming tsunami passed through the Golden Gate and dissipated across the central and south portions of the Bay. Therefore, tsunamis would not affect the Project area. This impact would be less than significant.

---

84 Borrero, J.C., Dengler, L., Uslu, B. and Synolakis, C., *Numerical Modeling of Tsunami Effects at Marine Oil Terminals in San Francisco Bay*, Marine Fisheries Division of The California State Lands Commission, 2006.

85 City of San José. San José/Santa Clara Water Pollution Control Plant Master Plan Final Environmental Impact Report. November, 2013.

86 California Emergency Management Agency, California Geological Survey, and University of Southern California, 2009, Tsunami Inundation Map for Emergency Planning. Milpitas Quadrangle. July 31.

2.2.11 Land Use and Land Use Planning

Issues (and Supporting Information Sources):	Potentially Significant Impact	Less Than Significant with Mitigation Incorporated	Less Than Significant Impact	No Impact
10. LAND USE AND LAND USE PLANNING — Would the project:				
a) Physically divide an established community?	☐	☐	☐	☒
b) Conflict with any applicable land use plan, policy, or regulation of an agency with jurisdiction over the project (including, but not limited to the general plan, specific plan, local coastal program, or zoning ordinance) adopted for the purpose of avoiding or mitigating an environmental effect?	☐	☐	☒	☐
c) Conflict with any applicable habitat conservation plan or natural community conservation plan?	☐	☐	☐	☒

Setting

The proposed Project would be located on the east side of Artesian Slough, the west side of Pond A18, and northwest of the RWF. Pond A18 is part of the RWF system and is used to manage water quality in adjacent Artesian Slough. The South Gate portion of the Pond A18 levee is used to contain the pond water, and the gate structure itself can be used for either intake or discharge of pond water. The proposed Project would repair the eroding levee and would not change any existing or future land uses.

Discussion

a) **No Impact.** The proposed Project would not include any construction within or near an established community, and therefore would not physically divide or interfere with any established community. No impact would occur.

b) **Less than Significant Impact.** With respect to City zoning districts, the Project site is zoned as an Agricultural District. With respect to the City's General Plan Land Use/Transportation Diagram designation, the Project site is designated as open space, parklands, and habitat where the levee faces Pond A18 and as Public/Quasi Public where the levee faces the Artesian Slough.[87] The proposed Project would not add additional facilities to the site and would therefore be consistent with existing zoning and land use designation applicable to the Project area. The impact would be less than significant.

c) **No Impact.** The Project area is situated outside of the Santa Clara Valley Habitat Plan (SCVHP) study area, and therefore the proposed Project is not a covered activity under the SCVHP. The proposed Project is within the Expanded Study Area for Burrowing Owl Conservation, as defined in the SCVHP, wherein the burrowing owl is a covered species under the SCVHP. However, the proposed Project would not result in impacts to burrowing owl nesting or foraging habitat because there is no burrowing owl habitat at the site (as discussed in Section 2.2.4, Biological Resources). Therefore, the Project would not conflict with the SCVHP. No other habitat conservation plans or natural

[87] City of San José, 2011. *Envision San Jose 2040 General Plan*, November 2011.

community conservation plans are applicable to the Project area. Therefore, no impact would occur.

2.2.12 Mineral Resources

Issues (and Supporting Information Sources):	*Potentially Significant Impact*	*Less Than Significant with Mitigation Incorporated*	*Less Than Significant Impact*	*No Impact*
11. MINERAL RESOURCES — Would the project:				
a) Result in the loss of availability of a known mineral resource that would be of value to the region and the residents of the state?	☐	☐	☐	☒
b) Result in the loss of availability of a locally-important mineral resource recovery site delineated on a local general plan, specific plan, or other land use plan?	☐	☐	☐	☒

Setting

The Project area is not within an aggregate resource area, and is mapped by the California Division of Mines and Geology as being within an "area not classified" as a Mineral Resource Zone.[88,89] Both published geologic maps and site-specific borings confirm that subsurface materials are generally too fine-grained to be suitable as aggregate. Additionally, according to the USGS Mineral Resources Data System, there are no known mineral occurrences, prospects, or past or present mineral producers within or immediately adjacent to the Project area.[90]

Moreover, the Project site is part of the RWF, which is an existing facility already using the pond and levee for its approved purposes that do not involve any mining or mineral extraction. The proposed repairs would not change those uses or otherwise change the current or future availability of mineral resources.

Discussion

a, b) **No Impact.** As noted above, no known mineral resources of importance to the state or region are located on site. Additionally, no locally important mineral resource recovery sites are delineated for the Project area, including in a general plan or other land use plan. Therefore, the proposed Project would not result in the loss of availability of mineral resources, or otherwise interfere with the extraction of existing mineral resources. No impact would occur.

---

88 California Geological Survey (CGS), 1987. *Mineral Land Classification: Aggregate Materials in the San Francisco – Monterey Bay Area*. DMG Special Report 146 part II.

89 California Division of Mines and Geology. *Update of Mineral Land Classification: Aggregate Materials in the South San Francisco Bay Production- Consumption Region*. DMG Open File Report 96-03, 1996.

90 U.S. Geologic Survey, *Mineral Resources Data System (MRDS), Mineral Resources On-Line Spatial Data*, available http://mrdata.usgs.gov/mineral-resources/mrds-us.html. Accessed 4/10/2017.

2.2.13 Noise

Issues (and Supporting Information Sources):	*Potentially Significant Impact*	*Less Than Significant with Mitigation Incorporated*	*Less Than Significant Impact*	*No Impact*
12. NOISE — Would the project result in:				
a) Exposure of persons to or generation of, noise levels in excess of standards established in the local general plan or noise ordinance, or applicable standards of other agencies?	☐	☐	☒	☐
b) Exposure of persons to or generation of excessive groundborne vibration or groundborne noise levels?	☐	☐	☒	☐
c) A substantial permanent increase in ambient noise levels in the project vicinity above levels existing without the project?	☐	☐	☐	☒
d) A substantial temporary or periodic increase in ambient noise levels in the project vicinity above levels existing without the project?	☐	☐	☒	☐
e) For a project located within an airport land use plan or, where such a plan has not been adopted, within two miles of a public airport or public use airport, would the project expose people residing or working in the project area to excessive noise levels?	☐	☐	☒	☐
f) For a project located in the vicinity of a private airstrip, would the project expose people residing or working in the project area to excessive noise levels?	☐	☐	☐	☒

Setting

There are no noise sensitive receptors (e.g., residences, schools) in the immediate vicinity of the Project area. The closest sensitive receptors to the Project area are residences and churches/worship centers located in the community of Alviso (part of the City of San José, about 0.75 miles away). The proposed Project would have no operational noise-related impacts, so this section only discusses construction noise.

Applicable Noise Standards and Policies

The City's General Plan includes policies applicable to all development projects in San José.[91] The City's noise and land use compatibility guidelines are shown in **Table 2-3**, below. The land use compatibility guidelines state that the City's normally acceptable exterior noise level is 60 A-weighted decibels (dBA) day-night noise level (DNL) or less for residential and most institutional land uses. The City's standard for interior noise levels for residences, hotels, motels, and residential care facilities is 45 dBA DNL.

[91] City of San José, 2011. *Envision San Jose 2040 General Plan*, November 2011.

TABLE 2-3
PROPOSED GENERAL PLAN LAND USE COMPATIBILITY GUIDELINES FOR COMMUNITY NOISE IN SAN JOSÉ
(GP TABLE EC-1)

Land Use Category	Exterior DNL Value in Decibels 55 60 65 70 75 80
Residential, Hotels and Motels, Hospitals and Residential Care[1]	
Outdoor Sports and Recreation, Neighborhood Parks and Playgrounds	
Schools, Libraries, Museums, Meeting Halls, and Churches	
Office Buildings, Business Commercial, and Professional Offices	
Sports Arena, Outdoor Spectator Sports	
Public and Quasi-Public Auditoriums, Concert Halls, and Amphitheaters	

[1]Noise mitigation to reduce interior noise levels pursuant to Policy EC-1.1 is required.

Normally Acceptable:
Specified land use is satisfactory, based upon the assumption that any buildings involved are of normal conventional construction, without any special noise insulation requirements.

Conditionally Acceptable:
Specified land use may be permitted only after detailed analysis of the noise reduction requirements and noise mitigation features included in the design.

Unacceptable:
New construction or development should generally not be undertaken because mitigation is usually not feasible to comply with noise element policies. Development will only be considered when technically feasible mitigation is identified that is also compatible with relevant design guidelines.

SOURCE: City of San José, 2011. *Envision San Jose 2040 General Plan*, Table EC-1, November 2011.

The following General Plan policies establish the thresholds to be used in the determination of the significance of environmental impacts related to noise and vibration.

1. *Policy EC-1.2:* Minimize the noise impacts of new development on land uses sensitive to increased noise levels [Categories 1, 2, 3 and 6] by limiting noise generation and by requiring use of noise attenuation measures such as acoustical enclosures and sound barriers, where feasible. The City considers significant noise impacts to occur if a project would:

    a. Cause the DNL at noise sensitive receptors to increase by 5 dBA DNL or more where the noise levels would remain "Normally Acceptable"; or

    b. Cause the DNL at noise sensitive receptors to increase by 3 dBA DNL or more where noise levels would equal or exceed the "Normally Acceptable" level.

2. *Policy EC-1.3:* Mitigate noise generation of new nonresidential land uses to 55 dBA DNL at the property line when located adjacent to existing or planned noise sensitive residential and public/quasi-public land uses.

3. *Policy EC-1.7*: Require construction operations within San José to use best available noise suppression devices and techniques and limit construction hours near residential uses per the

City's Municipal Code. The City considers significant construction noise impacts to occur if a project located within 500 feet of residential uses or 200 feet of commercial or office uses would:

- Involve substantial noise generating activities (such as building demolition, grading, excavation, pile driving, use of impact equipment, or building framing) continuing for more than 12 months.

4. *Policy EC-2.3:* Require new development to minimize vibration impacts to adjacent uses during demolition and construction. A vibration limit of 0.20 in/sec peak particle velocity (PPV) would be used to minimize the potential for cosmetic damage at buildings of normal conventional construction.

In addition to the above General Plan policies, the proposed Project would be subject to the following code and ordinance:

- *San José Municipal Code §20.100.450*: Limits construction hours within 500 feet of residences to 7 AM - 7 PM weekdays, with no construction on weekends or holidays; and

- *City of San José Zoning Ordinance*: The City Zoning Ordinance applies specific noise standards to Residential Zoning Districts, which limits the sound pressure levels generated by any use or combination of uses at any property line to a maximum noise level of 55 dBA.

Discussion

a), d) **Less than Significant Impact.** Based on the following, construction of the proposed Project would not expose persons to noise levels in excess of regulatory standards, codes or ordinance. Operations associated with the proposed Project would be limited to vehicle use by staff for visual inspections approximately once per month. Therefore, the associated impact would be less than significant.

Construction is a temporary source of noise that can impact residences and businesses located near construction sites. Construction noise can be considerable for short periods of time at any particular location and typically generates the highest noise levels during grading, excavation, and vibratory pile driving. However, there are no residences, hospitals, schools, or churches close to the Project area. The closest existing residential and commercial uses are more than one-half mile away. The nearest noise-sensitive receptors are expected to be the trail users at the Don Edwards San Francisco Bay National Wildlife Refuge, the nearest point of which is approximately 500 feet away. The nearest part of the Refuge's Environmental Education Center parking lot is 750 feet away.

Worst-case Project construction noise exposure at the closest existing residences and commercial uses would not be expected to exceed noise standards. This is based on a conservative assumption that vibratory pile driving (the loudest construction activity in the proposed Project) would result in a noise production of up to 96 dBA L_{max} at 50 feet.[92] Assuming a 7.5 dB per doubling of distance drop-off rate and a reference noise level of 96 dBA L_{max} from a distance of 50 feet, sensitive land uses located 1,600 feet

[92] Federal Transit Administration, 2006. *Transit Noise and Vibration Impact Assessment*, May 2006.

from the Project site would be exposed to a maximum noise level of 58 dBA during onsite vibratory hammering. Estimated short-term construction noise exposure associated with the proposed Project would not be expected to exceed any of the City's noise standard. Therefore, the closest existing noise-sensitive uses to the Project area would not be significantly impacted by the proposed Project construction-related noise.

Onsite construction activities would only occur during the daytime hours when the existing noise sources (e.g., traffic, HVAC units) are at their highest. Project-related construction noise would likely be perceptible from the existing ambient rural or urban noise environment of the nearest sensitive receptors located over a quarter of a mile from the Project site. Therefore, the proposed Project would not result in a substantial temporary or periodic increase in ambient noise levels in the Project vicinity above levels existing without the Project. The impact would be less than significant.

b) **Less than Significant Impact.** The use of a vibratory hammer would generate the highest vibration during Project construction. Vibratory hammers can generate a vibration level of 0.170 PPV from a distance of 25 feet.[93] Assuming a vibratory hammer would be used to drive sheet piles at the Project site, the nearest residences located 1,600 feet from the Project site would be exposed to a vibration level of 0.0003 PPV, well below the City's 0.20 in/sec PPV vibration impact standard. Therefore, this impact is considered less than significant.

c) **No Impact.** New operations associated with the proposed Project would be limited to vehicle use by staff for visual inspections approximately once per month. Therefore, the Project would not result in a substantial temporary or periodic increase in ambient noise levels in the Project vicinity above levels existing without the Project. Thus, no impact would occur.

e) **Less than Significant Impact.** The Project would not be significantly impacted by aircraft operations from nearby Norman Y. Mineta San José International Airport of Moffett Field. Norman Y. Mineta San José International Airport and Moffett Field are located approximately 4.5 miles south and 5 miles southwest of the Project area, respectively. Since the Project site is more than 2 miles from a public use airport and proposes no uses that would be affected by local aircraft operations, the proposed Project would not be significantly impacted by aircraft noise. The impact would be less than significant.

f) **No Impact.** There are no known private airstrips in the Project vicinity. Since the Project site is not in the vicinity of a private airstrip and proposes no uses that would be substantially affected by local aircraft operations, the proposed Project would not be affected by aircraft noise. There would be no impact.

---

93 Federal Transit Administration, 2006. *Transit Noise and Vibration Impact Assessment*, May 2006.

2.2.14 Population and Housing

Issues (and Supporting Information Sources):	*Potentially Significant Impact*	*Less Than Significant with Mitigation Incorporated*	*Less Than Significant Impact*	*No Impact*
13. POPULATION AND HOUSING — Would the project:				
a) Induce substantial population growth in an area, either directly (for example, by proposing new homes and businesses) or indirectly (for example, through extension of roads or other infrastructure)?	☐	☐	☐	☒
b) Displace substantial numbers of existing housing, necessitating the construction of replacement housing elsewhere?	☐	☐	☐	☒
c) Displace substantial numbers of people, necessitating the construction of replacement housing elsewhere?	☐	☐	☐	☒

Setting

The Project would be located in lands managed by the RWF as part of its operations. There are no residences or public roads there. The proposed Project would provide a levee repair to prevent a loss of services already provided by the RWF and would not add capacity.

Discussion

a) **No Impact.** The proposed Project would not involve or result in major new housing, business, or industrial developments that could drive population growth. The proposed Project would involve repairing and reinforcing an existing levee to safeguard against the loss of public services provided by Pond A18's water and to avoid a potential flooding problem if the levee were to fail. As noted in Chapter 1, Project Description, the proposed Project would not contribute to or support the construction of new facilities. Therefore, the proposed Project would not lift an existing indirect impediment to growth, such as by increasing available capacity at a wastewater treatment plant. Therefore, no impact would occur.

b) **No Impact.** The proposed Project would involve construction activities of an existing levee. It would not result in the demolition of existing housing, or otherwise cause a reduction in housing units on site or elsewhere. Therefore, no impact would occur.

c) **No Impact.** The proposed Project would involve construction at an existing levee. There is no existing housing located on site, and no persons would be displaced as a result of Project implementation. Therefore, no impact would occur.

2.2.15 Public Services

Issues (and Supporting Information Sources):	*Potentially Significant Impact*	*Less Than Significant with Mitigation Incorporated*	*Less Than Significant Impact*	*No Impact*
14. PUBLIC SERVICES — Would the project:				
a) Result in substantial adverse physical impacts associated with the provision of new or physically altered governmental facilities, need for new or physically altered government facilities, the construction of which could cause significant environmental impacts, in order to maintain acceptable service ratios, response times, or other performance objectives for any of the following public services:				
i) Fire protection?	☐	☐	☒	☐
ii) Police protection?	☐	☐	☐	☒
iii) Schools?	☐	☐	☐	☒
iv) Parks?	☐	☐	☐	☒
v) Other public facilities?	☐	☐	☐	☒

Setting

Pond A18 and its levee and South Gate structure are part of the RWF that provides public services in the form of wastewater treatment and water quality management. The proposed Project would avoid the potential for loss or damage to that service by repairing the South Gate levee.

Fire protection services for the City are provided by the San José Fire Department (SJFD). The SJFD currently consists of 33 active stations serving an area of 206 square miles and over one million residents. The SJFD responds to all fires, hazardous materials spills, and medical emergencies (including injury accidents) in the City, including at the RWF site and the Project area. Police services for the City of San José are provided by the San José Police Department (SJPD). The RWF also has a Contingency Plan and an Emergency Response Plan (ERP) as well as staff to coordinate during emergencies. There are no schools or parks in the Project area, and the nearby Don Edwards San Francisco Bay National Wildlife Refuge is not accessible from the Project site or vice-versa.

Discussion

a.i) **Less than Significant Impact.** The proposed Project would involve construction of components relating to the reinforcement of an existing levee. In the unlikely event of a fire within the Project area, including a fuel fire, fire response would be provided by the SJFD. SJFD maintains two hazardous incident teams, a rescue medic, and a foam unit, as well as other standard facilities and equipment. These existing resources are anticipated to be sufficient to manage potential fire incidents on site. The proposed Project would not result in new activities on site that would increase demand for fire protection. Therefore, the proposed Project would not deleteriously affect fire department response times, and

would not require additional facilities or equipment. This impact would be less than significant.

a.ii-v) **No Impact.** The proposed Project would involve construction of components relating to the reinforcement of an existing levee. No operational activities beyond routine maintenance inspections are associated with the proposed Project. The proposed construction components and activities would not require additional police protection or response, need for schools, demand for parks, or need for other public facilities, such that new or physically altered public facilities would be needed. Additionally, the proposed Project would not create demand for police services such that response times would be altered. As noted above, implementing the Project would alleviate a potential for risks associated with loss of RWF-provided services. It would not increase those risks. Therefore, there would be no impact.

2.2.16 Recreation

Issues (and Supporting Information Sources):	Potentially Significant Impact	Less Than Significant with Mitigation Incorporated	Less Than Significant Impact	No Impact
15. RECREATION:				
a) Would the project increase the use of existing neighborhood and regional parks or other recreational facilities such that substantial physical deterioration of the facility would occur or be accelerated?	☐	☐	☐	☒
b) Does the project include recreational facilities or require the construction or expansion of recreational facilities which might have an adverse physical effect on the environment?	☐	☐	☐	☒

Setting

The Don Edwards San Francisco Bay National Wildlife Refuge (Refuge) Environmental Education Center (EEC) is located approximately 700 feet from the Project site. The Mallard Slough Trail, the New Chicago Marsh Trail, and the Marsh View Trail are all located near the EEC. The Mallard Slough Trail[94] runs on the opposite side of the Artesian Slough[95] west of the Project area, approximately 500 feet away at its nearest point. There is no common entry to the Refuge's EEC and the Pond A18 levee, which is limited to use by the RWF staff.

Discussion

a) **No Impact.** The proposed Project would involve temporary construction activities of less than one month. These activities would involve repairing and reinforcing an existing levee. The proposed Project would not permanently affect any existing recreational uses of nearby features and would only briefly and minimally be noticeable by recreational users of the nearby Refuge facilities. The proposed Project would not result in new housing development or other activities that would increase use, alter usage patterns, or increase demand for existing recreational facilities, thereby causing increased physical deterioration of recreation related facilities or demand for new facilities. Therefore, no impact would occur.

b) **No Impact.** The proposed Project does not propose to construct recreational facilities and would not result in the need for new or expanded recreational facilities. Therefore, no impact would occur.

---

94 U.S. Fish & Wildlife Service, 2013. Don Edwards San Francisco Bay National Wildlife Refuge Trail Guide. July 2013.

95 Mallard Slough and Artesian Slough are alternate names for the same body of water. Most current maps and documents use "Artesian Slough", but the Refuge uses the Mallard Slough name for the trail.

2.2.17 Transportation and Traffic

Issues (and Supporting Information Sources):	Potentially Significant Impact	Less Than Significant with Mitigation Incorporated	Less Than Significant Impact	No Impact
16. TRANSPORTATION/TRAFFIC — Would the project:				
a) Conflict with an applicable plan, ordinance or policy establishing measures of effectiveness for the performance of the circulation system, taking into account all modes of transportation including mass transit and non-motorized travel and relevant components of the circulation system, including but not limited to intersections, streets, highways and freeways, pedestrian and bicycle paths, and mass transit?	☐	☐	☐	☒
b) Conflict with an applicable congestion management program, including, but not limited to level of service standards and travel demand measures, or other standards established by the county congestion management agency for designated roads or highways?	☐	☐	☐	☒
c) Result in a change in air traffic patterns, including either an increase in traffic levels or a change in location that results in substantial safety risks?	☐	☐	☐	☒
d) Substantially increase hazards due to a design feature (e.g., sharp curves or dangerous intersections) or incompatible uses (e.g., farm equipment)?	☐	☐	☐	☒
e) Result in inadequate emergency access?	☐	☐	☐	☒
f) Conflict with adopted policies, plans, or programs regarding public transit, bicycle, or pedestrian facilities, or otherwise decrease the performance or safety of such facilities?	☐	☐	☐	☒

Setting

The Project site is located on a levee road that is only accessible to the staff of the RWF and its contractors. The access to the site itself is through locked gates controlled by the RWF. The public roads around the RWF receive relatively little traffic that is not associated with the RWF operations itself or those of other nearby industrial or public service-related facilities.

Discussion

a) **No Impact.** The proposed Project would repair a section of failing levee that is part of the RWF. The RWF's plans for managing its facilities provide for such occasional repairs as necessary to maintain its infrastructure. The proposed Project would not change the existing or future roadways or other circulation system in any way. There would be a limited amount of construction equipment associated with Project implementation (an excavator, a pile driver, a crane, etc.), but these would only go in and out once. There would be several haul trucks to bring materials (sheet piles, backfill). Crew vehicles would be limited because typical crew sizes would be less than 20 people.

Construction equipment and workers would access the site from Los Esteros Road and Zanker Road, generally exiting from State Route (SR) 237 from the Zanker Road off-ramp. Site access would be only to and from the South Gate Structure and not into the

main portions Facility itself. The proposed Project would not require any road closures or lane closures, and would proceed during a 30-day construction schedule. Anticipated construction related trips would thus be dispersed in time across the construction period. The most likely intersections that could be affected by an increase in construction traffic trips would be the Zanker Road / SR 237 Westbound Ramps and Zanker Road / SR 237 Eastbound Ramps intersections. Both of these intersections are part of the Santa Clara Valley Transportation Authority (VTA) Congestion Management Program (CMP). According to the VTA's 2012 Annual Monitoring and Conformance Report, these two intersections operate at level of service (LOS) B during the peak hours.[96] The addition of construction trips associated with of a crew less than 20 people per day over the construction period would result in minor to negligible changes to existing traffic patterns along Project area access roads. These additional trips are not anticipated to reduce level of service noticeably, and the intersections would continue to operate at acceptable service levels (LOS B). Thus, there would be no potential to conflict with a circulation plan or policy and thus no impact.

b) **No Impact.** As discussed above, there would be no potential for conflicts with congestion management programs, including those associated with changes in level of service standards, travel demand measures, or other standards. There would be no impact.

c) **No Impact.** The proposed Project is not located in close proximity to an existing airport and nothing in the proposed Project would affect or be affected by air traffic or associated with changes in its safety. There would be no impact.

d) **No Impact.** The proposed Project's designs would not change existing roadways or its intended uses. There would be no impact.

e) **No Impact.** As discussed in Section 2.2.9 Hazards and Hazardous Materials above, the levee is not a road and would not be used for emergency response or as an evacuation route. The levee repair associated with the proposed Project would bring no changes to existing emergency access or impede future emergency access. On the contrary, the repair would allow continued emergency access to the rest of the Pond A18 levee, which would be lost if the levee failed. There would be no impact.

f) **No Impact.** The Pond A18 levee is not part of any adopted policies, plans, or programs regarding public transit, bicycle, or pedestrian facilities. Therefore, the proposed Project has not potential to decrease the performance or safety of such facilities. There would be no impact.

---

[96] The operation of a local roadway network is commonly measured and described using a grading system called Level of Service (LOS). The LOS grading system qualitatively characterizes traffic conditions associated with varying levels of vehicle traffic, ranging from LOS A (indicating free-flow traffic conditions with little or no delay experienced by motorists) to LOS F (indicating congested conditions where traffic flows exceed design capacity and result in long delays). This LOS grading system applies to both roadway segments and intersections.

2.2.18 Utilities and Service Systems

Issues (and Supporting Information Sources):	Potentially Significant Impact	Less Than Significant with Mitigation Incorporated	Less Than Significant Impact	No Impact
18. UTILITIES AND SERVICE SYSTEMS — Would the project:				
a) Exceed wastewater treatment requirements of the applicable Regional Water Quality Control Board?	☐	☐	☐	☒
b) Require or result in the construction of new water or wastewater treatment facilities or expansion of existing facilities, the construction of which could cause significant environmental effects?	☐	☐	☐	☒
c) Require or result in the construction of new storm water drainage facilities or expansion of existing facilities, the construction of which could cause significant environmental effects?	☐	☐	☐	☒
d) Have sufficient water supplies available to serve the project from existing entitlements and resources, or are new or expanded entitlements needed?	☐	☐	☒	☐
e) Result in a determination by the wastewater treatment provider which serves or may serve the project that it has adequate capacity to serve the project's projected demand in addition to the provider's existing commitments?	☐	☐	☐	☒
f) Be served by a landfill with sufficient permitted capacity to accommodate the project's solid waste disposal needs?	☐	☐	☒	☐
g) Comply with federal, state, and local statutes and regulations related to solid waste?	☐	☐	☒	☐

Setting

The City's sanitary sewer system includes approximately 2,200 miles of sewer pipelines ranging from six to 90 inches in diameter. Sewer systems from San José and Santa Clara route to the RWF, of which Pond A18, its levees, and the South Gate structure are components. The RWF is a public service system that provides primary, secondary, and tertiary treatment of wastewater and has the capacity to treat 167 million gallons per day (mgd) average dry weather influent flow.

The RWF has a number of existing permits and regulatory agreements with which it must comply. One of these is a Waste Discharge Requirement (WDR) permit from the San Francisco RWQCB. The proposed Project would repair a failing levee at Pond A18's South Gate, which would allow the RWF to continue to comply with the WDR conditions. A levee failure would prevent the RWF from managing water quality in Artesian Slough and other aspects of the WDR.

Solid waste and recycling collection services for businesses are provided by various contracted and franchised waste and recycling haulers. Non-residential waste may be disposed at any of four privately owned landfills in San José (including Newby Island Sanitary Landfill, Zanker Road Landfill, Zanker Materials Processing Facility, and Guadalupe Landfill) or at other landfills outside the county. According to CalRecycle and Santa Clara County's 2012 five-year

countywide integrated waste management plan review report, the county has adequate disposal capacity (i.e., greater than 15 years).[97,98]

The RWF currently receives electrical power from the grid via PG&E as the main source of power supply. However, the Project area is outside of the main RWF property, and the operation of the South Gate does not rely on electrical power. There are PG&E towers and power lines that run through the central and eastern portion of Pond A18 itself, but the proposed Project would not affect those lines or PG&E's ability to access them.

Discussion

a) **No Impact.** The proposed Project would not generate any wastewater during construction, and therefore would not interfere with or conflict with any applicable RWQCB requirements for wastewater treatment. For a discussion of stormwater and stormwater quality associated with Project construction, please refer to Section 2.2.10., Hydrology and Water Quality.

b) **No Impact.** The proposed Project would involve construction activities relating to the repair and reinforcement of an existing levee that would maintain the existing wastewater treatment facility. The proposed Project would not require or result in the construction of new water or wastewater treatment facilities, because the Project would not require additional water supplies, would not generate wastewater, and would not result in the construction of a major housing development or other action that could drive increases in demand for water or wastewater treatment facilities. Thus, no impact is expected to occur.

c) **No Impact.** The proposed Project would not involve the installation of new impervious surfaces. Under existing conditions, stormwater/drainage from the Project area is not collected. Under the proposed Project, stormwater would continue to drain in the same way. Thus, no impact is expected to occur.

d) **Less than Significant Impact.** The proposed Project may require limited water during construction in support of dust suppression. Otherwise, because no ongoing operations, except routine maintenance, would be associated with the Project, no water use would be required. Therefore, existing water supplies at the RWF would be sufficient to enable construction of the proposed Project without requiring any new or expanded entitlements, or other new sources of water supply. This impact is considered less than significant. Additionally, the limited water demand of the proposed Project during construction would not trigger the need to complete a Water Supply Assessment.

97 California Department of Resources Recycling and Recovery, Facility Information Toolbox: Identify Disposal Facility Capacity Shortfalls-Santa Clara County. Available online at Accessed April 7, 2017. http://www.calrecycle.ca.gov/FacIT/Facility/DisposalGap.aspx.

98 Santa Clara County, 3rd Five-Year CIWMP/RAIWMP Review Report, April 25, 2011. Accessed April 7, 2017. https://www.sccgov.org/sites/rwr/Pages/CoIWMP.aspx.

e) **No Impact.** The proposed Project would not generate wastewater. Therefore, the Project would not require additional wastewater treatment capacity in order to serve the Project. No impact would occur.

f) **Less than Significant Impact.** During construction, the proposed Project would generate minimal construction-related waste and debris. During the construction process, solid wastes may include construction-related wastes such as metals, rock, dirt, and other common materials. Because no operations beyond routine inspection of the proposed Project is anticipated, no operational waste is expected.

To the extent feasible, recyclable construction materials would be recycled. Non-recyclable materials would be landfilled or otherwise disposed of in accordance with applicable regulatory requirements. As noted above, the proposed Project may utilize one or more of the four landfills identified above to dispose of any remaining or unused construction-related solid wastes. Given that Santa Clara County has at least 15 years of available landfill capacity, the proposed Project would generate a relatively limited volume of solid waste, and no operations are associated with the proposed Project, available landfill capacity would not be noticeably affected by the proposed Project. This impact is considered less than significant.

g) **Less than Significant Impact.** The proposed Project construction would comply with all applicable regulatory requirements related to solid waste. Specifications for Project construction would contain requirements for the handling, storage, cleanup, and disposal of any hazardous materials, or other construction pollutants. For additional discussion of hazardous materials and potential hazardous materials handling and impacts, please refer to Section 2.2.9, Hazards and Hazardous Materials. This impact is considered less than significant.

2.2.19 Mandatory Findings of Significance

Issues (and Supporting Information Sources):	*Potentially Significant Impact*	*Less Than Significant with Mitigation Incorporated*	*Less Than Significant Impact*	*No Impact*
19. MANDATORY FINDINGS OF SIGNIFICANCE —				
a) Does the project have the potential to degrade the quality of the environment, substantially reduce the habitat of a fish or wildlife species, cause a fish or wildlife population to drop below self-sustaining levels, threaten to eliminate a plant or animal community, reduce the number or restrict the range of a rare or endangered plant or animal or eliminate important examples of the major periods of California history or prehistory?	☐	☒	☐	☐
b) Does the project have impacts that are individually limited but cumulatively considerable? ("Cumulatively considerable" means that the incremental effects of a project are considerable when viewed in connection with the effects of past projects, the effects of other current projects, and the effects of probable future projects)?	☐	☐	☒	☐
c) Does the project have environmental effects which will cause substantial adverse effects on human beings, either directly or indirectly?	☐	☐	☒	☐

Discussion

a) **Less than Significant Impact with Mitigation.** The proposed Project would involve small amounts of fill – in the form of sheet piles and rock backfill material – to be placed in the upper- and mid- intertidal zone on each side of the Pond A18 levee near the South Gate structure. Those areas are waters of the United States and of the State of California, as well as being potential habitat for several special-status species of fish and wildlife. As Section 2.2.4, Biological Resources explains, however, there would be a number of mitigation measures implemented to reduce the potential for direct and indirect effects to individuals of these species to a level that is less than significant. Further, the total area of habitat loss is less than one acre, which is below that which would substantially reduce the habitat for a species or affect population dynamics or migration. This assertion would be substantiated by the issuance of several permits and other regulatory authorizations from the agencies responsible for protecting those resources from unacceptable impacts. The levee and the South Gate structure are recent structures; the gate is 13 years old and would not be affected, and the levee repair itself is similar to other instances of ongoing levee maintenance and repairs that take place on similar levees in southern San Francisco Bay. As discussed for potential impacts to cultural resources, there are no historical resources or archaeological resources in the Project area. Potential impacts to inadvertently discovered archaeological resources, tribal cultural resources or human remains would be mitigated to a less-than-significant level with implementation of **Mitigation Measures CUL-1.1**, **CUL 1.2**, and **CUL-2**. No other cultural resources would be affected and the proposed Project would not eliminate important examples of the major periods of California history or prehistory.

b) **Less than Significant Impact.** Cumulative environmental effects are multiple individual effects that, when considered together, are considerable or may compound or increase other environmental impacts. The proposed Project is a minor repair to a levee in order to return it to its previous size, shape, and degree of functionality. Its own environmental impacts are very small, and its location adjacent to a National Wildlife Refuge and a pond operated by the RWF mean that there is little potential for current or foreseeable future projects to adversely affect the local environment. On the contrary, the current plans for the surroundings are for habitat restoration and enhancements that would offset even the small amounts of fill necessary to repair this levee. The Project's air quality impacts would be limited to the construction period. Temporary construction-related air quality and GHG emissions would be minimized through the adherence to BAAQMD standards and requirements, and BAAQMD Basic Construction Measures. As described in Section 2.2.3, Air Quality, the proposed Project would not result in a cumulatively considerable net increase in criteria air pollutants. The analysis of greenhouse gas emissions is inherently a cumulative analysis (with the geographic scope of the impact being the global climate). As described in Section 2.2.8, the proposed Project would not result in significant impacts related to greenhouse gas emissions. The proposed Project would implement the identified mitigation measures in Section 2.2.4 and would have either no impacts or less-than-significant impacts on riparian habitat or other sensitive natural communities, migration of species, or applicable biological resources protection ordinances. Therefore, the proposed Project would not contribute to any cumulative impact for these resources. The cumulative impacts would be less than significant.

c) **Less than Significant Impact.** The proposed Project involves minor repairs to an existing levee to avoid loss of a public service. It would take place in an area that is not accessible to the general public and that involves no changes in the landscape, land uses, services, or other aspects of human activities. It will have no measurable increase in ongoing operational or management relative to the pre-Project conditions. All potential environmental impacts identified in support of the proposed Project would be minimal/less than significant without mitigation, or would be minimized via implementation of applicable mitigation measures. All potential hazards and hazardous materials impacts would be minimized. It would not cause changes in the environment that have any potential to cause substantial adverse direct or indirect effects on human beings.

This page intentionally left blank

CHAPTER 3
Report Preparation

3.1 Lead Agency

City of San José
Department of Planning, Building and Code Enforcement (PBCE)
Kieulan Pham, Planner
200 East Santa Clara Street, 3rd Floor Tower
San José CA 95113-1905
(408) 535-3844; kieulan.pham@sanjoseca.gov

City of San José
Department of Environmental Services
Cathy Correia, Supervising Environmental Services Specialist
200 East Santa Clara Street, 10th Floor
San José CA 95113-1905
(408) 975-2508; cathy.correia@sanjoseca.gov

3.2 Environmental Consultants

The City of San José retained Environmental Science Associates to prepare this Initial Study/Mitigated Negative Declaration.

Staff Member	Role
Meryka Dirks	Project Director
David Halsing	Project Manager
Alena Maudru	Deputy Project Manager/Project Associate
Tessa Verhoef	Project Associate
Brian Schuster	Technical Analyst – Air Quality and GHG
Heidi Koenig	Technical Analyst – Cultural and Tribal Resources
Elizabeth Hill	Technical Analyst – Biological Resources

This page intentionally left blank

APPENDIX A

Air Quality and Greenhouse Gas Calculations

A-1 Project Construction Emissions Worksheets

A-1.1 CalEEMod Annual Output

Pond A18

Santa Clara County, Annual

1.0 Project Characteristics

1.1 Land Usage

Land Uses	Size	Metric	Lot Acreage	Floor Surface Area	Population
User Defined Industrial	1.00	User Defined Unit	0.00	0.00	0

1.2 Other Project Characteristics

Urbanization	Urban	**Wind Speed (m/s)**	2.2	**Precipitation Freq (Days)**	58
Climate Zone	4			**Operational Year**	2019
Utility Company	Pacific Gas & Electric Company				
CO2 Intensity (lb/MWhr)	641.35	**CH4 Intensity (lb/MWhr)**	0.029	**N2O Intensity (lb/MWhr)**	0.006

1.3 User Entered Comments & Non-Default Data

Project Characteristics -

Land Use -

Construction Phase - From Equipment for Construction and Emissions.xlsx

Off-road Equipment -

Off-road Equipment - From Equipment for Construction and Emissions.xlsx

Off-road Equipment - From Equipment for Construction and Emissions.xlsx

Off-road Equipment - From Equipment for Construction and Emissions.xlsx

Off-road Equipment - From Equipment for Construction and Emissions.xlsx

Off-road Equipment - From Equipment for Construction and Emissions.xlsx

Off-road Equipment - From Equipment for Construction and Emissions.xlsx

Off-road Equipment - From Equipment for Construction and Emissions.xlsx. Assume "backfill" is an excavator

Trips and VMT - From Equipment for Construction and Emissions.xlsx - doubled number of workers AND haul trips to get total one-way trips per phase.

On-road Fugitive Dust - Source: ARB 2014: Miscellaneous Process Methodology 7.9 — Entrained Road Travel, Paved Road Dust.
https://www.arb.ca.gov/ei/areasrc/fullpdf/fullz7-9_2016.pdf

Demolition - NEED DEMO?

Grading - No grading

Table Name	Column Name	Default Value	New Value
tblConstructionPhase	NumDays	0.00	16.00
tblConstructionPhase	NumDays	0.00	5.00
tblConstructionPhase	NumDays	0.00	3.00
tblConstructionPhase	NumDays	0.00	3.00
tblConstructionPhase	NumDays	0.00	3.00
tblConstructionPhase	NumDays	0.00	1.00
tblConstructionPhase	NumDays	0.00	1.00
tblOffRoadEquipment	OffRoadEquipmentUnitAmount	1.00	2.00
tblOffRoadEquipment	OffRoadEquipmentUnitAmount	2.00	1.00
tblOffRoadEquipment	OffRoadEquipmentUnitAmount	2.00	1.00
tblOffRoadEquipment	OffRoadEquipmentUnitAmount	2.00	1.00
tblOffRoadEquipment	UsageHours	4.00	6.00
tblOffRoadEquipment	UsageHours	8.00	7.00
tblOffRoadEquipment	UsageHours	6.00	8.00
tblOnRoadDust	RoadSiltLoading	0.10	0.04
tblOnRoadDust	RoadSiltLoading	0.10	0.04
tblOnRoadDust	RoadSiltLoading	0.10	0.04
tblOnRoadDust	RoadSiltLoading	0.10	0.04
tblOnRoadDust	RoadSiltLoading	0.10	0.04
tblOnRoadDust	RoadSiltLoading	0.10	0.04
tblOnRoadDust	RoadSiltLoading	0.10	0.04
tblProjectCharacteristics	OperationalYear	2018	2019
tblTripsAndVMT	HaulingTripNumber	0.00	20.00
tblTripsAndVMT	HaulingTripNumber	0.00	20.00
tblTripsAndVMT	WorkerTripNumber	3.00	10.00

tblTripsAndVMT	WorkerTripNumber	3.00	8.00
tblTripsAndVMT	WorkerTripNumber	0.00	16.00
tblTripsAndVMT	WorkerTripNumber	0.00	8.00
tblTripsAndVMT	WorkerTripNumber	0.00	12.00
tblTripsAndVMT	WorkerTripNumber	0.00	10.00

2.0 Emissions Summary

2.1 Overall Construction

Unmitigated Construction

	ROG	NOx	CO	SO2	Fugitive PM10	Exhaust PM10	PM10 Total	Fugitive PM2.5	Exhaust PM2.5	PM2.5 Total	Bio- CO2	NBio- CO2	Total CO2	CH4	N2O	CO2e
Year	tons/yr										MT/yr					
2017	0.0238	0.1872	0.1390	2.6000e-004	1.9000e-004	0.0115	0.0117	1.7000e-004	0.0112	0.0114	0.0000	22.7001	22.7001	3.4500e-003	0.0000	22.7863
Maximum	**0.0238**	**0.1872**	**0.1390**	**2.6000e-004**	**1.9000e-004**	**0.0115**	**0.0117**	**1.7000e-004**	**0.0112**	**0.0114**	**0.0000**	**22.7001**	**22.7001**	**3.4500e-003**	**0.0000**	**22.7863**

Mitigated Construction

	ROG	NOx	CO	SO2	Fugitive PM10	Exhaust PM10	PM10 Total	Fugitive PM2.5	Exhaust PM2.5	PM2.5 Total	Bio- CO2	NBio- CO2	Total CO2	CH4	N2O	CO2e
Year	tons/yr										MT/yr					
2017	0.0238	0.1872	0.1390	2.6000e-004	5.8000e-004	0.0115	0.0121	1.7000e-004	0.0112	0.0114	0.0000	22.7001	22.7001	3.4500e-003	0.0000	22.7863
Maximum	**0.0238**	**0.1872**	**0.1390**	**2.6000e-004**	**5.8000e-004**	**0.0115**	**0.0121**	**1.7000e-004**	**0.0112**	**0.0114**	**0.0000**	**22.7001**	**22.7001**	**3.4500e-003**	**0.0000**	**22.7863**

	ROG	NOx	CO	SO2	Fugitive PM10	Exhaust PM10	PM10 Total	Fugitive PM2.5	Exhaust PM2.5	PM2.5 Total	Bio- CO2	NBio-CO2	Total CO2	CH4	N20	CO2e
Percent Reduction	**0.00**	**0.00**	**0.00**	**0.00**	**-205.26**	**0.00**	**-3.34**	**0.00**	**0.00**	**0.00**	**0.00**	**0.00**	**0.00**	**0.00**	**0.00**	**0.00**

Quarter	Start Date	End Date	Maximum Unmitigated ROG + NOX (tons/quarter)	Maximum Mitigated ROG + NOX (tons/quarter)
		Highest		

2.2 Overall Operational

Unmitigated Operational

	ROG	NOx	CO	SO2	Fugitive PM10	Exhaust PM10	PM10 Total	Fugitive PM2.5	Exhaust PM2.5	PM2.5 Total	Bio- CO2	NBio- CO2	Total CO2	CH4	N2O	CO2e
Category	tons/yr										MT/yr					
Area	0.0000	0.0000	1.0000e-005	0.0000		0.0000	0.0000		0.0000	0.0000	0.0000	2.0000e-005	2.0000e-005	0.0000	0.0000	2.0000e-005
Energy	0.0000	0.0000	0.0000	0.0000		0.0000	0.0000		0.0000	0.0000	0.0000	0.0000	0.0000	0.0000	0.0000	0.0000
Mobile	0.0000	0.0000	0.0000	0.0000	0.0000	0.0000	0.0000	0.0000	0.0000	0.0000	0.0000	0.0000	0.0000	0.0000	0.0000	0.0000
Waste						0.0000	0.0000		0.0000	0.0000	0.0000	0.0000	0.0000	0.0000	0.0000	0.0000
Water						0.0000	0.0000		0.0000	0.0000	0.0000	0.0000	0.0000	0.0000	0.0000	0.0000
Total	**0.0000**	**0.0000**	**1.0000e-005**	**0.0000**	**0.0000**	**0.0000**	**0.0000**	**0.0000**	**0.0000**	**0.0000**	**0.0000**	**2.0000e-005**	**2.0000e-005**	**0.0000**	**0.0000**	**2.0000e-005**

Mitigated Operational

	ROG	NOx	CO	SO2	Fugitive PM10	Exhaust PM10	PM10 Total	Fugitive PM2.5	Exhaust PM2.5	PM2.5 Total	Bio- CO2	NBio- CO2	Total CO2	CH4	N2O	CO2e
Category	tons/yr										MT/yr					

Area	0.0000	0.0000	1.0000e-005	0.0000		0.0000	0.0000		0.0000	0.0000	0.0000	2.0000e-005	2.0000e-005	0.0000	0.0000	2.0000e-005
Energy	0.0000	0.0000	0.0000	0.0000		0.0000	0.0000		0.0000	0.0000	0.0000	0.0000	0.0000	0.0000	0.0000	0.0000
Mobile	0.0000	0.0000	0.0000	0.0000	0.0000	0.0000	0.0000	0.0000	0.0000	0.0000	0.0000	0.0000	0.0000	0.0000	0.0000	0.0000
Waste						0.0000	0.0000		0.0000	0.0000	0.0000	0.0000	0.0000	0.0000	0.0000	0.0000
Water						0.0000	0.0000		0.0000	0.0000	0.0000	0.0000	0.0000	0.0000	0.0000	0.0000
Total	**0.0000**	**0.0000**	**1.0000e-005**	**0.0000**	**0.0000**	**0.0000**	**0.0000**	**0.0000**	**0.0000**	**0.0000**	**0.0000**	**2.0000e-005**	**2.0000e-005**	**0.0000**	**0.0000**	**2.0000e-005**

	ROG	NOx	CO	SO2	Fugitive PM10	Exhaust PM10	PM10 Total	Fugitive PM2.5	Exhaust PM2.5	PM2.5 Total	Bio- CO2	NBio-CO2	Total CO2	CH4	N20	CO2e
Percent Reduction	**0.00**	**0.00**	**0.00**	**0.00**	**0.00**	**0.00**	**0.00**	**0.00**	**0.00**	**0.00**	**0.00**	**0.00**	**0.00**	**0.00**	**0.00**	**0.00**

3.0 Construction Detail

Construction Phase

Phase Number	Phase Name	Phase Type	Start Date	End Date	Num Days Week	Num Days	Phase Description
1	Demolition, Clear and Grub	Demolition	10/1/2017	10/2/2017	5	1	
2	Miscellaneous	Building Construction	10/1/2017	10/23/2017	5	16	
3	Site Preparation Equipment Mob Placement Rock Area	Site Preparation	10/3/2017	10/3/2017	5	1	
4	Drive Sheets Piles	Building Construction	10/4/2017	10/10/2017	5	5	
5	Tie Rods	Building Construction	10/11/2017	10/14/2017	5	3	
6	Structural Backfill	Building Construction	10/15/2017	10/18/2017	5	3	
7	Clean up Demobilization	Building Construction	10/19/2017	10/23/2017	5	3	

Acres of Grading (Site Preparation Phase): 0

Acres of Grading (Grading Phase): 0

Acres of Paving: 0

Residential Indoor: 0; Residential Outdoor: 0; Non-Residential Indoor: 0; Non-Residential Outdoor: 0; Striped Parking Area: 0

OffRoad Equipment

Phase Name	Offroad Equipment Type	Amount	Usage Hours	Horse Power	Load Factor
Demolition, Clear and Grub	Tractors/Loaders/Backhoes	1	8.00	97	0.37
Miscellaneous	Air Compressors	1	7.00	78	0.48
Miscellaneous	Generator Sets	2	8.00	84	0.74
Miscellaneous	Welders	1	7.00	46	0.45
Site Preparation Equipment Mob Placement Rock Area	Tractors/Loaders/Backhoes	1	8.00	97	0.37
Drive Sheets Piles	Bore/Drill Rigs	1	8.00	221	0.50
Drive Sheets Piles	Cranes	2	6.00	231	0.29
Tie Rods	Excavators	1	7.00	158	0.38
Tie Rods	Trenchers	1	7.00	78	0.50
Structural Backfill	Crushing/Proc. Equipment	2	6.00	85	0.78
Structural Backfill	Tractors/Loaders/Backhoes	1	7.00	97	0.37
Clean up Demobilization	Tractors/Loaders/Backhoes	1	8.00	97	0.37

Trips and VMT

Phase Name	Offroad Equipment Count	Worker Trip Number	Vendor Trip Number	Hauling Trip Number	Worker Trip Length	Vendor Trip Length	Hauling Trip Length	Worker Vehicle Class	Vendor Vehicle Class	Hauling Vehicle Class
Demolition, Clear and Grub	1	10.00	0.00	0.00	10.80	7.30	20.00	LD_Mix	HDT_Mix	HHDT
Miscellaneous	4	0.00	0.00	0.00	10.80	7.30	20.00	LD_Mix	HDT_Mix	HHDT
Site Preparation Equipment Mob	1	8.00	0.00	0.00	10.80	7.30	20.00	LD_Mix	HDT_Mix	HHDT
Drive Sheets Piles	3	16.00	0.00	20.00	10.80	7.30	20.00	LD_Mix	HDT_Mix	HHDT
Tie Rods	2	8.00	0.00	0.00	10.80	7.30	20.00	LD_Mix	HDT_Mix	HHDT
Structural Backfill	3	12.00	0.00	20.00	10.80	7.30	20.00	LD_Mix	HDT_Mix	HHDT
Clean up Demobilization	1	10.00	0.00	0.00	10.80	7.30	20.00	LD_Mix	HDT_Mix	HHDT

3.1 Mitigation Measures Construction

3.2 Demolition, Clear and Grub - 2017

Unmitigated Construction On-Site

	ROG	NOx	CO	SO2	Fugitive PM10	Exhaust PM10	PM10 Total	Fugitive PM2.5	Exhaust PM2.5	PM2.5 Total	Bio- CO2	NBio- CO2	Total CO2	CH4	N2O	CO2e
Category	tons/yr										MT/yr					
Off-Road	1.6000e-004	1.5200e-003	1.2000e-003	0.0000		1.1000e-004	1.1000e-004		1.1000e-004	1.1000e-004	0.0000	0.1444	0.1444	4.0000e-005	0.0000	0.1455
Total	**1.6000e-004**	**1.5200e-003**	**1.2000e-003**	**0.0000**		**1.1000e-004**	**1.1000e-004**		**1.1000e-004**	**1.1000e-004**	**0.0000**	**0.1444**	**0.1444**	**4.0000e-005**	**0.0000**	**0.1455**

Unmitigated Construction Off-Site

	ROG	NOx	CO	SO2	Fugitive PM10	Exhaust PM10	PM10 Total	Fugitive PM2.5	Exhaust PM2.5	PM2.5 Total	Bio- CO2	NBio- CO2	Total CO2	CH4	N2O	CO2e
Category	tons/yr										MT/yr					
Hauling	0.0000	0.0000	0.0000	0.0000	0.0000	0.0000	0.0000	0.0000	0.0000	0.0000	0.0000	0.0000	0.0000	0.0000	0.0000	0.0000
Vendor	0.0000	0.0000	0.0000	0.0000	0.0000	0.0000	0.0000	0.0000	0.0000	0.0000	0.0000	0.0000	0.0000	0.0000	0.0000	0.0000
Worker	2.0000e-005	2.0000e-005	1.8000e-004	0.0000	1.0000e-005	0.0000	1.0000e-005	1.0000e-005	0.0000	1.0000e-005	0.0000	0.0372	0.0372	0.0000	0.0000	0.0372
Total	**2.0000e-005**	**2.0000e-005**	**1.8000e-004**	**0.0000**	**1.0000e-005**	**0.0000**	**1.0000e-005**	**1.0000e-005**	**0.0000**	**1.0000e-005**	**0.0000**	**0.0372**	**0.0372**	**0.0000**	**0.0000**	**0.0372**

Mitigated Construction On-Site

	ROG	NOx	CO	SO2	Fugitive PM10	Exhaust PM10	PM10 Total	Fugitive PM2.5	Exhaust PM2.5	PM2.5 Total	Bio- CO2	NBio- CO2	Total CO2	CH4	N2O	CO2e
Category	tons/yr										MT/yr					

Off-Road	1.6000e-004	1.5200e-003	1.2000e-003	0.0000		1.1000e-004	1.1000e-004		1.1000e-004	1.1000e-004	0.0000	0.1444	0.1444	4.0000e-005	0.0000	0.1455
Total	**1.6000e-004**	**1.5200e-003**	**1.2000e-003**	**0.0000**		**1.1000e-004**	**1.1000e-004**		**1.1000e-004**	**1.1000e-004**	**0.0000**	**0.1444**	**0.1444**	**4.0000e-005**	**0.0000**	**0.1455**

Mitigated Construction Off-Site

	ROG	NOx	CO	SO2	Fugitive PM10	Exhaust PM10	PM10 Total	Fugitive PM2.5	Exhaust PM2.5	PM2.5 Total	Bio- CO2	NBio- CO2	Total CO2	CH4	N2O	CO2e
Category	tons/yr										MT/yr					
Hauling	0.0000	0.0000	0.0000	0.0000	0.0000	0.0000	0.0000	0.0000	0.0000	0.0000	0.0000	0.0000	0.0000	0.0000	0.0000	0.0000
Vendor	0.0000	0.0000	0.0000	0.0000	0.0000	0.0000	0.0000	0.0000	0.0000	0.0000	0.0000	0.0000	0.0000	0.0000	0.0000	0.0000
Worker	2.0000e-005	2.0000e-005	1.8000e-004	0.0000	2.0000e-005	0.0000	2.0000e-005	1.0000e-005	0.0000	1.0000e-005	0.0000	0.0372	0.0372	0.0000	0.0000	0.0372
Total	**2.0000e-005**	**2.0000e-005**	**1.8000e-004**	**0.0000**	**2.0000e-005**	**0.0000**	**2.0000e-005**	**1.0000e-005**	**0.0000**	**1.0000e-005**	**0.0000**	**0.0372**	**0.0372**	**0.0000**	**0.0000**	**0.0372**

3.3 Miscellaneous - 2017

Unmitigated Construction On-Site

	ROG	NOx	CO	SO2	Fugitive PM10	Exhaust PM10	PM10 Total	Fugitive PM2.5	Exhaust PM2.5	PM2.5 Total	Bio- CO2	NBio- CO2	Total CO2	CH4	N2O	CO2e
Category	tons/yr										MT/yr					
Off-Road	0.0157	0.1040	0.0912	1.5000e-004		7.3200e-003	7.3200e-003		7.3200e-003	7.3200e-003	0.0000	12.7439	12.7439	1.2700e-003	0.0000	12.7756
Total	**0.0157**	**0.1040**	**0.0912**	**1.5000e-004**		**7.3200e-003**	**7.3200e-003**		**7.3200e-003**	**7.3200e-003**	**0.0000**	**12.7439**	**12.7439**	**1.2700e-003**	**0.0000**	**12.7756**

Unmitigated Construction Off-Site

	ROG	NOx	CO	SO2	Fugitive PM10	Exhaust PM10	PM10 Total	Fugitive PM2.5	Exhaust PM2.5	PM2.5 Total	Bio- CO2	NBio- CO2	Total CO2	CH4	N2O	CO2e
Category	tons/yr										MT/yr					
Hauling	0.0000	0.0000	0.0000	0.0000	0.0000	0.0000	0.0000	0.0000	0.0000	0.0000	0.0000	0.0000	0.0000	0.0000	0.0000	0.0000
Vendor	0.0000	0.0000	0.0000	0.0000	0.0000	0.0000	0.0000	0.0000	0.0000	0.0000	0.0000	0.0000	0.0000	0.0000	0.0000	0.0000
Worker	0.0000	0.0000	0.0000	0.0000	0.0000	0.0000	0.0000	0.0000	0.0000	0.0000	0.0000	0.0000	0.0000	0.0000	0.0000	0.0000
Total	**0.0000**	**0.0000**	**0.0000**	**0.0000**	**0.0000**	**0.0000**	**0.0000**	**0.0000**	**0.0000**	**0.0000**	**0.0000**	**0.0000**	**0.0000**	**0.0000**	**0.0000**	**0.0000**

Mitigated Construction On-Site

	ROG	NOx	CO	SO2	Fugitive PM10	Exhaust PM10	PM10 Total	Fugitive PM2.5	Exhaust PM2.5	PM2.5 Total	Bio- CO2	NBio- CO2	Total CO2	CH4	N2O	CO2e
Category	tons/yr										MT/yr					
Off-Road	0.0157	0.1040	0.0912	1.5000e-004		7.3200e-003	7.3200e-003		7.3200e-003	7.3200e-003	0.0000	12.7439	12.7439	1.2700e-003	0.0000	12.7756
Total	**0.0157**	**0.1040**	**0.0912**	**1.5000e-004**		**7.3200e-003**	**7.3200e-003**		**7.3200e-003**	**7.3200e-003**	**0.0000**	**12.7439**	**12.7439**	**1.2700e-003**	**0.0000**	**12.7756**

Mitigated Construction Off-Site

	ROG	NOx	CO	SO2	Fugitive PM10	Exhaust PM10	PM10 Total	Fugitive PM2.5	Exhaust PM2.5	PM2.5 Total	Bio- CO2	NBio- CO2	Total CO2	CH4	N2O	CO2e

Category	tons/yr										MT/yr					
Hauling	0.0000	0.0000	0.0000	0.0000	0.0000	0.0000	0.0000	0.0000	0.0000	0.0000	0.0000	0.0000	0.0000	0.0000	0.0000	0.0000
Vendor	0.0000	0.0000	0.0000	0.0000	0.0000	0.0000	0.0000	0.0000	0.0000	0.0000	0.0000	0.0000	0.0000	0.0000	0.0000	0.0000
Worker	0.0000	0.0000	0.0000	0.0000	0.0000	0.0000	0.0000	0.0000	0.0000	0.0000	0.0000	0.0000	0.0000	0.0000	0.0000	0.0000
Total	**0.0000**	**0.0000**	**0.0000**	**0.0000**	**0.0000**	**0.0000**	**0.0000**	**0.0000**	**0.0000**	**0.0000**	**0.0000**	**0.0000**	**0.0000**	**0.0000**	**0.0000**	**0.0000**

3.4 Site Preparation Equipment Mob Placement Rock Area -

Unmitigated Construction On-Site

	ROG	NOx	CO	SO2	Fugitive PM10	Exhaust PM10	PM10 Total	Fugitive PM2.5	Exhaust PM2.5	PM2.5 Total	Bio- CO2	NBio- CO2	Total CO2	CH4	N2O	CO2e
Category	tons/yr										MT/yr					
Fugitive Dust					0.0000	0.0000	0.0000	0.0000	0.0000	0.0000	0.0000	0.0000	0.0000	0.0000	0.0000	0.0000
Off-Road	1.6000e-004	1.5200e-003	1.2000e-003	0.0000		1.1000e-004	1.1000e-004		1.1000e-004	1.1000e-004	0.0000	0.1444	0.1444	4.0000e-005	0.0000	0.1455
Total	**1.6000e-004**	**1.5200e-003**	**1.2000e-003**	**0.0000**	**0.0000**	**1.1000e-004**	**1.1000e-004**	**0.0000**	**1.1000e-004**	**1.1000e-004**	**0.0000**	**0.1444**	**0.1444**	**4.0000e-005**	**0.0000**	**0.1455**

Unmitigated Construction Off-Site

	ROG	NOx	CO	SO2	Fugitive PM10	Exhaust PM10	PM10 Total	Fugitive PM2.5	Exhaust PM2.5	PM2.5 Total	Bio- CO2	NBio- CO2	Total CO2	CH4	N2O	CO2e
Category	tons/yr										MT/yr					
Hauling	0.0000	0.0000	0.0000	0.0000	0.0000	0.0000	0.0000	0.0000	0.0000	0.0000	0.0000	0.0000	0.0000	0.0000	0.0000	0.0000
Vendor	0.0000	0.0000	0.0000	0.0000	0.0000	0.0000	0.0000	0.0000	0.0000	0.0000	0.0000	0.0000	0.0000	0.0000	0.0000	0.0000
Worker	2.0000e-005	1.0000e-005	1.4000e-004	0.0000	0.0000	0.0000	0.0000	0.0000	0.0000	0.0000	0.0000	0.0298	0.0298	0.0000	0.0000	0.0298

Total	**2.0000e-005**	**1.0000e-005**	**1.4000e-004**	**0.0000**	**0.0000**	**0.0000**	**0.0000**	**0.0000**	**0.0000**	**0.0000**	**0.0000**	**0.0298**	**0.0298**	**0.0000**	**0.0000**	**0.0298**

Mitigated Construction On-Site

	ROG	NOx	CO	SO2	Fugitive PM10	Exhaust PM10	PM10 Total	Fugitive PM2.5	Exhaust PM2.5	PM2.5 Total	Bio- CO2	NBio- CO2	Total CO2	CH4	N2O	CO2e
Category	tons/yr										MT/yr					
Fugitive Dust					0.0000	0.0000	0.0000	0.0000	0.0000	0.0000	0.0000	0.0000	0.0000	0.0000	0.0000	0.0000
Off-Road	1.6000e-004	1.5200e-003	1.2000e-003	0.0000		1.1000e-004	1.1000e-004		1.1000e-004	1.1000e-004	0.0000	0.1444	0.1444	4.0000e-005	0.0000	0.1455
Total	**1.6000e-004**	**1.5200e-003**	**1.2000e-003**	**0.0000**	**0.0000**	**1.1000e-004**	**1.1000e-004**	**0.0000**	**1.1000e-004**	**1.1000e-004**	**0.0000**	**0.1444**	**0.1444**	**4.0000e-005**	**0.0000**	**0.1455**

Mitigated Construction Off-Site

	ROG	NOx	CO	SO2	Fugitive PM10	Exhaust PM10	PM10 Total	Fugitive PM2.5	Exhaust PM2.5	PM2.5 Total	Bio- CO2	NBio- CO2	Total CO2	CH4	N2O	CO2e
Category	tons/yr										MT/yr					
Hauling	0.0000	0.0000	0.0000	0.0000	0.0000	0.0000	0.0000	0.0000	0.0000	0.0000	0.0000	0.0000	0.0000	0.0000	0.0000	0.0000
Vendor	0.0000	0.0000	0.0000	0.0000	0.0000	0.0000	0.0000	0.0000	0.0000	0.0000	0.0000	0.0000	0.0000	0.0000	0.0000	0.0000
Worker	2.0000e-005	1.0000e-005	1.4000e-004	0.0000	2.0000e-005	0.0000	2.0000e-005	0.0000	0.0000	0.0000	0.0000	0.0298	0.0298	0.0000	0.0000	0.0298
Total	**2.0000e-005**	**1.0000e-005**	**1.4000e-004**	**0.0000**	**2.0000e-005**	**0.0000**	**2.0000e-005**	**0.0000**	**0.0000**	**0.0000**	**0.0000**	**0.0298**	**0.0298**	**0.0000**	**0.0000**	**0.0298**

3.5 Drive Sheets Piles - 2017

Unmitigated Construction On-Site

	ROG	NOx	CO	SO2	Fugitive PM10	Exhaust PM10	PM10 Total	Fugitive PM2.5	Exhaust PM2.5	PM2.5 Total	Bio- CO2	NBio- CO2	Total CO2	CH4	N2O	CO2e
Category	tons/yr										MT/yr					
Off-Road	3.3300e-003	0.0418	0.0159	5.0000e-005		1.6700e-003	1.6700e-003		1.5300e-003	1.5300e-003	0.0000	4.1913	4.1913	1.2800e-003	0.0000	4.2234
Total	**3.3300e-003**	**0.0418**	**0.0159**	**5.0000e-005**		**1.6700e-003**	**1.6700e-003**		**1.5300e-003**	**1.5300e-003**	**0.0000**	**4.1913**	**4.1913**	**1.2800e-003**	**0.0000**	**4.2234**

Unmitigated Construction Off-Site

	ROG	NOx	CO	SO2	Fugitive PM10	Exhaust PM10	PM10 Total	Fugitive PM2.5	Exhaust PM2.5	PM2.5 Total	Bio- CO2	NBio- CO2	Total CO2	CH4	N2O	CO2e
Category	tons/yr										MT/yr					
Hauling	1.1000e-004	3.5500e-003	7.0000e-004	1.0000e-005	4.0000e-005	2.0000e-005	6.0000e-005	3.0000e-005	2.0000e-005	5.0000e-005	0.0000	0.7843	0.7843	4.0000e-005	0.0000	0.7852
Vendor	0.0000	0.0000	0.0000	0.0000	0.0000	0.0000	0.0000	0.0000	0.0000	0.0000	0.0000	0.0000	0.0000	0.0000	0.0000	0.0000
Worker	1.8000e-004	1.4000e-004	1.4400e-003	0.0000	4.0000e-005	0.0000	5.0000e-005	5.0000e-005	0.0000	5.0000e-005	0.0000	0.2977	0.2977	1.0000e-005	0.0000	0.2979
Total	**2.9000e-004**	**3.6900e-003**	**2.1400e-003**	**1.0000e-005**	**8.0000e-005**	**2.0000e-005**	**1.1000e-004**	**8.0000e-005**	**2.0000e-005**	**1.0000e-004**	**0.0000**	**1.0820**	**1.0820**	**5.0000e-005**	**0.0000**	**1.0832**

Mitigated Construction On-Site

	ROG	NOx	CO	SO2	Fugitive PM10	Exhaust PM10	PM10 Total	Fugitive PM2.5	Exhaust PM2.5	PM2.5 Total	Bio- CO2	NBio- CO2	Total CO2	CH4	N2O	CO2e
Category	tons/yr										MT/yr					

Off-Road	3.3300e-003	0.0418	0.0159	5.0000e-005		1.6700e-003	1.6700e-003		1.5300e-003	1.5300e-003	0.0000	4.1913	4.1913	1.2800e-003	0.0000	4.2234
Total	**3.3300e-003**	**0.0418**	**0.0159**	**5.0000e-005**		**1.6700e-003**	**1.6700e-003**		**1.5300e-003**	**1.5300e-003**	**0.0000**	**4.1913**	**4.1913**	**1.2800e-003**	**0.0000**	**4.2234**

Mitigated Construction Off-Site

	ROG	NOx	CO	SO2	Fugitive PM10	Exhaust PM10	PM10 Total	Fugitive PM2.5	Exhaust PM2.5	PM2.5 Total	Bio- CO2	NBio- CO2	Total CO2	CH4	N2O	CO2e
Category	tons/yr										MT/yr					
Hauling	1.1000e-004	3.5500e-003	7.0000e-004	1.0000e-005	1.0000e-004	2.0000e-005	1.2000e-004	3.0000e-005	2.0000e-005	5.0000e-005	0.0000	0.7843	0.7843	4.0000e-005	0.0000	0.7852
Vendor	0.0000	0.0000	0.0000	0.0000	0.0000	0.0000	0.0000	0.0000	0.0000	0.0000	0.0000	0.0000	0.0000	0.0000	0.0000	0.0000
Worker	1.8000e-004	1.4000e-004	1.4400e-003	0.0000	1.6000e-004	0.0000	1.6000e-004	5.0000e-005	0.0000	5.0000e-005	0.0000	0.2977	0.2977	1.0000e-005	0.0000	0.2979
Total	**2.9000e-004**	**3.6900e-003**	**2.1400e-003**	**1.0000e-005**	**2.6000e-004**	**2.0000e-005**	**2.8000e-004**	**8.0000e-005**	**2.0000e-005**	**1.0000e-004**	**0.0000**	**1.0820**	**1.0820**	**5.0000e-005**	**0.0000**	**1.0832**

3.6 Tie Rods - 2017

Unmitigated Construction On-Site

	ROG	NOx	CO	SO2	Fugitive PM10	Exhaust PM10	PM10 Total	Fugitive PM2.5	Exhaust PM2.5	PM2.5 Total	Bio- CO2	NBio- CO2	Total CO2	CH4	N2O	CO2e
Category	tons/yr										MT/yr					
Off-Road	1.1500e-003	0.0112	7.9600e-003	1.0000e-005		7.3000e-004	7.3000e-004		6.7000e-004	6.7000e-004	0.0000	1.0397	1.0397	3.2000e-004	0.0000	1.0477
Total	**1.1500e-003**	**0.0112**	**7.9600e-003**	**1.0000e-005**		**7.3000e-004**	**7.3000e-004**		**6.7000e-004**	**6.7000e-004**	**0.0000**	**1.0397**	**1.0397**	**3.2000e-004**	**0.0000**	**1.0477**

Unmitigated Construction Off-Site

	ROG	NOx	CO	SO2	Fugitive PM10	Exhaust PM10	PM10 Total	Fugitive PM2.5	Exhaust PM2.5	PM2.5 Total	Bio- CO2	NBio- CO2	Total CO2	CH4	N2O	CO2e
Category	tons/yr										MT/yr					
Hauling	0.0000	0.0000	0.0000	0.0000	0.0000	0.0000	0.0000	0.0000	0.0000	0.0000	0.0000	0.0000	0.0000	0.0000	0.0000	0.0000
Vendor	0.0000	0.0000	0.0000	0.0000	0.0000	0.0000	0.0000	0.0000	0.0000	0.0000	0.0000	0.0000	0.0000	0.0000	0.0000	0.0000
Worker	5.0000e-005	4.0000e-005	4.3000e-004	0.0000	1.0000e-005	0.0000	1.0000e-005	1.0000e-005	0.0000	1.0000e-005	0.0000	0.0893	0.0893	0.0000	0.0000	0.0894
Total	**5.0000e-005**	**4.0000e-005**	**4.3000e-004**	**0.0000**	**1.0000e-005**	**0.0000**	**1.0000e-005**	**1.0000e-005**	**0.0000**	**1.0000e-005**	**0.0000**	**0.0893**	**0.0893**	**0.0000**	**0.0000**	**0.0894**

Mitigated Construction On-Site

	ROG	NOx	CO	SO2	Fugitive PM10	Exhaust PM10	PM10 Total	Fugitive PM2.5	Exhaust PM2.5	PM2.5 Total	Bio- CO2	NBio- CO2	Total CO2	CH4	N2O	CO2e
Category	tons/yr										MT/yr					
Off-Road	1.1500e-003	0.0112	7.9600e-003	1.0000e-005		7.3000e-004	7.3000e-004		6.7000e-004	6.7000e-004	0.0000	1.0397	1.0397	3.2000e-004	0.0000	1.0477
Total	**1.1500e-003**	**0.0112**	**7.9600e-003**	**1.0000e-005**		**7.3000e-004**	**7.3000e-004**		**6.7000e-004**	**6.7000e-004**	**0.0000**	**1.0397**	**1.0397**	**3.2000e-004**	**0.0000**	**1.0477**

Mitigated Construction Off-Site

	ROG	NOx	CO	SO2	Fugitive PM10	Exhaust PM10	PM10 Total	Fugitive PM2.5	Exhaust PM2.5	PM2.5 Total	Bio- CO2	NBio- CO2	Total CO2	CH4	N2O	CO2e

Category	tons/yr										MT/yr					
Hauling	0.0000	0.0000	0.0000	0.0000	0.0000	0.0000	0.0000	0.0000	0.0000	0.0000	0.0000	0.0000	0.0000	0.0000	0.0000	0.0000
Vendor	0.0000	0.0000	0.0000	0.0000	0.0000	0.0000	0.0000	0.0000	0.0000	0.0000	0.0000	0.0000	0.0000	0.0000	0.0000	0.0000
Worker	5.0000e-005	4.0000e-005	4.3000e-004	0.0000	5.0000e-005	0.0000	5.0000e-005	1.0000e-005	0.0000	1.0000e-005	0.0000	0.0893	0.0893	0.0000	0.0000	0.0894
Total	**5.0000e-005**	**4.0000e-005**	**4.3000e-004**	**0.0000**	**5.0000e-005**	**0.0000**	**5.0000e-005**	**1.0000e-005**	**0.0000**	**1.0000e-005**	**0.0000**	**0.0893**	**0.0893**	**0.0000**	**0.0000**	**0.0894**

3.7 Structural Backfill - 2017

Unmitigated Construction On-Site

	ROG	NOx	CO	SO2	Fugitive PM10	Exhaust PM10	PM10 Total	Fugitive PM2.5	Exhaust PM2.5	PM2.5 Total	Bio- CO2	NBio- CO2	Total CO2	CH4	N2O	CO2e
Category	tons/yr										MT/yr					
Off-Road	2.1200e-003	0.0152	0.0131	2.0000e-005		1.1700e-003	1.1700e-003		1.1400e-003	1.1400e-003	0.0000	1.7354	1.7354	2.5000e-004	0.0000	1.7417
Total	**2.1200e-003**	**0.0152**	**0.0131**	**2.0000e-005**		**1.1700e-003**	**1.1700e-003**		**1.1400e-003**	**1.1400e-003**	**0.0000**	**1.7354**	**1.7354**	**2.5000e-004**	**0.0000**	**1.7417**

Unmitigated Construction Off-Site

	ROG	NOx	CO	SO2	Fugitive PM10	Exhaust PM10	PM10 Total	Fugitive PM2.5	Exhaust PM2.5	PM2.5 Total	Bio- CO2	NBio- CO2	Total CO2	CH4	N2O	CO2e
Category	tons/yr										MT/yr					
Hauling	1.1000e-004	3.5500e-003	7.0000e-004	1.0000e-005	4.0000e-005	2.0000e-005	6.0000e-005	3.0000e-005	2.0000e-005	5.0000e-005	0.0000	0.7843	0.7843	4.0000e-005	0.0000	0.7852
Vendor	0.0000	0.0000	0.0000	0.0000	0.0000	0.0000	0.0000	0.0000	0.0000	0.0000	0.0000	0.0000	0.0000	0.0000	0.0000	0.0000
Worker	8.0000e-005	6.0000e-005	6.5000e-004	0.0000	2.0000e-005	0.0000	2.0000e-005	2.0000e-005	0.0000	2.0000e-005	0.0000	0.1340	0.1340	0.0000	0.0000	0.1341

Total	**1.9000e-004**	**3.6100e-003**	**1.3500e-003**	**1.0000e-005**	**6.0000e-005**	**2.0000e-005**	**8.0000e-005**	**5.0000e-005**	**2.0000e-005**	**7.0000e-005**	**0.0000**	**0.9182**	**0.9182**	**4.0000e-005**	**0.0000**	**0.9193**

Mitigated Construction On-Site

	ROG	NOx	CO	SO2	Fugitive PM10	Exhaust PM10	PM10 Total	Fugitive PM2.5	Exhaust PM2.5	PM2.5 Total	Bio- CO2	NBio- CO2	Total CO2	CH4	N2O	CO2e
Category	tons/yr										MT/yr					
Off-Road	2.1200e-003	0.0152	0.0131	2.0000e-005		1.1700e-003	1.1700e-003		1.1400e-003	1.1400e-003	0.0000	1.7354	1.7354	2.5000e-004	0.0000	1.7417
Total	**2.1200e-003**	**0.0152**	**0.0131**	**2.0000e-005**		**1.1700e-003**	**1.1700e-003**		**1.1400e-003**	**1.1400e-003**	**0.0000**	**1.7354**	**1.7354**	**2.5000e-004**	**0.0000**	**1.7417**

Mitigated Construction Off-Site

	ROG	NOx	CO	SO2	Fugitive PM10	Exhaust PM10	PM10 Total	Fugitive PM2.5	Exhaust PM2.5	PM2.5 Total	Bio- CO2	NBio- CO2	Total CO2	CH4	N2O	CO2e
Category	tons/yr										MT/yr					
Hauling	1.1000e-004	3.5500e-003	7.0000e-004	1.0000e-005	1.0000e-004	2.0000e-005	1.2000e-004	3.0000e-005	2.0000e-005	5.0000e-005	0.0000	0.7843	0.7843	4.0000e-005	0.0000	0.7852
Vendor	0.0000	0.0000	0.0000	0.0000	0.0000	0.0000	0.0000	0.0000	0.0000	0.0000	0.0000	0.0000	0.0000	0.0000	0.0000	0.0000
Worker	8.0000e-005	6.0000e-005	6.5000e-004	0.0000	7.0000e-005	0.0000	7.0000e-005	2.0000e-005	0.0000	2.0000e-005	0.0000	0.1340	0.1340	0.0000	0.0000	0.1341
Total	**1.9000e-004**	**3.6100e-003**	**1.3500e-003**	**1.0000e-005**	**1.7000e-004**	**2.0000e-005**	**1.9000e-004**	**5.0000e-005**	**2.0000e-005**	**7.0000e-005**	**0.0000**	**0.9182**	**0.9182**	**4.0000e-005**	**0.0000**	**0.9193**

3.8 Clean up Demobilization - 2017

Unmitigated Construction On-Site

	ROG	NOx	CO	SO2	Fugitive PM10	Exhaust PM10	PM10 Total	Fugitive PM2.5	Exhaust PM2.5	PM2.5 Total	Bio- CO2	NBio- CO2	Total CO2	CH4	N2O	CO2e
Category	tons/yr										MT/yr					
Off-Road	4.8000e-004	4.5700e-003	3.5900e-003	0.0000		3.4000e-004	3.4000e-004		3.2000e-004	3.2000e-004	0.0000	0.4331	0.4331	1.3000e-004	0.0000	0.4364
Total	**4.8000e-004**	**4.5700e-003**	**3.5900e-003**	**0.0000**		**3.4000e-004**	**3.4000e-004**		**3.2000e-004**	**3.2000e-004**	**0.0000**	**0.4331**	**0.4331**	**1.3000e-004**	**0.0000**	**0.4364**

Unmitigated Construction Off-Site

	ROG	NOx	CO	SO2	Fugitive PM10	Exhaust PM10	PM10 Total	Fugitive PM2.5	Exhaust PM2.5	PM2.5 Total	Bio- CO2	NBio- CO2	Total CO2	CH4	N2O	CO2e
Category	tons/yr										MT/yr					
Hauling	0.0000	0.0000	0.0000	0.0000	0.0000	0.0000	0.0000	0.0000	0.0000	0.0000	0.0000	0.0000	0.0000	0.0000	0.0000	0.0000
Vendor	0.0000	0.0000	0.0000	0.0000	0.0000	0.0000	0.0000	0.0000	0.0000	0.0000	0.0000	0.0000	0.0000	0.0000	0.0000	0.0000
Worker	7.0000e-005	5.0000e-005	5.4000e-004	0.0000	2.0000e-005	0.0000	2.0000e-005	2.0000e-005	0.0000	2.0000e-005	0.0000	0.1116	0.1116	0.0000	0.0000	0.1117
Total	**7.0000e-005**	**5.0000e-005**	**5.4000e-004**	**0.0000**	**2.0000e-005**	**0.0000**	**2.0000e-005**	**2.0000e-005**	**0.0000**	**2.0000e-005**	**0.0000**	**0.1116**	**0.1116**	**0.0000**	**0.0000**	**0.1117**

Mitigated Construction On-Site

	ROG	NOx	CO	SO2	Fugitive PM10	Exhaust PM10	PM10 Total	Fugitive PM2.5	Exhaust PM2.5	PM2.5 Total	Bio- CO2	NBio- CO2	Total CO2	CH4	N2O	CO2e
Category	tons/yr										MT/yr					

Off-Road	4.8000e-004	4.5700e-003	3.5900e-003	0.0000		3.4000e-004	3.4000e-004		3.2000e-004	3.2000e-004	0.0000	0.4331	0.4331	1.3000e-004	0.0000	0.4364
Total	**4.8000e-004**	**4.5700e-003**	**3.5900e-003**	**0.0000**		**3.4000e-004**	**3.4000e-004**		**3.2000e-004**	**3.2000e-004**	**0.0000**	**0.4331**	**0.4331**	**1.3000e-004**	**0.0000**	**0.4364**

Mitigated Construction Off-Site

	ROG	NOx	CO	SO2	Fugitive PM10	Exhaust PM10	PM10 Total	Fugitive PM2.5	Exhaust PM2.5	PM2.5 Total	Bio- CO2	NBio- CO2	Total CO2	CH4	N2O	CO2e
Category	tons/yr										MT/yr					
Hauling	0.0000	0.0000	0.0000	0.0000	0.0000	0.0000	0.0000	0.0000	0.0000	0.0000	0.0000	0.0000	0.0000	0.0000	0.0000	0.0000
Vendor	0.0000	0.0000	0.0000	0.0000	0.0000	0.0000	0.0000	0.0000	0.0000	0.0000	0.0000	0.0000	0.0000	0.0000	0.0000	0.0000
Worker	7.0000e-005	5.0000e-005	5.4000e-004	0.0000	6.0000e-005	0.0000	6.0000e-005	2.0000e-005	0.0000	2.0000e-005	0.0000	0.1116	0.1116	0.0000	0.0000	0.1117
Total	**7.0000e-005**	**5.0000e-005**	**5.4000e-004**	**0.0000**	**6.0000e-005**	**0.0000**	**6.0000e-005**	**2.0000e-005**	**0.0000**	**2.0000e-005**	**0.0000**	**0.1116**	**0.1116**	**0.0000**	**0.0000**	**0.1117**

4.0 Operational Detail - Mobile

4.1 Mitigation Measures Mobile

	ROG	NOx	CO	SO2	Fugitive PM10	Exhaust PM10	PM10 Total	Fugitive PM2.5	Exhaust PM2.5	PM2.5 Total	Bio- CO2	NBio- CO2	Total CO2	CH4	N2O	CO2e
Category	tons/yr										MT/yr					
Mitigated	0.0000	0.0000	0.0000	0.0000	0.0000	0.0000	0.0000	0.0000	0.0000	0.0000	0.0000	0.0000	0.0000	0.0000	0.0000	0.0000

Unmitigated	0.0000	0.0000	0.0000	0.0000	0.0000	0.0000	0.0000	0.0000	0.0000	0.0000	0.0000	0.0000	0.0000	0.0000	0.0000	0.0000

4.2 Trip Summary Information

	Average Daily Trip Rate			Unmitigated	Mitigated
Land Use	Weekday	Saturday	Sunday	Annual VMT	Annual VMT
User Defined Industrial	0.00	0.00	0.00		
Total	0.00	0.00	0.00		

4.3 Trip Type Information

	Miles			Trip %			Trip Purpose %		
Land Use	H-W or C-W	H-S or C-C	H-O or C-NW	H-W or C-W	H-S or C-C	H-O or C-NW	Primary	Diverted	Pass-by
User Defined Industrial	9.50	7.30	7.30	0.00	0.00	0.00	0	0	0

4.4 Fleet Mix

Land Use	LDA	LDT1	LDT2	MDV	LHD1	LHD2	MHD	HHD	OBUS	UBUS	MCY	SBUS	MH
User Defined Industrial	0.601004	0.039123	0.186461	0.109772	0.016124	0.004965	0.012251	0.019838	0.002045	0.001602	0.005388	0.000616	0.000812

5.0 Energy Detail

Historical Energy Use: N

5.1 Mitigation Measures Energy

	ROG	NOx	CO	SO2	Fugitive PM10	Exhaust PM10	PM10 Total	Fugitive PM2.5	Exhaust PM2.5	PM2.5 Total	Bio- CO2	NBio- CO2	Total CO2	CH4	N2O	CO2e
Category	tons/yr										MT/yr					
Electricity Mitigated						0.0000	0.0000		0.0000	0.0000	0.0000	0.0000	0.0000	0.0000	0.0000	0.0000

Electricity Unmitigated						0.0000	0.0000		0.0000	0.0000	0.0000	0.0000	0.0000	0.0000	0.0000	0.0000
NaturalGas Mitigated	0.0000	0.0000	0.0000	0.0000		0.0000	0.0000		0.0000	0.0000	0.0000	0.0000	0.0000	0.0000	0.0000	0.0000
NaturalGas Unmitigated	0.0000	0.0000	0.0000	0.0000		0.0000	0.0000		0.0000	0.0000	0.0000	0.0000	0.0000	0.0000	0.0000	0.0000

5.2 Energy by Land Use - NaturalGas

Unmitigated

	NaturalGas Use	ROG	NOx	CO	SO2	Fugitive PM10	Exhaust PM10	PM10 Total	Fugitive PM2.5	Exhaust PM2.5	PM2.5 Total	Bio- CO2	NBio- CO2	Total CO2	CH4	N2O	CO2e
Land Use	kBTU/yr	tons/yr										MT/yr					
User Defined Industrial	0	0.0000	0.0000	0.0000	0.0000		0.0000	0.0000		0.0000	0.0000	0.0000	0.0000	0.0000	0.0000	0.0000	0.0000
Total		**0.0000**	**0.0000**	**0.0000**	**0.0000**		**0.0000**	**0.0000**		**0.0000**	**0.0000**	**0.0000**	**0.0000**	**0.0000**	**0.0000**	**0.0000**	**0.0000**

Mitigated

	NaturalGas Use	ROG	NOx	CO	SO2	Fugitive PM10	Exhaust PM10	PM10 Total	Fugitive PM2.5	Exhaust PM2.5	PM2.5 Total	Bio- CO2	NBio- CO2	Total CO2	CH4	N2O	CO2e
Land Use	kBTU/yr	tons/yr										MT/yr					
User Defined Industrial	0	0.0000	0.0000	0.0000	0.0000		0.0000	0.0000		0.0000	0.0000	0.0000	0.0000	0.0000	0.0000	0.0000	0.0000
Total		**0.0000**	**0.0000**	**0.0000**	**0.0000**		**0.0000**	**0.0000**		**0.0000**	**0.0000**	**0.0000**	**0.0000**	**0.0000**	**0.0000**	**0.0000**	**0.0000**

5.3 Energy by Land Use - Electricity

Unmitigated

	Electricity Use	Total CO2	CH4	N2O	CO2e
Land Use	kWh/yr	MT/yr			
User Defined Industrial	0	0.0000	0.0000	0.0000	0.0000
Total		**0.0000**	**0.0000**	**0.0000**	**0.0000**

Mitigated

	Electricity Use	Total CO2	CH4	N2O	CO2e
Land Use	kWh/yr	MT/yr			
User Defined Industrial	0	0.0000	0.0000	0.0000	0.0000
Total		**0.0000**	**0.0000**	**0.0000**	**0.0000**

6.0 Area Detail

6.1 Mitigation Measures Area

	ROG	NOx	CO	SO2	Fugitive PM10	Exhaust PM10	PM10 Total	Fugitive PM2.5	Exhaust PM2.5	PM2.5 Total	Bio- CO2	NBio- CO2	Total CO2	CH4	N2O	CO2e
Category	tons/yr										MT/yr					
Mitigated	0.0000	0.0000	1.0000e-005	0.0000		0.0000	0.0000		0.0000	0.0000	0.0000	2.0000e-005	2.0000e-005	0.0000	0.0000	2.0000e-005
Unmitigated	0.0000	0.0000	1.0000e-005	0.0000		0.0000	0.0000		0.0000	0.0000	0.0000	2.0000e-005	2.0000e-005	0.0000	0.0000	2.0000e-005

6.2 Area by SubCategory

Unmitigated

	ROG	NOx	CO	SO2	Fugitive PM10	Exhaust PM10	PM10 Total	Fugitive PM2.5	Exhaust PM2.5	PM2.5 Total	Bio- CO2	NBio- CO2	Total CO2	CH4	N2O	CO2e
SubCategory	tons/yr										MT/yr					
Architectural Coating	0.0000					0.0000	0.0000		0.0000	0.0000	0.0000	0.0000	0.0000	0.0000	0.0000	0.0000
Consumer Products	0.0000					0.0000	0.0000		0.0000	0.0000	0.0000	0.0000	0.0000	0.0000	0.0000	0.0000
Landscaping	0.0000	0.0000	1.0000e-005	0.0000		0.0000	0.0000		0.0000	0.0000	0.0000	2.0000e-005	2.0000e-005	0.0000	0.0000	2.0000e-005
Total	**0.0000**	**0.0000**	**1.0000e-005**	**0.0000**		**0.0000**	**0.0000**		**0.0000**	**0.0000**	**0.0000**	**2.0000e-005**	**2.0000e-005**	**0.0000**	**0.0000**	**2.0000e-005**

Mitigated

	ROG	NOx	CO	SO2	Fugitive PM10	Exhaust PM10	PM10 Total	Fugitive PM2.5	Exhaust PM2.5	PM2.5 Total	Bio- CO2	NBio- CO2	Total CO2	CH4	N2O	CO2e
SubCategory	tons/yr										MT/yr					
Architectural Coating	0.0000					0.0000	0.0000		0.0000	0.0000	0.0000	0.0000	0.0000	0.0000	0.0000	0.0000
Consumer Products	0.0000					0.0000	0.0000		0.0000	0.0000	0.0000	0.0000	0.0000	0.0000	0.0000	0.0000

Landscaping	0.0000	0.0000	1.0000e-005	0.0000		0.0000	0.0000		0.0000	0.0000	0.0000	2.0000e-005	2.0000e-005	0.0000	0.0000	2.0000e-005
Total	**0.0000**	**0.0000**	**1.0000e-005**	**0.0000**		**0.0000**	**0.0000**		**0.0000**	**0.0000**	**0.0000**	**2.0000e-005**	**2.0000e-005**	**0.0000**	**0.0000**	**2.0000e-005**

7.0 Water Detail

7.1 Mitigation Measures Water

	Total CO2	CH4	N2O	CO2e
Category	MT/yr			
Mitigated	0.0000	0.0000	0.0000	0.0000
Unmitigated	0.0000	0.0000	0.0000	0.0000

7.2 Water by Land Use

Unmitigated

	Indoor/Outdoor Use	Total CO2	CH4	N2O	CO2e
Land Use	Mgal	MT/yr			
User Defined Industrial	0 / 0	0.0000	0.0000	0.0000	0.0000
Total		**0.0000**	**0.0000**	**0.0000**	**0.0000**

Mitigated

	Indoor/Outdoor Use	Total CO2	CH4	N2O	CO2e
Land Use	Mgal	MT/yr			
User Defined Industrial	0 / 0	0.0000	0.0000	0.0000	0.0000
Total		**0.0000**	**0.0000**	**0.0000**	**0.0000**

8.0 Waste Detail

8.1 Mitigation Measures Waste

Category/Year

	Total CO2	CH4	N2O	CO2e
	MT/yr			
Mitigated	0.0000	0.0000	0.0000	0.0000
Unmitigated	0.0000	0.0000	0.0000	0.0000

8.2 Waste by Land Use

Unmitigated

	Waste Disposed	Total CO2	CH4	N2O	CO2e
Land Use	tons	MT/yr			
User Defined Industrial	0	0.0000	0.0000	0.0000	0.0000
Total		**0.0000**	**0.0000**	**0.0000**	**0.0000**

Mitigated

	Waste Disposed	Total CO2	CH4	N2O	CO2e
Land Use	tons	MT/yr			
User Defined Industrial	0	0.0000	0.0000	0.0000	0.0000
Total		**0.0000**	**0.0000**	**0.0000**	**0.0000**

9.0 Operational Offroad

Equipment Type	Number	Hours/Day	Days/Year	Horse Power	Load Factor	Fuel Type

10.0 Stationary Equipment

Fire Pumps and Emergency Generators

Equipment Type	Number	Hours/Day	Hours/Year	Horse Power	Load Factor	Fuel Type

Boilers

Equipment Type	Number	Heat Input/Day	Heat Input/Year	Boiler Rating	Fuel Type

User Defined Equipment

Equipment Type	Number

11.0 Vegetation

A-1.2 Silt Loading

Silt Loading

updated: 7/5/2017

Silt Loading Factor

For entry into CalEEMod - Construction onroad and Operation mobile

Source: ARB 2014: Miscellaneous Process Methodology 7.9 — Entrained Road Travel, Paved Road Dust. https://www.arb.ca.gov/ei/areasrc/fullpdf/full7-9_2016.pdf

Table 6: 2008 Roadway Travel Fractions and VMT (1) Estimates for California Entrained Paved Road Dust

	2008 HPMS Travel Fractions			
County	**Freeway**	**Major**	**Collector**	**Local**
SF - Santa Clara	0.434	0.449	0.054	0.064

TABLE 7: 2008 Silt Loadings and PM10 Emission Factors for California Entrained Paved Road Dust Estimates

	Silt Loadings (g/m2)			
County	**Freeway**	**Major**	**Collector**	**Local**
SF - Santa Clara	0.015	0.032	0.032	0.32

Composite SL **0.043086** *enter into CalEEMod*

NOTE: for operational mobile sources run, must do this as a last step immediately before running the model or else it will default to zero

A-1.3 Truck Trips

Truck Trips

updated:	7/6/2017
lbs/ton	2000
grams/lb	453.592
total days construction	16

Assumptions
Onsite trucks are idling 50% of the time and driving 5 mph 50% of the time
Haul trucks idle 15 minute per trip (this does not overlap with onsite idling)
Pickup truck is LDT2 and gasoline
Pickups to shuttle workers to site: 1 mile one-way trip, 2 workers per vehicle

Onsite Trucks

Phase	#	Truck Type	Days	Hrs/day	EMFAC type	miles	Notes	
Demolition, Clear and Grub	1	Dump Truck	1	8	HHDT - diesel	20		
	1	Pickup	1	8	LDT2 - gas	20		
Site Preparation Equipment Mob Placement Rock Area	1	HD Truck	1	4	HHDT - diesel	10	0.113636	one-way miles from staging to site
Drive Sheets Piles	10	HD Truck	1	8	HHDT - diesel	200	0.227273	rtp miles
Tie Rods	0		0	0		0	18.18182	total miles for pile trucks?
Structural Backfill	1	HD Truck	3	6	HHDT - diesel	0	*covered under truck trips in CalEEMod*	
Clean up Demobilization	1	Truck	1	4	HHDT - diesel	10		
Miscellaneous	0		0	0		0		

Assumptions

Average speed onsite	5	mph
% of time driving	50%	assumption

Miles traveled - total

HHDT - diesel	240
LDT2 - gas	20

EMFAC2014 Web Database Total Emissions
Emissions include all sources *except* idling, which is calculated separately below
Units: miles/day for VMT, trips/day for Trips, tons/day for Emissions, 1000 gallons/day for Fuel Consumption

Vehicle	EF (g/m)			
	ROG	NOX	PM10	PM2.5
HHDT - diesel	1.2526734	21.08753545	0.094341357	0.09026
LDT2 - gas	0.161308	0.257475506	0.010727963	0.00987

Source: EMFAC2014-EI-2007Class-SantaClara-2017-Annual-20170705115651

Emissions	Tons/year				Lbs/day - average			
	ROG	NOX	PM10	PM2.5	ROG	NOX	PM10	PM2.5
HHDT - diesel	0.0003314	0.005578811	2.49585E-05	2.39E-05	0.041425115	0.697351	0.00312	0.002985
LDT2 - gas	3.556E-06	5.67637E-06	2.36511E-07	2.18E-07	0.000444529	0.00071	2.96E-05	2.72E-05
Total	**0.000335**	**0.005584488**	**2.5195E-05**	**2.41E-05**	**0.041869644**	**0.698061**	**0.003149**	**0.003012**

Pickups to bring workers to site

These trucks will shuttle workers from the RWF parking lot to the project site; separate from onsite trucks and worker commutes

Phase	# workers	Work days	# pickups	# trips (one-way)
Demolition, Clear and Grub	5	1	3	6
Site Preparation Equipment Mob Placement Rock Area	4	1	2	4
Drive Sheets Piles	8	5	4	8
Tie Rods	4	3	2	4
Structural Backfill	6	3	3	6
Clean up Demobilization	1	3	1	2
Miscellaneous	0	16	0	0

Pickup occupancy	2	assumption
One-way trip distance (mile)	1	Google maps
Total miles traveled	86	calculation
average speed (mph)	15	assumption

EMFAC2014 Web Database Total Emissions
Emissions include all sources *except* idling, which is calculated separately below
Units: miles/day for VMT, trips/day for Trips, tons/day for Emissions, 1000 gallons/day for Fuel Consumption

Vehicle	EF (g/m)			
	ROG	NOX	PM10	PM2.5
LDT2 - gas	0.070422	0.195912213	0.004562073	0.004198

Source: EMFAC2014-EI-2007Class-SantaClara-2017-Annual-20170706095718

Emissions	Tons/year				Lbs/day - average			
	ROG	NOX	PM10	PM2.5	ROG	NOX	PM10	PM2.5
LDT2 - gas	6.676E-06	1.85723E-05	4.32479E-07	3.98E-07	0.000834491	0.002322	5.41E-05	4.97E-05
Total	**6.676E-06**	**1.85723E-05**	**4.32479E-07**	**3.98E-07**	**0.000834491**	**0.002322**	**5.41E-05**	**4.97E-05**

Truck Idling Emissions

Idle time per Truck (min)	15	The Project would be required to comply with the CARB Air Toxics Control Measure that limits diesel powered equipment and vehicle idling to no more than 5 minutes at a location. 5 minutes each for check-in, check-out, and on-site idling
% of time idling for onsite trucks	50%	assumption
value entered into CalEEMod		

Phase	Truck Trips	Onsite hours Idling		
	HHDT	HHDT	onsite pickup	shuttle pickups
Demolition, Clear and Grub		4	4	1.5
Site Preparation Equipment Mob Placement Rock Area		2		1
Drive Sheets Piles	20	40		10
Tie Rods		0		3
Structural Backfill	20			4.5
Clean up Demobilization		2		1.5
Miscellaneous		0		0
Total	**40**	**48**	**4**	**21.5**

HHDT - diesel	88
LDT2 - gas	25.5

EMFAC2011 Idling Emission Rates (g/hr-veh)

CY	EMFAC2007	Fuel_Type	air_basin	season	HC (g/hr-veh)	CO (g/hr-ve	NOX (g/hr-	PM10 (g/hr	PM2.5 (g/h	CO2 (g/hr-v	CO2 (with I	TOG (g/hr-	ROG (g/hr-	Sox (g/hr-v
2017	HHDT	D	SF	a	4.835471084	34.2501	56.06347	0.134871	0.124082	7047.255	6694.892	6.971299	6.123641	0.067234
2017	MHDT	D	SF	a	1.534347168	22.19465	70.31455	0.246082	0.226395	7563.871	7185.677	2.212068	1.943097	0.072163

Source:

Emissions	Tons/year				Lbs/day - average			
	ROG	NOX	PM10	PM2.5	ROG	NOX	PM10	PM2.5
HHDT - diesel	0.000594	0.005438351	1.3083E-05	1.2E-05	0.074251802	0.679794	0.001635	0.001505
LDT2 - gas	5.462E-05	0.001976469	6.91711E-06	6.36E-06	0.006827306	0.247059	0.000865	0.000795
Total	**0.0006486**	**0.00741482**	**2.00001E-05**	**1.84E-05**	**0.081079107**	**0.926853**	**0.0025**	**0.0023**

A-1.4 CalEEMod Output Summary

CalEEMod Outputs

updated: 7/5/2017

Paste from *OutputSummary_v1.xlsx* file

Construction

Summary NOT USED **Annual Emissions (tons/year)**

Year	Category 1	Category 2	Mit / Unmit	ROG	NOX	CO	SOX	PM10 Exh	PM10 Dst	PM10 T	PM2.5 Ex	PM2.5 Dst	PM2.5 T
2017	Fugitive Dust	Offroad Equipment	Unmitigated	-	-	-	-	-	-	-	-	-	-
2017	Off-Road	Offroad Equipment	Unmitigated	0.023	0.180	0.134	0.000	0.011	-	0.011	0.011	-	0.011
2017	Paving	Offroad Equipment	Unmitigated	-	-	-	-	-	-	-	-	-	-
2017	Archit. Coating	Offroad Equipment	Unmitigated	-	-	-	-	-	-	-	-	-	-
2017	Hauling	Onroad Truck Travel	Unmitigated	0.000	0.007	0.001	0.000	0.000	0.000	0.000	0.000	0.000	0.000
2017	Vendor	Onroad Truck Travel	Unmitigated	-	-	-	-	-	-	-	-	-	-
2017	Worker	Worker Commute	Unmitigated	0.000	0.000	0.003	-	-	0.000	0.000	-	0.000	0.000

APPENDIX B

Biological Resources Technical Memorandum

Final

POND A18 SOUTH GATE LEVEE REPAIR PROJECT

Biological Resources Technical Memorandum

Prepared for
Cathy Correia, Acting Environmental Compliance Officer, Sustainability & Compliance Division| Environmental Services Department,
City of San José

August 2017

180 Grand Avenue
Suite 1050
Oakland, CA 94612
510.839.5066
www.esassoc.com

ESA

Bend	Oakland	San Francisco
Camarillo	Orlando	Santa Monica
Delray Beach	Pasadena	Sarasota
Destin	Petaluma	Seattle
Irvine	Portland	Sunrise
Los Angeles	Sacramento	Tampa
Miami	San Diego	

TABLE OF CONTENTS

Biological Resources Technical Memorandum

Page

Acronyms and Abbreviations....iii

1.0 Introduction....1
- 1.1 Review of Background Information....1
- 1.2 Covered Species....4

2.0 Project Description....7
- 2.1 Schedule....9
- 2.2 Methods....9
- 2.3 Areas and Volumes of Fill....11

3.0 Avoidance, Minimization, and Conservation Measures....14

4.0 Environmental Baseline....18
- 4.1 Reconnaissance-Level Survey....18
- 4.2 Open Water....18
- 4.3 Tidal Freshwater Marsh....19
- 4.4 Non-tidal Freshwater Marsh....20
- 4.5 Bareground/Peripheral Halophyte Zone....20
- 4.6 Waters of the U.S./Waters of the State....21
- 4.7 Migratory Birds and Raptors....21
- 4.8 Wildlife Movement Corridors....21

5.0 USFWS-listed Species....23
- 5.1 USFWS Aquatic Species....23
  - 5.1.1 Effects on Aquatic Species....24
- 5.2 USFWS Terrestrial Species....26
  - 5.2.1 Effects on Terrestrial Species....27

6.0 NMFS-listed Species....28
- 6.1 NMFS Species....29
  - 6.1.1 Effects on Aquatic Species....30

7.0 CDFW-listed Species....34
- 7.1 CDFW Aquatic Species....34
  - 7.1.1 Effects on Aquatic Species....36
- 7.2 CDFW Terrestrial Species....38
  - 7.2.1 Effects on Terrestrial Species....40

8.0 Conclusions and Determinations....43
- 8.1 ESA Section 7....43
  - 8.1.1 Federal ESA Protected and Candidate Aquatic Species (NMFS and USFWS)....43
  - 8.1.2 Federal-ESA Protected Terrestrial Species (USFWS)....44

Page

8.2 Magnuson-Stevens Fishery Conservation and Management Act (Essential Fish Habitat) 44
8.3 Summary of Effects 44

List of Figures

Figure 1 Project Vicinity 2
Figure 2 Project Location 3
Figure 3 Project Site Plan 8
Figure 4 Locations of Fill Placement 13

List of Tables

Table 1 Potentially Occurring Special-Status Species Within the Study Area 5
Table 2 Summary of Areas and Volume of Fill 11
Table 3 Effects on Natural Communities due to Fill 45

List of Attachments

A Special-Status Species Occurrences in Nine-Quad Search Encompassing Study Area

Acronyms and Abbreviations

A&M	avoidance and minimization
BCC	Bird of Conservation Concern
BMP	best management practices
Caltrans	California Department of Transportation
CCC	Central California Coast
CDFW	California Department of Fish and Wildlife
CE	Candidate Endangered
CESA	California Endangered Species Act
City	City of San José
CNDDB	California Natural Diversity Database
CNPS	California Native Plant Society
CV	Central Valley
dB	decibels
EFH	Essential Fish Habitat
EIR	Environmental Impact Report
ESA	Environmental Science Associates
FC	Federal Candidate Species
FE	Federally Endangered
FESA	Federal Endangered Species Act
FMP	fisheries management plan
FP	Fully Protected
ft^2	feet squared
FT	Federally Threatened
HTL	high-tide line
IEP	Interagency Ecological Program
IHA	Incidental Harassment Authorization
IS	Initial Study
MMPA	Marine Mammal Protection Act
MND	Mitigated Negative Declaration

MSA	Magnuson-Stevens Fishery Conservation and Management Act
NMFS	National Marine Fisheries Service
NOAA	National Oceanic and Atmospheric Administration
ppt	parts per thousand
RWF	San José-Santa Clara Regional Wastewater Facility
SE	State Endangered
SEL	sound exposure level
$SEL_{accumulated}$	accumulated sound exposure level
SSC	Species of Special Concern
ST	State Threatened
USFWS	U.S. Fish and Wildlife Service
yd^3	cubic yard

1.0 Introduction

This technical memorandum has been prepared in support of the City of San José (City) and the San José-Santa Clara Regional Wastewater Facility (RWF) in regard to the Pond A18 South Gate Levee Repair Project. This purpose of this memorandum is to review the Project in sufficient detail to determine what extent the proposed construction activities may affect aquatic or terrestrial species listed as threatened, endangered, or candidate species, along with any designated critical habitats identified in the study area. This document presents technical information about the proposed Project only as it relates to potential effects to threatened, endangered, or proposed threatened or endangered aquatic or terrestrial species and their habitat.

The content of this memorandum supports consultation with the National Marine Fisheries Service (NMFS) and U.S. Fish and Wildlife Service (USFWS) under Section 7 of the Federal Endangered Species Act (FESA); consultation with the California Department of Fish and Wildlife (CDFW) under the California Endangered Species Act (CESA); and Essential Fish Habitat (EFH) consultation under the Magnuson-Stevens Fishery Conservation and Management Act (MSA). This document does not present detailed information regarding the Marine Mammal Protection Act (MMPA), as no harassment or harm to marine mammals protected under the MMPA is expected to result from Project implementation, and no Incidental Harassment Authorization (IHA) permit will be sought from NMFS.

This document includes two different terms to describe the area around the South Gate and the biological resources located near it. The “study area” is the area investigated in the reconnaissance-level biological surveys and the jurisdictional wetland delineation. It is a larger area than that in which the Project activities would take place. The second term “Project site” includes the South Gate Structure and the open water, vegetation, and levee sections immediately adjacent to it. These are the areas in which direct, indirect, or cumulative effects could occur to aquatic or terrestrial biological resources as a result of the Project. **Figures 1** and **2** show the regional and local environments that surround the Project site.

1.1 Review of Background Information

Existing and historic biological survey data for biological resources within the study area were accessed and reviewed by Environmental Science Associate’s (ESA) biologists, prior to performing the site visit and the drafting of this document. In part, field surveys provided confirmation of the general accuracy of publicly available data. Data sources that were reviewed for this analysis include:

- Historic and existing aerial imagery;

SOURCE: ESRI; ESA, 2017

Pond A18 South Gate Levee Repair Project

Figure 1
Project Vicinity

ESA

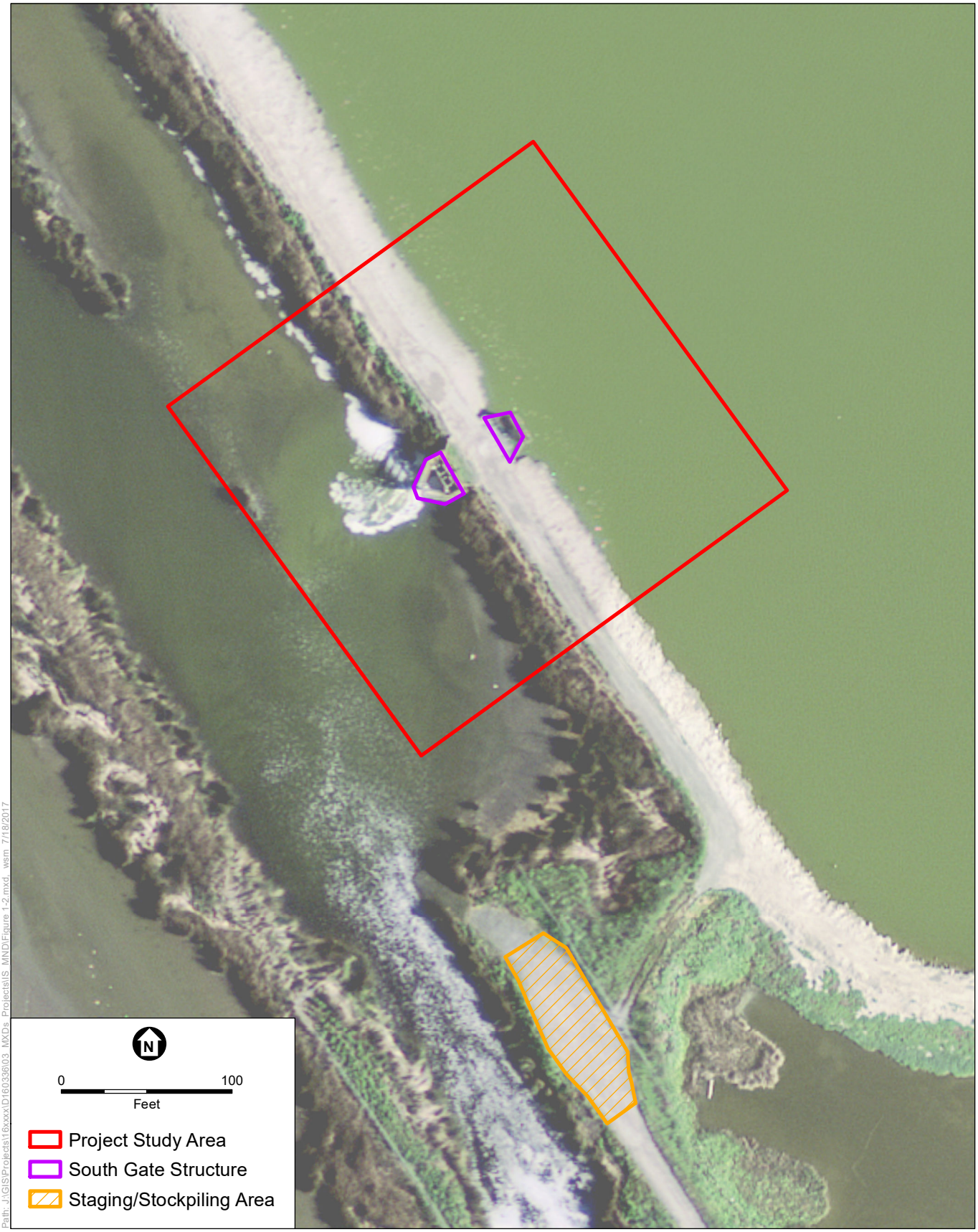

Path: J:\GIS\Projects\16xxxx\D160336\03_MXDs_Projects\IS_MND\Figure 1-2.mxd, wsm, 7/18/2017

SOURCE: ESRI; ESA, 2017

Pond A18 South Gate Levee Repair Project

Figure 2
Project Location

ESA

- CDFW California Natural Diversity Database (CNDDB) (Milpitas quadrangle as well as surrounding eight quadrangles)[1];
- California Native Plant Society (CNPS) online database[2];
- USFWS Endangered Species List Generator[3];
- NMFS West Coast Region – California Intersection of Milpitas USGS 7.5" Topographic Quadrangle with NOAA Fisheries FESA Listed Species[4];
- Best available scientific literature and survey records.

The Project site falls outside the area designated under the Santa Clara Valley Habitat Plan, and, as such, is not beholden to the policies contained therein.

1.2 Covered Species

A list of special-status species with the potential to occur within or in the vicinity of the study area was compiled based on a nine-quad search of the CNDDB and CNPS Rare Plant Inventory, a nine-quad search from the U.S. Fish and Wildlife Service endangered species database, and biological literature of the region for the 7.5-minute USGS topographic quadrangles surrounding the project site.

From the full list of species, each was then individually assessed based on habitat requirements and distribution relative to vegetation communities that occur within and around the study area. No federal- or state-listed plant or animal species were identified during the reconnaissance-level site visit and survey. No special-status plants were determined to have a moderate or high potential to occur on the Project site. **Table 1** displays the special-status aquatic and terrestrial animals that were considered in this document.

1 CDFW, 2017. California Natural Diversity Database for 7.5-minute topographic quadrangles Milpitas, Mountain View, Calaveras Reservoir, Newark, Niles, La Costa Valley, Cupertino, San Jose East, and San Jose West, Commercial Version. Accessed March, 2017.

2 CNPS, Rare Plant Program. 2017. Inventory of Rare and Endangered Plants (online edition, v8-03 0.39). California Native Plant Society, Sacramento, CA.

3 USFWS, 2017. List of threatened and endangered species that may occur in San Jose RWF Pond A18 Levee Repair Project location, and/or may be affected by your proposed project. Consultation Code: 08FBDT00-2017-SLI-0147. April 11, 2017.

4 NMFS, 2017. NOAA Fisheries FESA Listed Species. Accessed March 2017.

TABLE 1
POTENTIALLY OCCURRING SPECIAL-STATUS SPECIES WITHIN THE STUDY AREA

Common Name	Scientific Name	Status[1] (Federal/State/ Other)	Habitat Requirements	Potential to Occur
Fish				
Steelhead – California Central Coast DPS	*Oncorhynchus mykiss*	FT/-/-	Requires cold, freshwater streams with suitable gravel for spawning. Rears in rivers and tributaries to the San Francisco Bay.	**Moderate.** Known to occur in multiple South Bay streams including the neighboring Guadalupe River and Coyote Creek watersheds. Likely seasonally present in the waters adjacent to Artesian Slough (Leidy et al. 2005).
Chinook Salmon – Central Valley fall-run ESU	*Oncorhynchus tshawytscha*	-/SSC/-	Requires cold, freshwater streams with suitable gravel for spawning. Rears in rivers and tributaries to the San Francisco Bay.	**Moderate.** Known to occur in small numbers in multiple South Bay streams including the nearby Guadalupe River (Leidy 2007). Genetic analysis has determined that Chinook in South Bay streams are likely derived hatchery stock (Moyle, 2002).
North American Green Sturgeon – Southern DPS	*Acipenser medirostris*	FT/SSC/-	Adults found in coastal waters from Canada to Mexico. Requires cold, freshwater streams with suitable gravel for spawning; rears in seasonally inundated floodplains, rivers, tributaries, and Delta.	**Low.** Enter freshwater rivers from Canada south to the Sacramento River only to spawn—March to July. Most likely occur during migratory periods but are rarely recorded in South San Francisco Bay.
Longfin Smelt	*Spirinchus thaleichthys*	FC/ST/-	Juvenile and subadults predominately inhabit brackish water areas of the estuary and nearshore coastal waters. Adults return to spawn in the freshwater regions of the lower Sacramento River, near or downstream of Rio Vista, and the lower San Joaquin River downstream of Medford Island.	**Moderate.** Known to utilize portions of Artesian Slough and surrounding South Bay habitat when appropriate water quality conditions occur.
Pacific lamprey	*Entosphenus tridentatus*	-/SSC/-	Requires cold, freshwater streams with suitable gravel for spawning. Rears in rivers and tributaries to the San Francisco Bay.	**Moderate.** Known to occur in small numbers in multiple South Bay streams including the nearby Coyote Creek and Guadalupe River (Leidy 2007).
Reptiles				
Western pond turtle	*Emys marmorata*	-/SSC/-	Requires aquatic habitat with suitable access to basking and upland habitats.	**Moderate.** Potential to occur within Coyote Creek and Alviso Slough, towards the northern portion of the study area.
Mammals				
Salt marsh harvest mouse	*Reithrodontomys raviventris*	FE/SE;FP/-	Salt marsh harvest mice inhabit pickleweed habitat and other salt marsh vegetation within the greater San Francisco Bay region.	**Moderate.** Potential to occur within Coyote Creek and Artesian Slough, towards the northern portion of the study area where suitable habitat exists.
Birds				
Ridgeway's rail	*Rallus obsoletus*	FE/SE;FP/-	Ranges along the Pacific Coast within Monterey and San Luis Obispo Counties. Found in the tidal mudflats and sloughs of the San Francisco Bay-Delta.	**Moderate.** Known to occur in the tidal marsh habitat found at the confluence of Artesian Slough and Coyote Creek, as well as the Coyote Creek and Alviso Slough confluence.
Northern harrier	*Circus cyaneus*	-/SSC/-	Often frequents fresh and saltwater emergent vegetation habitat of the San Francisco Bay region.	**Moderate.** Potential to occur within the emergent wetland habitat adjacent to the study area.

TABLE 1 (CONTINUED)
POTENTIALLY OCCURRING SPECIAL-STATUS SPECIES WITHIN THE STUDY AREA

Common Name	Scientific Name	Status[1] (Federal/State/ Other)	Habitat Requirements	Potential to Occur
Birds (cont.)				
Tricolored blackbird	*Agelaius tricolor*	-/CE/BCC	Nests colonially over or near freshwater, in dense cattails, tules, or thickets of willow, blackberry, wild rose or other tall shrubs.	**Moderate.** Known to utilize the densely vegetated marsh portions of Artesian Slough for nesting habitat.
Saltmarsh common yellowthroat	*Geothlypis trichas sinuosa*	-/SSC/BCC	Found in Marin, Napa, Sonoma, Solano, San Francisco, San Mateo, Santa Clara, and Alameda counties within freshwater marshes in summer and salt or brackish marshes in fall and winter.	**Moderate.** Potential to occur within the fresh and saltwater marsh vegetation along Artesian and Alviso sloughs.
Alameda song sparrow	*Melospiza melodia pusillula*	-/SSC/BCC	Found in the brackish marshes vegetated with pickleweed along the southern portion of the San Francisco Bay.	**Moderate.** Potential to occur within the brackish marsh vegetation along Artesian and Alviso sloughs and Coyote Creek.
Critical Habitat				
Steelhead – California Central Coast DPS	*Oncorhynchus mykiss*	FT/-/-	Not applicable.	**Not Present.** Designated Critical Habitat for this species does not extend this far into Artesian Slough.
North American Green Sturgeon – Southern DPS	*Acipenser medirostris*	FT/SSC/-	Not applicable.	**Not Present.** Designated Critical Habitat for this species does not extend this far into Artesian Slough.
Essential Fish Habitat				
Pacific Coast Salmon Fishery Management Plan	*Oncorhynchus spp.*	-/SSC/-	Not applicable.	**Present.** Per definitions in the Magnuson-Stevens Act and as shown on NOAA Fisheries' EFH Habitat mapper.
Pacific Groundfish Fishery Management Plan	Several species	-/SSC/-	Not applicable.	**Present.** Per definitions in the Magnuson-Stevens Act and as shown on NOAA Fisheries' EFH Habitat mapper.
Coastal Pelagic Fishery Management Plan	Several species	-/SSC/-	Not applicable.	**Present.** Per definitions in the Magnuson-Stevens Act and as shown on NOAA Fisheries' EFH Habitat mapper.

[1] Description of status codes:
ESU = Evolutionarily Significant Unit, DPS = Distinct Population Segment

Federal Listings
FE = Listed as endangered under the FESA
FT = Listed as threatened under the FESA
FC = Candidate for listing under the FESA
BCC = Bird of Conservation Concern (USFWS)

State Listings
SE = Listed as endangered under the CESA
ST= Listed as threatened under the CESA
SSC = Species of Special Concern (CDFW)
CE = Candidate Endangered (CDFW)
FP = Fully Protected (CDFW)

2.0 Project Description

This section presents a summary of the project description, specifically the key elements with potential to affect biological resources in the study area. For a detailed description of the proposed Project, including background and other pertinent information please see the full project description submitted along with this document. In brief, the continued erosion of the levee adjacent to the RWF's South Gate Structure threatens its immediate stability. Specifically, the erosion has advanced such that future maintenance access along the crest of the levee is threatened, which would inhibit management of the current water quality program. Recent observations have indicated that the heavy storms of winter 2016-2017 have sped the erosion and increased the chance of a levee failure unless a repair is made to increase the resistance to further scour or other forms of degradation. The proposed Project would implement a levee repair solution without requiring replacement of the South Gate Structure or adding concrete or other forms of fill to the bottom of Artesian Slough. Instead, it limits fill to the area of the levee in its original condition (i.e., before the erosional losses).

The proposed Project is a repair of failing sections of the levee on each side of the Pond A18 South Gate Structure. As noted above, portions of the original levee have eroded away; therefore, the City proposes to place sheet piles and backfill behind them within the original levee footprint to replace the eroded material and restore the South Gate Structure and its adjoining levee to its original size and allow it to function as it had prior to the erosive losses. As **Figure 3** illustrates, the repair involves placing sheet piles into the levee so as to extend from a relatively undamaged portion of the levee, across the eroded/damaged area, and connect to each of the four wing walls of the existing South Gate Structure. There would thus be four rows of sheet piles, with each row being of different lengths to cross the voids of different sizes at each of the South Gate's four corners. Each row would be of a different length, as listed below. The planned lengths, rounded up to the nearest linear foot, are as follows:

- Northeast corner = 46 feet
- Southeast corner = 33 feet
- Southwest corner = 37 feet
- Northwest corner = 51 feet

Thus, the planned total length of these sheet pile rows is 167 feet, though the actual total length may be slightly longer, with the added length extending farther into the undamaged portion of the levee to add stability. The four sheet pile rows would be arranged roughly parallel with the long axis of the levee alignment. Each sheet pile row would consist of individual z-type steel sheet piles that would be driven vertically into the levee side slope and/or the interior of Pond A18 or Artesian Slough. Each sheet pile would be 35–40 feet long (vertically), 28–35 inches wide, and driven downward until its top end was approximately level with the top of the levee surface elevation. That levee surface varies but it is typically at approximately 11–12.5 feet NAVD88).

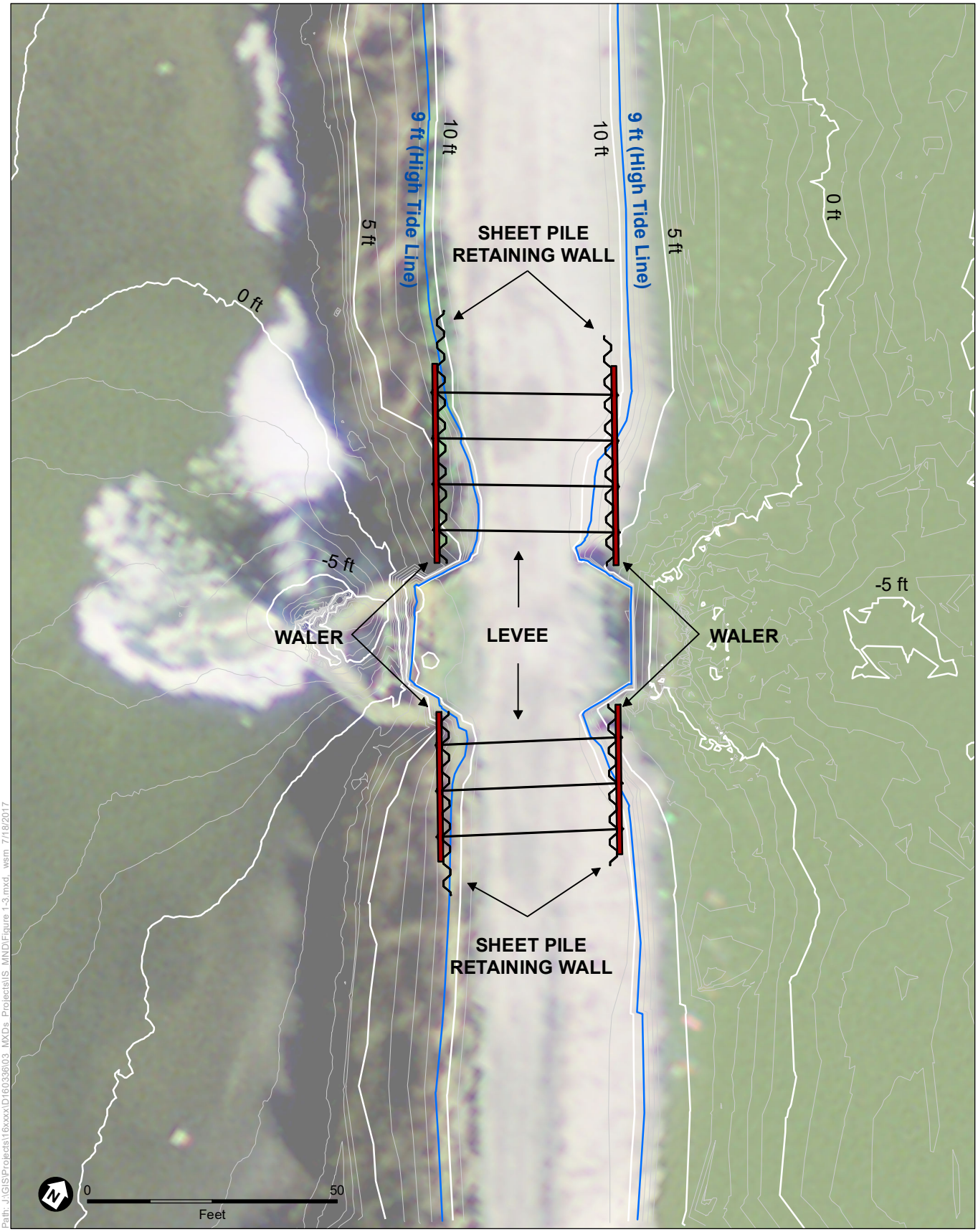

SOURCE: HydroScience Engineers, 2017; ESA, 2017

Pond A18 South Gate Levee Repair Project

Figure 3
Project Site Plan

ESA

Once the four sheet pile rows are in place, 30- to 40-foot long steel walers[5] would be placed on the water side of each sheet pile row and connected with tie rods to the corresponding sheet pile and walers on the other side of the levee. The tie rods would be installed in narrow trenches approximately two to three feet deep excavated across the levee top (above the high-tide line). The tie rods and walers would then be at approximately 10 feet elevation NAVD88. The tie rods are needed to strengthen the repair and reduce the required depth of the sheet piles. The excavated material would cover the tie rods once installed, and the levee crown would be regraded and surfaced as needed. Finally, the eroded areas would be backfilled with rock aggregate to fill the voids between the sheet pile row, the wing walls of the South Gate Structure, and the remaining section of levee.

The planned staging/stockpiling area is approximately 0.1 acre (up to 140 feet by 35 feet) of existing levee access road and other compacted and unvegetated turnout areas. This area would not be modified for Project implementation or otherwise affected by Project activities. In addition, another approximately 600 feet of existing levee roads between the staging area and the South Gate structure would be used for construction access.

2.1 Schedule

Project construction would occur over a period of up to 30 days. Within the 30-day time frame, design plans call for approximately 16–20 working days. Of those working days, there are 6–8 days of in-water work expected. Work is not expected to take place at night or on the weekends, though weekend work may be necessary to finish construction prior to winter rain.

The City intends to complete construction of the Project in October 2017. However, if the Project experiences unforeseen delays, construction will take place within the agency-prescribed environmental work windows in 2018.

2.2 Methods

As noted above, the construction activities in the proposed Project are limited to the levee repair, which would be performed by placing sheet piles and backfill material into the eroded portions of the levee and using walers and tie rods to further stabilize the levee's side slopes. The rest of this section explains the construction methods that would be used to implement the Project. The bullets provide more detail on the repair equipment, timing, and sequence of steps in the levee stabilization plan.

- ***Mobilization:*** The construction contractor would mobilize to the Project site and establish a staging and stockpile area. The Project site would be accessed from the levee road through the gated entry from Los Esteros Road. Construction equipment would be transported to the site, and necessary materials, including sheet piles, and tie rods, would be delivered to the

[5] Walers are long horizontal structural beams attached to the outside of the sheet pile by long rods threaded at the ends called, tie rods. Walers are designed to transmit loads from the levee's soil and backfill material through the sheet piles and to the tie rods. This braces the levee and transfers the retained load evenly between tie rod connection points on each side of the levee.

stockpile area. Standard haul trucks would be used for these deliveries. This is expected to take up to two days.

- ***Installation of construction best management practices (BMPs):*** The contractor would establish erosion protection measures to minimize erosion into the pond and slough. These measures would generally consist of silt fences, straw wattles, and gravel bags. These BMPs would help reduce siltation and other environmental impacts.

- ***Site preparation:*** The construction contractor would clear and grub the site to remove vegetation and provide clean and accessible areas in which to place the sheet piles. Clearing and grubbing would be done with a backhoe. Throughout construction, all work would take place from the levee top. All equipment used in conjunction with this action would operate from dry areas only; no equipment would operate in-water. An area of approximately two to three feet on each side of the four rows of sheet piles would be cleared of vegetation. The maximum total combined area of potential vegetation removal is up to 1,000 square feet; however, because some of the sheet piles would be placed in unvegetated sections of existing levee, and some would be placed directly into water, the actual area of vegetation removal would be less than that. A biological monitor would first survey the site to check for special-status species and implement avoidance measures if active nests or individuals are located. If an active nest is found in proximity to the site, avoidance measures would be employed; these include a no-work buffer until the bird has fledged. This work is expected to take up to two days.

- ***Sheet pile placement:*** The four rows of sheet piles would be constructed (as described above) using a vibratory pile driver, which would reduce noise-related environmental impacts. A crane would be used to move the sheet piles into place. This work is expected to take up to four to eight days, but much of that would not be "in-water work" because many of the piles would be going into the levee top surface or side slopes, or because the piles would be driven at low-tide to the extent practicable within other schedule constraints.

- ***Tie rod placement:*** As described above, the channels for the tie rods would be excavated using a backhoe. The tie rods would be epoxy coated for corrosion resistance. The rest of the trenches would then be backfilled with soil and aggregate base (crushed rock). A backhoe/loader would be used to replace the material and regrade the levee surface. This is expected to take up to three days, but it is not in-water work.

- ***Backfill:*** A backhoe would be used to place the rock aggregate into each of the four holes around the South Gate Structure. The backfill material would then be compacted with a plate compacter. This work is expected to take up to two days. The total areas and volumes of fill planned for the proposed Project are presented in **Table 2**.

- ***Site Restoration and demobilization:*** Following the work described above, the levee crown would be regraded to the pre-project conditions. Construction haul trucks would be used to remove equipment and any surplus materials from the site. No revegetation of levee side slopes is proposed. Trash or debris would be removed and the surface of the levee would be restored to pre-project conditions. This is expected to take up to three days.

TABLE 2
SUMMARY[1] OF AREAS AND VOLUME OF FILL

Corner	Area (ft^2)	Fill Volume (yd^3) [2]
Total Quantities of Fill Material		
Southwest	242	**15**
Southeast	162	18
Northwest	384	48
Northeast	284	19
Total[3]	**1,072**	**100**
Quantities Placed at or Below 9 Foot Elevation NAVD88		
Southwest	101	7
Southeast	56	3
Northwest	242	21
Northeast	101	8
Total[3]	**500**	**39**

NOTES:

1 The volume and area of sheet piles and backfill material are presented together; the sheet piles make a *de minimus* contribution (estimated at 2-4%) to the total volume of fill to be placed.
2 Fill volumes were estimated from preliminary designs. The total volume of backfill material would not exceed 100 cubic yards.
3 Sum of individual rows may not equal the presented total due to rounding.

2.3 Areas and Volumes of Fill

This section presents the total areas and volumes of fill material and the portion of that material that would be placed in water, marsh vegetation, or other habitat areas. The analysis presented in several sections of the rest of this document draws upon these estimates and includes them in assessing potential impacts on the local hydrology, water quality, biological resources, or other conditions as appropriate.

As described above, and as shown in **Figure 4**, the actual area of direct effect from project construction is limited to the area where the sheet piles, tie rods, and backfill would be placed. That area would be approximately 3,600 square feet (0.08 acre). Of that area, approximately one-third is the existing levee top road that would be replaced and restored to pre-project conditions.

Of the remainder, only the portions of the sheet piles and backfill material (rock aggregate) placed below the mapped high-tide line (HTL) would be in-water work. The delineation of jurisdictional wetlands conducted for the Project field-mapped the HTL at 9 feet elevation NAVD88. Therefore, only the areas and volumes of fill below that elevation are considered impacts to waters of the U.S. or of the State of California. The potential habitat for special-status species is similarly limited to waters (for fish species) or marsh/wetlands (for terrestrial species in that elevation range).

Designs call for 167 linear feet of sheet piles to be placed, but as noted above, there could be additional length added into the existing and more structurally sound portions of the levee. Thus, of the 167 to 200 linear feet of sheet piles to be placed, only a relatively small portion of the piles would be placed below the HTL. Everything else would either be within the levee itself or extending out of the upper part of the levee side slopes and would thus be in the air and above USACE jurisdiction. Once the sheet piles are installed, aggregate rock would be placed within the void between the existing levee and sheet piles. No tie rods or steel walers would be placed in water, as they would be located well above the HTL.

As described in more detail in the sections that follow, for consideration of possible impacts on endangered species, their habitats, and other protected biological resources, the HTL is also an important delineation of boundaries between habitats. Everything above that elevation in the Project site and its immediately surroundings is either levee-top road or the uppermost side slopes of the levee. The levee top is unvegetated, as are most of the upper side slopes, particularly in the areas of greatest erosion, where the slopes are almost vertical down into the mid- and low intertidal zone on each side of the levee. What vegetation is growing above the HTL is patchy, isolated, typically ruderal, and of extremely limited habitat value for protected species.

The total areas and volumes of fill to be placed below 9 feet elevation NAVD88 are presented in **Table 2**. The areas are also illustrated on **Figure 4**, which shows the areas of project impacts. All areas were calculated in GIS based on the CAD files received from HydroScience Engineers. The volumes for fill placed below 9 feet elevation were derived by HydroScience Engineers directly from the engineering drawings prepared by California Engineering and Geology. The total volume of backfill material would not exceed 100 cubic yards, but the allocation of that total across the four corners of the South Gate Structure was not directly calculated.

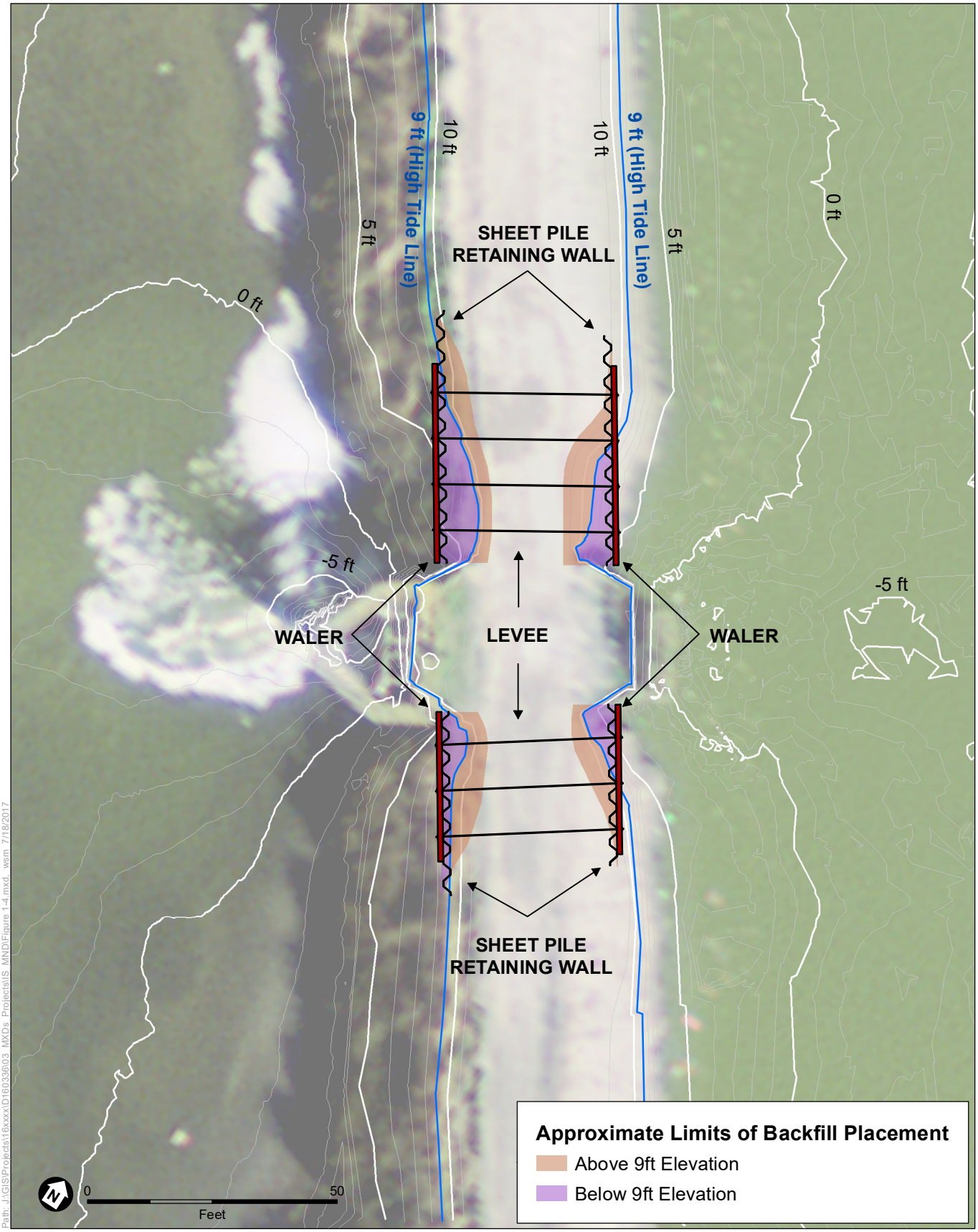

SOURCE: HydroScience Engineers, 2017; ESA, 2017

Pond A18 South Gate Levee Repair Project

Figure 4
Locations of Fill Placement

ESA

3.0 Avoidance, Minimization, and Conservation Measures

The below-outlined avoidance and minimization (A&M) measures, BMPs, and conservation measures are proposed by the City, in order to avoid and minimize potential Project effects on listed species and their habitats. The proposed avoidance, minimization, and conservation measures are consistent with input from regulatory agencies during pre-permitting outreach and include: the majority of the criteria established under the USACE/NMFS 2013 NLAA Program, conditions of recent permits and Biological Opinions issued for similar waterfront work, and measures from similar projects in the San Francisco Bay Area. They are also consistent with the mitigation measures described in the Initial Study/Mitigated Negative Declaration (IS/MND) prepared for this Project. Those measures draw on relevant and applicable measures from the RWF's Master Plan Environmental Impact Report (EIR).

The following avoidance, minimization, and conservation measures would be implemented by the City to avoid or reduce potential effects to the sensitive natural resources addressed in this document:

1. Construction Worker- and Vehicle-related Measures

a. Prior to construction, all construction workers shall take part in an environmental awareness program reviewed by an agency-approved biologist. The work crews shall be trained in standard procedures for identifying and avoiding impacts to all special-status species with the potential to occur in the work area. The awareness program will be conducted at the start of construction and thereafter as required for new construction personnel.

b. The area beneath vehicles or equipment parked in the work area shall be checked for the presence of salt marsh harvest mouse and other wildlife before being moved, during construction in the roadway, and during movement of staging materials within the entire Project site.

2. Special-Status Fish and Aquatic Species Protection Measures

a. A biological monitor approved by NMFS, USFWS, and CDFW shall be on-site during pile driving to inspect the work zone and adjacent waters and monitor the construction contractor's compliance with these mitigation measures and with the permit conditions.

b. The project proponent and its contractors shall conduct in-water work only during the National Oceanic and Atmospheric Administration (NOAA)-approved work window.

c. Sheet piles shall be installed using a vibratory pile driver to minimize noise impacts on fish and wildlife. Vibratory pile installation shall be conducted in accordance with the USACE's "*Proposed Additional Procedures and Criteria for Permitting Projects Under a Programmatic Determination of Not Likely to Adversely Affect Select Listed Species in*

California.[6]" Use of the vibratory pile driver would keep underwater sound pressure levels well below the established regulatory levels to protect fish.

d. Piles shall be driven at low tides as often as practicable to reduce noise or other direct impacts on fish and to reduce turbidity that might indirectly affect them.

3. Special-Status Bird Species Protection Measures

a. The project proponent and its contractors shall retain a qualified wildlife biologist and conduct surveys for Ridgway's rail, other special-status, and migratory birds prior to initiation of construction activities. These surveys are required for construction activities conducted during nesting season.

b. If Ridgway's rail or other special-status or migratory bird species are detected in the Project site during surveys, the project proponent shall consult USFWS and/or CDFW staff to develop appropriate avoidance measures in addition to those listed here. The project proponent shall be responsible to ensure that USFWS and/or CDFW requirements are implemented.

c. If a Ridgway's rail is detected within 500 feet of the Project site during their nesting season (February 1 – August 31), all construction activities within 500 feet of suitable nesting or forage habitat for this species will be delayed until approved by USFWS and/or CDFW.

d. If a Ridgway's is detected within 500 feet of the Project site during the non-nesting season (September 1 – January 31), construction activities can commence, but all vegetation shall be cleared by hand or with hand tools and a biologist will be retained on site during vegetation clearing activities to ensure that no birds are injured. Once the construction site is devoid of vegetation regular construction can commence.

e. If an active nest of any other bird species is discovered in the Project site during surveys, a no-disturbance buffer zone nest shall be established. The no-disturbance zone shall be marked with flagging or fencing that is easily identified by the construction crew and shall not affect the nesting bird. Buffer widths will be confirmed or adjusted in discussion with USFWS and/or CDFW. Buffers shall remain in place as long as the nest is active or young remain in the area and are dependent on the nest.

f. If any birds or raptors initiate nests within the established buffer distances while construction is happening, then it is assumed that they are habituated to the construction activities, and construction can continue as long as the birds or their nests are not physically harmed.

4. Salt Marsh Harvest Mouse Protection Measures

a. Construction activities, including site preparation, shall avoid suitable salt marsh harvest mouse habitat especially during this species' breeding season (March 1 to November 30, per the RWF Master Plan EIR's Mitigation Measure Bio-2c: Salt marsh harvest mouse and salt marsh wandering shrew measures). As work during the species' breeding seasons

[6] U.S. Army Corps of Engineers. 2013. Proposed Additional Procedures and Criteria for Permitting Projects Under a Programmatic Determination of Not Likely to Adversely Affect Select Listed Species in California (the 2013 NLAA Program). August 13, 2013.

will likely be necessary, avoidance and minimization measures shall be developed in consultation with USFWS and/or CDFW, and then implemented.

b. Measures shall include, but not be limited to, the following:

i. Prior to initiation of work in suitable habitat, an agency-approved[7] biologist shall be retained to conduct preconstruction surveys areas where disturbance is planned. Surveys shall take place no more than 24 hours before the onset of vegetation removal or ground-disturbing activities.

ii. Prior to construction, a silt exclusion fencing with wire-mesh backing shall be installed by hand along the northern boundary of Artesian Marsh across the Pond A18 levee; and along the southern and eastern boundary of the Artesian Slough tidal marsh extending 250 feet north and south from the Project footprint, to prevent salt marsh harvest mice from entering the active work area; to protect habitat within the marsh from earthmoving activities or accidental spills, and to exclude workers from the marsh.

iii. An agency-approved biologist shall supervise the hand removal of any vegetation, including patches of pickleweed habitat detected to avoid impacts on salt marsh harvest mouse.

iv. If salt marsh harvest mouse individuals are observed in or near the Project work area, all construction activities shall cease until the USFWS and/or CDFW can be contacted and appropriate avoidance, protection, or relocation measures can be developed, approved, and implemented. Depending the specific location and agency guidance, these measures may include relocation or buffer distances.

5. Western Pond Turtle Protection Measures

a. Prior to the start of construction activities, the project proponent shall retain a qualified biologist to conduct preconstruction surveys for pond turtles in all suitable habitats (aquatic and upland) in the vicinity of the work site. Surveys shall take place no more than 72 hours prior to the onset of site preparation and construction activities with the potential to disturb turtles or their habitat.

b. If preconstruction surveys identify active western pond turtle nests within the Project site, the biologist shall establish no-disturbance buffer zones around each nest using temporary construction fencing. The demarcation shall be permeable to allow young turtles to move away from the nest following hatching. The radius of the buffer zone and the duration of exclusion shall be determined in consultation with the CDFW. The buffer zones and fencing shall remain in place until the young have left the nest, as determined by the qualified biologist.

c. A qualified biologist shall monitor construction activities in the vicinity of suitable habitat within which western pond turtle is found (either during the survey or observed during construction), and remove and relocate western pond turtles in proposed

[7] The “agency”-approved biologist would be approved by USFWS and CDFW, the federal and state regulatory agencies responsible for implementing endangered species acts, and/or state regulations applicable to Fully-Protected Species.

construction areas to suitable habitat outside the project limits, consistent with CDFW protocols and handling permits. Relocation sites shall be subject to CDFW approval.

d. If any turtles are found in the Project site, construction activities shall halt within 50 feet and the qualified biologist shall be notified. If the biologist determines the turtle is a western pond turtle, the turtle shall be relocated into nearby suitable habitat consistent with CDFW protocols and handling permits.

4.0 Environmental Baseline

Natural communities are assemblages of plant species that occur together in the same area and are defined by species composition and relative abundance. The natural communities classification presented herein is based on field observations and CDFW's standard "Preliminary Descriptions of the Terrestrial Natural Communities of California."[8] Plant communities generally correlate with wildlife habitat types. No rare natural communities identified in the nine quadrangles occur within or adjacent to the study area. Open water, tidal freshwater marsh, non-tidal freshwater marsh, and bareground/peripheral halophyte zone are the dominant vegetation communities found within the study area. Although no rare plants are expected to occur in the study area, a small area of tidal freshwater marsh would be lost during Project implementation. Therefore, much of the following discussion focuses on special-status fish and wildlife species and other protected habitats.

4.1 Reconnaissance-Level Survey

ESA biologists Chris Rogers and Liz Hill surveyed the study area on February 23, 2017 to identify the potential presence and distribution of common and special-status plant and wildlife species, jurisdictional waters and wetlands, and sensitive natural communities. Weather during the survey was clear with a light breeze and the temperature was 48 to 52 degrees Fahrenheit. Vegetation identified during the survey is identified in the habitat descriptions below. Incidental wildlife sightings during the survey include:

- great blue heron (*Ardea herodias*)
- red-tailed hawk (*Buteo jamaicensis*)
- killdeer (*Charadrius vociferous*)
- common raven (*Corvus corax*)
- Canada goose (*Branta canadensis*)
- song sparrow (*Melospiza melodia*)
- black phoebe (*Sayornis nigricans*)
- American coot (*Fulica americana*)
- California gull (*Larus californicus*)
- double-crested cormorant (*Phalacrocorax auritus*)
- mallard (*Anas platyrhynchos*)
- black-crowned night heron (*Nycticorax nycticorax*)
- bank swallow (*Riparia riparia*)
- red-winged blackbird (*Agelaius phoeniceus*)

4.2 Open Water

Pond A18 is open water habitat separated from tidal flows of the San Francisco Bay by a levee system and two tide gates, one to the north and one to the south. Pond A18, originally created for salt production and harvesting, is currently inactive as a salt pond; however, the pond is still managed in order to achieve specific salinity and hydrologic circulation regimes.[9] Salinity data indicate that the range of brackish salinities in the pond vary by season, from less than 10 parts per thousand (ppt) in the wet season to 25 ppt in the dry season.[10] Open water in the study area is

[8] Holland, R.F. 1986. *Preliminary Descriptions of the Terrestrial Natural Communities of California*, California Department of Fish and Game, Sacramento, CA.

[9] H.T. Harvey and Associates, 2010. Envision San José 2040 General Plan Update Biological Resources Report. August, 2010.

[10] ESA and Jones and Stokes. San Jose/Santa Clara Water Pollution Control Plant Master Plan Draft EIR. File No. PP11-043, SCH # 2011052074. December 2012

predominantly influenced by tidal Bay water, RWF effluent discharge, direct rainfall, and run-off from surrounding areas; thus, the salt content of the soil results in brackish or saline inundation within these features.

Artesian Slough also contains open water habitat. Artesian Slough is a 2.5-mile long tidal slough that begins at Los Esteros Road and ends at Coyote Creek. The RWF discharges into the upstream end of Artesian Slough and is the sole source of freshwater to the slough. The boundaries of open water in Artesian Slough were determined based on the limit of vegetation at the edge of the adjacent tidal freshwater marsh. As such, open water in this portion of the study area is almost entirely unvegetated. Observations of the slough at extreme low tide confirm that the slough is absent of submerged aquatic vegetation.[11]

Many species of waterfowl use open water habitat. These species include mallard (*Anas platyrhynchos*), American coot (*Fulica americana*), California gull (*Larus californicus*), gadwall (*Anas strepera*), Clark's grebe (*Aechmorphorus clarkii*), pied-billed grebe (*Podilymbus podiceps*), northern shoveler (*Anas clypeata*), double-crested cormorant (*Phalacrocorax auritus*), California brown pelican (*Pelecanus occidentalis californicus*), and Canada goose (*Branta canadensis*). Aquatic species including Pacific lamprey (*Entosphenus tridentata*), CV fall-run Chinook salmon (*Oncorhynchus tshawytscha*), CCC steelhead (*Oncorhynchus mykiss*), California roach (*Hesperoleucus symmetricus*), Sacramento sucker (*Catostomus occidentalis*), sculpins (*Cottus* sp.), mosquitofish (*Gambusia affinis*), bluegill (*Lepomis macrochirus*), and inland silverside (*Menidia beryllina*) are known to occur in the tidal waters of the study area.[12]

4.3 Tidal Freshwater Marsh

Tidal freshwater marsh is found along the eastern boundary of Artesian Slough. Artesian Slough includes portions of the west levee bank, north and south of the Pond A18 south gate structure. Tidal freshwater marsh refers to areas only intermittently or sporadically exposed to tidal influence. The freshwater flow from the RWF combined with the very low levels of salinity influenced from the San Francisco Bay, make this habitat type tolerable to typically freshwater emergent plant species. Dominant species in this habitat type include California bulrush (*Schoenoplectus californicus*), cattail (*Typha* sp.), western goldenrod (*Euthamia occidentalis*), wild radish (*Raphanus raphanistrum*), pickleweed (*Salicornia pacifica*), and perennial pepperweed (*Lepidium latifolium*).

Wildlife species found in this habitat include saltmarsh harvest mouse (*Reithrodontomys raviventris*), western pond turtle (*Actinemys marmorata*), Ridgway's rail (*Rallus obsoletus*), California least tern (*Sterna antillarum browni*), American coot, mallard, great egret (*Ardea alba*), black-crowned night heron, great blue heron, black-necked stilt (*Himantopus mexicanus*), saltmarsh common yellowthroat (*Geothlypis trichas sinuosa*), Alameda song sparrow (*Melospiza melodia pusillula*), song sparrow, black phoebe, western snowy plover (*Charadrius alexandrinus*

[11] Frueh, Bryan, 2017. San Jose-Santa Clara Regional Wastewater Facility Biologist. Pond A18 Southern Structure Low Tide Photos for Vegetation Assessment.

[12] ESA and Jones and Stokes. San Jose/Santa Clara Water Pollution Control Plant Master Plan Draft EIR. File No. PP11-043, SCH # 2011052074. December 2012

nivosus), least Bell's vireo (*Vireo bellii pusillus*), bank swallow, tricolored blackbird (*Agelaius tricolor*), and red-winged blackbird.

4.4 Non-tidal Freshwater Marsh

Non-tidal freshwater marsh occurs in Artesian Marsh, in the southern portion of the study area. Non-tidal salt marsh occurs higher in the marsh than tidal salt marsh and is not frequently inundated by tidal water. This community would not be directly impacted by Project-related activities but wildlife in it may be temporarily disturbed by noise and human presence. Dominant plant species commonly found in this habitat include pickleweed, alkali heath (*Frankenia salina*), and saltgrass (*Distichlis spicata*). Other species observed in non-tidal salt marsh habitat include perennial pepperweed, five horn bassia (*Bassia hysssopifolia*), dodder (*Cuscuta salina*), ripgut brome (*Bromus diandrus*) and soft brome (*Bromus hordeaceus*).

Wildlife species that use non-tidal salt marsh are the same as those that are expected to be found in upper, more stable portions of tidal salt marsh because of the similarity of physical habitat characteristics. These species include fossorial mammals (e.g., California ground squirrel (*Otospermophilus beecheyi*), California vole (*Microtus californicus*), salt-marsh harvest mouse) and their predators (e.g., red fox (*Vulpes vulpes*), coyote (*Canis latrans*), turkey vulture (*Cathartes aura*), western burrowing owl (*Athene cunicularia*), American kestrel, and red-tailed hawk), various species of shorebirds and wading birds (e.g., killdeer (*Charadrius vociferus*), great egret, great blue heron), song sparrow, and western fence lizard.

4.5 Bareground/Peripheral Halophyte Zone

This habitat type is found on top of the levee and bank of Pond A18. This area consists predominantly of bareground and scattered halophytic (saline-tolerant) species such as pickleweed, alkali heath, and saltgrass. Other plants in this community include alkali mallow (*Malvella leprosa*), black mustard (*Brassica nigra*), and bull mallow (*Malva nicaeensis*), Bermudagrass (*Cynodon dactylon*), five-horn bassia, and annual barleys (*Hordeum murinum, and H. marinum* subsp. *gussoneanum*). The amount of bareground/peripheral halophyte zone habitat fluctuates depending on water levels in Pond A18. This community is subject to RWF maintenance activities, such as mowing and compaction from vehicles. Hydrology of this upland community consists of direct precipitation and infiltration, with limited short duration ponding small depressions in some years. The land surface is relatively level on the top of the levee, so surface runoff is minimal. Because the dominant vegetation does not possess strong wetland indicators, this feature is considered non-jurisdictional.

Wildlife species common to or observed within the bareground/peripheral halophyte zone include black skimmer (*Rynchops niger*), snowy egret, lesser goldfinch (*Spinus psaltia*), great egret, American white pelican (*Pelecanus erythrorhynchos*), song sparrow, mallard, gull (*Larus* spp.), double-crested cormorant, American avocet (*Recurvirostra americana*), Brandt's cormorant (*Phalacrocorax penicillatus*), American crow (*Corvus brachyrhynchos*), and other songbirds, in addition to western fence lizard (*Sceloporus occidentalis*).

4.6 Waters of the U.S./Waters of the State

ESA biologists conducted a preliminary draft wetland delineation[13] for the Project on February 23, 2017, to identify jurisdictional limits of regulated wetlands and other waters of the U.S. and of the State in the vicinity of the proposed Project site. Potentially jurisdictional features within the study area that could be affected by the project include freshwater tidal marsh (tidal), open water (tidal), managed pond (muted-tidal). Both Artesian Slough and Pond A18 are navigable waters with a hydrologic connection to the Bay, which also is a traditional navigable water.

Waters of the U.S. and state within the study area, Artesian Slough and Pond A18, are connected to traditional navigable waters, such as San Francisco Bay, either by hydrological connection or through tide gates. These features are considered jurisdictional under Sections 404 and 401 of the CWA, Porter-Cologne Water Quality Control Act, and Section 10 of the Rivers and Harbors Act. Tidal freshwater marsh in the study area is located adjacent to traditional navigable waters, and is therefore also considered to be federally and state jurisdictional. This vegetation community performs water filtration and sediment capture functions. Therefore, the biological, chemical and physical processes being performed by the tidal freshwater marsh is of functional importance to Artesian Slough. Potential waters of the U.S. and state within the project site are shown in Figure 4, where waters of the U.S. are the purple shaded areas indicating proposed fill below the 9-foot elevation HTL contour and waters of the state are the brown shaded areas indicating fill below the top of the levee bank.

4.7 Migratory Birds and Raptors

The Migratory Bird Treaty Act and California Fish and Game Code protect raptors, most native migratory birds, and resident breeding birds that may migrate through and/or nest in the study area. Migratory and resident birds which breed locally in South San Francisco Bay have the potential to nest in vegetation observed within the study area. Several waterbirds were observed foraging and resting in the Artesian Slough portion of the study area, including great blue heron, American coot, red-tailed hawk, California gull, killdeer, double-crested cormorant, common raven, mallard, Canada goose, black-crowned night heron, song sparrow, bank swallow, black phoebe, red-winged blackbird. During breeding season (February 1 through August 31), birds may nest within the Project site could be adversely affected by Project construction.

4.8 Wildlife Movement Corridors

The Project site is along the southern shoreline of San Francisco Bay and is located within the Pacific Flyway. The study area provides valuable stopover habitat for migratory birds. Open space creates potential bird habitat, and birds using open space areas within the study area may be exposed to an increased risk of noise, vibrations, and increased activity levels associated with vegetation grubbing, earth moving, pile driving, and heavy equipment operation. However, project impacts are not likely to adversely affect wildlife movement corridors because of the

[13] ESA, 2017. San José – Santa Clara Regional Wastewater Facility, Pond A18 South Gate Levee Repair. Preliminary Delineation of Waters of the United States, Santa Clara County, California. April, 2017.

small footprint relative to adjacent and similar habitat, and because of the short duration of the project's construction activities.

5.0 USFWS-listed Species

The USFWS, has jurisdiction over plants, wildlife, and some fish, and with the NMFS oversees implementation of the FESA. Section 7 of the FESA mandates that all federal agencies consult with the USFWS to ensure that their actions do not jeopardize the continued existence of a listed species or destroy or adversely modify critical habitat for listed species. A federal agency is required to consult with USFWS if it determines that the construction or operation of the proposed project "may affect" federally listed species or designated critical habitat. The FESA prohibits the "take"[14] of any fish or wildlife species listed as threatened or endangered, including the destruction of habitat that could hinder species recovery.

5.1 USFWS Aquatic Species

Species accounts for USFWS-protected aquatic species with a moderate to high potential to occur in the study area are summarized below.

Longfin smelt (*Spirinchus thaleichthys*) **–** candidate for federal listing; state listed threatened species

Longfin smelt is a small, slender-bodied pelagic fish that measures about 3 inches in length as an adult. The species generally lives for two years although some three-year smelt have been observed. Those that survive to the planktonic larval stage are transported into the western Delta and Suisun Bay during the late winter and spring where juveniles rear. Longfin smelt reside as juveniles and pre-spawning adults in the more saline habitats within San Pablo Bay and Central Bay during a majority of their life.[15] Movement patterns based on catches in CDFW fishery sampling suggest that longfin smelt actively avoid water temperatures greater than 20° C.[16] These conditions occur within the Delta during the summer and early fall, when longfin smelt inhabit more marine waters further downstream in the bays and are not present within the Delta. Longfin smelt have been recorded in low numbers in recent years in portions of South San Francisco in the study area.[17] Longfin smelt are generally rare in Artesian Slough; however, they have been observed at the mid and far downstream points of the slough (nearest location is approximately ¾-mile north of Project site) and more frequently out into Lower Coyote Creek and Pond A19.[18] As such, they have a low potential to occur within the Project site.

[14] "Take," as defined in Section 9 of the FESA, is broadly defined to include intentional or accidental "harassment" or "harm" to wildlife. "Harass" is further defined by the U.S. Fish and Wildlife Service as an intentional or negligent act or omission that creates the likelihood of injury to wildlife by annoying it to such an extent as to significantly disrupt normal behavioral patterns that include, but are not limited to, breeding, feeding, and sheltering. "Harm" is defined as an act that actually kills or injures wildlife. This may include significant habitat modification or degradation that actually kills or injures wildlife by significantly impairing essential behavioral patterns, including breeding, feeding, or sheltering.

[15] Moyle, P.B. 2002. Inland Fishes of California, University of California Press, Berkeley and Los Angeles, CA.

[16] Ibid.

[17] IEP for the San Francisco Bay Estuary; San Francisco Bay Study. 2010-2014. Unpublished Raw Mid-water and Otter Trawl Data.

[18] Erwin, J. 2017. Longfin smelt presence in Artesian Slough. Email correspondence from James Erwin to Ken Davies, City of San José - Environmental Services Department. May 23, 2016 12:35 PM.

5.1.1 Effects on Aquatic Species

In general, direct effects are those which physically contact the species being analyzed, such as physical damage to an individual as in the case of barotraumas, entrainment, or the complete physical loss of a spawning or foraging habitat, a blocked migration corridor, or harassment of an animal species to the point where it abandons part of its normal range. Indirect effects would include ecosystem type changes that would primarily affect food web dynamics as would occur with decreased suitability of foraging habitat, temporary noise or physical disturbance that results in avoidance behavior, and the reduced food-web value of foraging habitat as the result of the introduction of non-native invasive species.

For species that utilize the aquatic environment of the study area, potential direct and indirect effects from the proposed action are discussed by type of ecological effect expected (e.g., noise, sediment effects), as all aquatic species considered within this document share the same habitat.

Underwater Noise

The proposed pile driving would consist of using a vibratory hammer to install four rows of sheet piles, with each row being roughly 30-55 feet long. Each sheet pile would be approximately 28 to 35 inches wide and driven downward until its top end was approximately at the top of the levee surface elevation. While the sheet pile would be installed with a vibratory pile driver, both vibratory and impact hammers produce sound waves that can be perceived and are potentially harmful for fish. Hydrostatic pressure waves and vibration generated by pile driving can adversely affect all life stages of fish. Hydrostatic pressure waves have the potential to rupture the swim bladders and other internal organs of all life stages of fish, and could permanently injure their inner ears and lateral line organs.[19] These injuries could reduce the ability of fish to orient in the water column, capture prey, and reduce the ability of fish to avoid predators.[20]

An interagency working group, including members from NMFS and USFWS, has established interim criteria for evaluating underwater noise impacts from pile driving on fish.[21] This working group identified a peak sound pressure level of 206 decibels (dB) and an accumulated sound exposure level (SEL)[22] of 187 dB as thresholds for injury to fish. For fish weighing less than 2 grams, the accumulated SEL threshold is reduced to 183 dB. Although there has been no formal

[19] Hastings and Popper. 2005. Effects of Sound on Fish. (J&S 43A0139). Prepared for the California Department of Transportation. Sacramento, Ca.

[20] California Department of Transportation (CalTrans). 2015. Technical Guidance for Assessment and Mitigation of the Hydroacoustic Effects of Pile Driving on Fish. November 2015.

[21] Fisheries Hydroacoustic Workgroup. 2008. Agreement in Principal for Interim Criteria for Injury to Fish from Pile Driving Activities. NMFS NW & SW Regions, USFWS Regions 1 and 8, Cal/Wash/Ore Depts of Transportation, CDFG, and USFHA. Memorandum to Applicable Agency Staff. June 12.

[22] Sound exposure level (SEL) is defined as the constant sound level acting for 1 second, which has the same amount of acoustic energy as the original sound. Expressed another way, the sound exposure level is a measure of the sound energy in a single pile driver strike. Accumulated SEL ($SEL_{accumulated}$) is the cumulative SEL resulting from successive pile strikes. $SEL_{accumulated}$ is based on the number of pile strikes and the SEL per strike; the assumption is made that all pile strikes are of the same SEL.

agreement on a "behavioral" threshold, NMFS uses 150 dB as the threshold for adverse behavioral effects.[23]

Based on empirical data from actual construction sites, peak sound pressures from installing a sheet pile cofferdam with a vibratory driver are estimated to be below thresholds for injury and/or mortality:

Sheet piles installed with vibratory driver[24]:

- Peak[25] = 175 (typical) - 182 (loudest) dB
- SEL = 160-165 dB

Estimated pressures are above thresholds for behavioral effects (150dB threshold), however, behavioral effects are not expected to be an issue due to timing restrictions (seasonal work window). Furthermore, because of the timing of in-water construction (NMFS-approved seasonal work window), most special-status fish are not present in the areas affected by elevated sound levels from pile driving activities. For most species with migratory life stages that have the potential to be present, only a small portion of the population is expected to be exposed to the increased underwater sound levels because these increases generally would occur outside of peak migration periods.

Based on a review of the construction techniques (e.g., use of vibratory hammers and in-water work window), NMFS threshold criteria for harm and injury, and empirical data from actual construction sites, underwater sound effects are not likely to adversely affect fish species. In addition, implementation of Avoidance and Minimization Measure 2 would, in the unlikely event that special-status fish or other aquatic species are present during pile driving activity, minimize impacts on these species.

Water and Sediment Quality Impairment

Installation of a sheet piles has the potential to result in the short-term, temporary disturbance and resuspension of benthic sediments. Sediment resuspension has the potential to increase the exposure of potential harmful chemicals, in particular methylmercury, sequestered in the sediment to aquatic receptors in the immediate area, and result in adverse water quality and biological effects.[26] Suspended sediments in the water column can lower levels of dissolved oxygen, increase concentrations of suspended solids, and possibly release chemicals present in the sediments into the water column. However, increased turbidity levels would be relatively short-lived and generally confined to within a few hundred feet of the activity. After initially high

[23] CalTrans. 2015. Technical Guidance for Assessment and Mitigation of the Hydroacoustic Effects of Pile Driving on Fish. November 2015.
[24] CalTrans. 2007. Compendium of Pile Driving Data. Table 1.2-2 from compendium dataset.
[25] Peak sound pressure refers to the highest absolute value of a measured waveform (i.e., sound pressure pulse as a function of time).
[26] Tetra Tech, Inc. and Wetlands and Water Resources, Inc. 2013. *Suisun Marsh Conceptual Model/Impairment Assessment Report for Organic Enrichment, Dissolved Oxygen, Mercury, Salinity, and Nutrients*. 2013.

turbidity levels, sediments would disperse and deposit, and background levels would be expected to be restored within hours of disturbance.

5.2 USFWS Terrestrial Species

Species accounts for USFWS-listed terrestrial species with a moderate to high potential to occur in the study area are summarized below.

Ridgway's rail (*Rallus obsoletus*) **–** federal and state listed endangered species

Ridgway's rail (formerly California clapper rail) ranges along the Pacific Coast in Monterey and San Luis Obispo Counties and inhabits tidal mudflats and sloughs. There are numerous CNDDB records of this species north of the Project site at the confluence of Artesian Slough and Coyote Creek, and Coyote Creek and Alviso Slough. The complex vegetative structure and channel networks of the tidal marshes in the region provide excellent habitat for Ridgway's rails. Optimal habitat for Ridgway's rail comprises tidal salt marsh with direct tidal circulation, an intricate network of tidal sloughs, pickleweed with cordgrass, gumplant, and other high-marsh plants, and abundant and dense high-marsh vegetation for cover during high tides.[27] Brackish marshes are generally not considered to be suitable habitat. Although the freshwater influence found in the Project site may not provide high quality habitat, Ridgway's rail could be present downstream of the Project site in Artesian Slough where tidal action is more dominant and salinity levels are higher. Less likely but still possible, this species could forage in the marsh vegetation on the Artesian Slough side of the levee in the Project site. There are records of this species occurring northeast of the Project site in the Alviso pond complex; however, the most recent of those shown in the CNDDB is from an observation made in 1975.[28] More recent surveys by the biological staff of the Don Edwards San Francisco Bay National Wildlife Refuge have detected Ridgway's rail presence in the restored tidal marsh habitat in Pond A21, directly north of the Project site.[29]

Salt marsh harvest mouse (*Reithrodontomys raviventris*) – federal and state listed endangered species

Salt marsh harvest mouse inhabits salt marsh habitat vegetated with pickleweed around the greater San Francisco Bay. There are records of this species occurring less than 1.5 miles north of the Project site in 1990;[30] however, there are substantial barriers to dispersal from those areas into the Project site, and the actual habitat on site is patchy and of very low quality. Thus, salt marsh harvest mouse has potential to occur in the salt marsh habitat in the southwestern portions of the Project site, but is very unlikely to be present.

---

27 Albertson, J. and J. Evans. 2000. California Clapper Rail. pp. 332-340 In: Goals Project, 2000. Bayland Ecosystem Species and Community Profiles: Life histories and environmental requirements of key plants, fish and wildlife. Prepared by the San Francisco Bay Area Wetlands Ecosystems Goals Project. P.R. Olofson, editor. San Francisco Bay Regional Water Quality Control Board, Oakland, California.

28 CDFW, 2017. CNDDB. Federal Endangered and Threatened Species that May Be Affected by Projects in the Milpitas, Mountain View, Calaveras Reservoir, Newark, Niles, La Costa Valley, Cupertino, San Jose East, and San Jose West, California, U.S. Geological Survey 7.5-minute topographic quadrangles. *Rarefind 5*. Accessed April 10, 2017.

29 South Bay Salt Pond Restoration Project. 2014. Annual Report. Available at http://www.southbayrestoration.org/documents/technical/SBSPR_2014AR_WebReady.pdf. Accessed July 2017.

30 Ibid.

5.2.1 Effects on Terrestrial Species

As the terrestrial species occupy many different habitats within the study area, potential direct and indirect effects from the proposed action are discussed by the effect on each respective taxonomic group (e.g., birds, mammals).

Effects on Birds

Effects on special status, and resident and migratory species could occur during Project construction, and during breeding seasons in particular. Effects related to Project implementation during the non-breeding season are not likely to adversely affect special-status bird species, as a birds' mobility and ability to access other high-quality foraging and nesting habitat in the region limit the potential for direct effects. However, Project construction would render the site temporarily unsuitable for birds due to the noise, vibrations, and increased activity levels associated with vegetation grubbing, earth moving, pile driving, and heavy equipment operation. These activities could subject birds to risk of death or injury, however, they are likely to avoid using the area during Project construction. Avoidance, in turn, could cause hunger or stress among individual birds by displacing them into adjacent territories.

Construction impacts during the breeding season, however, would have potential to adversely affect nesting birds due to the potential to result in "take," or loss, of a nest; disturbances during the nesting season can cause reduced incubation, reduced foraging by adults, reduced feeding of chicks, nest predation, nest abandonment, and other forms of nest failure. Avoidance and Minimization Measure 3: Special-status Bird Protection Measures would reduce adverse effects to Ridgway's rail by requiring preconstruction surveys, and implementing avoidance measures if active nests are located.

Effects on Mammals

No salt marsh vegetation suitable for use by salt marsh harvest mouse is present in the study area. Therefore, there would be no direct effects to, or loss of, salt marsh harvest mouse habitat. However, marginally suitable habitat for salt-marsh harvest mouse occurs in the non-tidal portion of Artesian Marsh located south of the Project site. Since no construction activities are proposed in Artesian Marsh, no salt marsh harvest mouse habitat would directly be affected by the Project.

Impacts of construction noise and vibration on salt-marsh harvest mice individuals present in the project vicinity are unknown, but if present, mice could be temporarily subject to increased stress during construction since their ability to avoid the noise and vibrations associated with Project construction would be constrained by site conditions. Project construction activities may result in harm or harassment of salt marsh harvest mouse individuals, which would be likely to adversely affect the species. Avoidance and Minimization Measure 4: Salt Marsh Harvest Mouse Protection Measures would reduce adverse effects on this species by implementing avoidance and minimization measures, conducting preconstruction surveys, and installing exclusion fencing.

6.0 NMFS-listed Species

The National Marine Fisheries Service (NMFS), has jurisdiction over anadromous fish, marine fish, and mammals, and along with the USFWS, oversees implementation of the Federal Endangered Species Act (FESA). Section 7 of the FESA mandates that all federal agencies consult with the NMFS to ensure that their actions do not jeopardize the continued existence of a listed species or destroy or adversely modify critical habitat for listed species. A federal agency is required to consult with NMFS if it determines that the construction or operation of the proposed project "may affect" federally listed species or designated critical habitat. The FESA prohibits the "take"[31] of any fish or wildlife species listed as threatened or endangered, including the destruction of habitat that could hinder species recovery.

The Sustainable Fisheries Act of 1996 amended the MSA to establish new requirements for EFH descriptions in Federal Fisheries Management Plans and to require Federal agencies to consult with NMFS on activities that may adversely affect EFH. The Artesian Slough side of project site is on the margin of three types of EFH for commercially important fish and sharks managed under three federal fisheries management plans (FMPs):[32]

- Pacific Salmon FMP: The Pacific Salmon FMP is designed to protect habitat for commercially important salmonid species. Chinook salmon is the only one of these species that may be seasonally present in the Study Area, although historically Coho salmon were once common in San Francisco Bay.

- Pacific Groundfish FMP: The Pacific Groundfish FMP is designed to protect habitat for more than 90 species of fish, including rockfish, flatfish, roundfish, some sharks and skates, and other species that associate with the underwater substrate. Those reported in recent years as present in south San Francisco Bay waters include English sole, sand sole, curlfin sole, Pacific sanddab, starry flounder, lingcod, brown rockfish, spiny dogfish, and leopard shark.

- Coastal Pelagic FMP: The Coastal Pelagic FMP is designed to protect habitat for a variety of fish species that are associated with open coastal waters. Fish managed under this plan include planktivores and their predators. Those found in south San Francisco Bay include Northern anchovy, Pacific sardine, jacksmelt and jack mackerel.

The project was analyzed for potential effects on these FMPs.

[31] "Take," as defined in Section 9 of the FESA, is broadly defined to include intentional or accidental "harassment" or "harm" to wildlife. "Harass" is further defined by the U.S. Fish and Wildlife Service as an intentional or negligent act or omission that creates the likelihood of injury to wildlife by annoying it to such an extent as to significantly disrupt normal behavioral patterns that include, but are not limited to, breeding, feeding, and sheltering. "Harm" is defined as an act that actually kills or injures wildlife. This may include significant habitat modification or degradation that actually kills or injures wildlife by significantly impairing essential behavioral patterns, including breeding, feeding, or sheltering.

[32] NOAA Fisheries. 2017. Essential Fish Habitat Mapper v. 3.0. Accessed August 4, 2017. Available at: http://www.habitat.noaa.gov/protection/efh/habitatmapper.html.

6.1 NMFS Species

Species accounts for NMFS-listed species or species with designated EFH within the study area with a moderate to high potential to occur in the study area are summarized below.

Green sturgeon (*Acipenser medirostris*) southern DPS - federal listed threatened species; state species of special concern

The most widely distributed member of the sturgeon family and the most marine-oriented, green sturgeon enter rivers only to spawn. Juveniles rear in fresh water for as long as 2 years before migrating to sea. Green sturgeon are thought to spawn every 3 to 5 years in deep pools with high velocity and turbulent water and prefer cobble substrates but can use substrates ranging from clean sand to bedrock. Females produce 60,000 to 140,000 eggs that are broadcast to settle into the spaces in between cobbles. Adult green sturgeon migrate into freshwater beginning in late February with spawning occurring in the Sacramento River in late spring and early summer (March through July), with peak activity in April and June. After spawning, juveniles remain in fresh and estuarine waters for one to four years and then begin to migrate out to the sea.[33] The upper Sacramento River has been identified as the only known spawning habitat for green sturgeon in the southern DPS.[34]

According to recent studies, green sturgeon adults begin moving upstream through the Bay during the winter.[35] Adults in the San Joaquin Delta are reported to feed on benthic invertebrates including shrimp, amphipods and occasionally small fish while juveniles have been reported to feed on opossum shrimp and amphipods.[36] Within the bays and estuaries, sufficient water flow is required to allow adults to successfully orient to the incoming flow and migrate upstream to spawning grounds. Subadult and adult green sturgeon occupy a diversity of depths within bays and estuaries for feeding and migration. Tagged adults and subadults within the San Francisco Bay-Delta have been observed occupying waters over shallow depths of less than 33 feet, either swimming near the surface or foraging along the bottom. Though the presence of green sturgeon cannot be wholly discounted, green sturgeon are unlikely to occur in the project area because they rarely utilize habitat this far south in San Francisco Bay. In recent years, the interagency Ecological Program's (IEP) midwater and bottom trawl surveys have failed to record a single individual at any of their South Bay monitoring stations.[37]

Central California Coast steelhead DPS (*Oncorhynchus mykiss*) – federal listed threatened species

[33] Moyle, P. B., R. M. Yoshiyama, J. E. Williams, and E. D. Wikramanayake, 1995. Fish Species of Special Concern in California. Second edition. Final report to California Department of Fish and Game, contract 2128IF.
[34] Moyle, P.B. 2002. Inland Fishes of California, University of California Press, Berkeley and Los Angeles, CA.
[35] Kelly, J. T., A. P. Klimley, and C. E. Crocker, 2003. Movements of adult and sub-adult green sturgeon in the San Francisco Estuary. San Francisco Bay Delta Estuary, 6th Biennial State of the Estuary Conference, Poster, Abstract.
[36] Moyle, P. B., R. M. Yoshiyama, J. E. Williams, and E. D. Wikramanayake, 1995. Fish Species of Special Concern in California. Second edition. Final report to California Department of Fish and Game, contract 2128IF.
[37] Interagency Ecological Program for the San Francisco Bay Estuary (IEP); San Francisco Bay Study. 2010-2014. Unpublished Raw Mid-water and Otter Trawl Data.

Central California Coast (CCC) steelhead are anadromous fish that live in the Pacific Ocean, where they feed until sexually mature. This species migrates into freshwater streams and moves upstream until it spawns in cold, clear water and gravel substrate. CCC steelhead range along California's coast from the Russian River in Marin County, south to Aptos Creek in Santa Cruz County, and includes all of the greater San Francisco Bay, east to the confluence of the San Joaquin and Sacramento Rivers. While historically abundant, Southern San Francisco Bay does not currently support a large steelhead population, however they do continue to persist in small numbers within the Coyote Creek and Guadalupe River watersheds.[38]

Juvenile steelhead emigrate episodically from natal streams during fall, winter, and spring high flows, with peak migration occurring in April and May.[39] Emigrating CCC steelhead use tributaries of San Francisco Bay and portions of the San Francisco Bay for rearing and as a migration corridor to the ocean. Individuals migrating between the ocean and spawning habitat in these streams could stray into Artesian Slough. Although data regarding the timing of steelhead smolts is lacking, smolts in other streams within the DPS including those draining to San Francisco Bay, typically emigrate from March through June.[40]

Central Valley fall-run Chinook salmon ESU (*Oncorhynchus tshawytscha*) **-** California species of special concern

The Central Valley (CV) fall-run ESU represents a population of Chinook salmon that migrate from the ocean to spawning streams in late fall and begin spawning in beds of coarse river gravels typically within October and November, but often continuing into December and January. [41] Populations of fall-run Chinook salmon have suffered the effects of over-fishing by commercial fisheries, degradation of spawning and rearing habitat, added barriers to upstream migration, and reductions in winter flows due to damming. Chinook salmon generally spawn in cool waters providing incubation temperatures no warmer than 19° C. Most stream habitat in South San Francisco Bay lacks the necessary flow regime, habitat availability, and/or water quality to support spawning salmonids. Artesian Slough is a blind slough with no natural freshwater input (the RWF's treated effluent is the only input) and so lacks stream habitat for this species. Additionally, individuals have not been documented in recent years within the study area or the immediate vicinity; and any occurrence would only be temporary as the surrounding bay habitat is primarily utilized as a migration corridor.[42]

6.1.1 Effects on Aquatic Species

In general, direct effects are those which physically contact the species being analyzed, such as physical damage to an individual as in the case of barotraumas, entrainment, or the complete

[38] Smith, J. 2013. Northern Santa Clara County Fish Resources. Department of Biological Sciences, SJSU. July 25, 2013.

[39] Fukushima, L., E.W. Lesh. 1998. Adult and juvenile anadromous salmonid migration timing in California streams. California Department of Fish and Game 84(3): 133-145.

[40] Fukushima, L., E.W. Lesh. 1998. Adult and juvenile anadromous salmonid migration timing in California streams. California Department of Fish and Game 84(3): 133-145.

[41] Yoshiyama, R.M., F.W. Fisher, P.B. Moyle. 1998. Historical Abundance and Decline of Chinook Salmon in the Central Valley Region of California. North American Journal of Fisheries Management. Vol. 18. Iss. 3.

[42] IEP for the San Francisco Bay Estuary; San Francisco Bay Study. 2010-2014. Unpublished Raw Mid-water and Otter Trawl Data.

physical loss of a spawning or foraging habitat, a blocked migration corridor, or harassment of an animal species to the point where it abandons part of its normal range. Indirect effects would include ecosystem type changes that would primarily affect food web dynamics as would occur with decreased suitability of foraging habitat, temporary noise or physical disturbance that results in avoidance behavior, and the reduced food-web value of foraging habitat as the result of the introduction of non-native invasive species.

For species that utilize the aquatic environment of the study area, potential direct and indirect effects from the proposed action are discussed by type of ecological effect expected (e.g., noise, sediment effects), as all aquatic species considered within this document share the same habitat. Additionally, because the entirety of the in-water construction work would occur in areas designated as EFH under the MSA, the effects of the proposed action analyzed in the following sections are discussed as they relate to impacts to such habitat.

Underwater Noise

The proposed pile driving would consist of using a vibratory hammer to install four rows of sheet piles, with each row being roughly 30-55 feet long. Each sheet pile would be approximately 28 to 35 inches wide and driven downward until its top end was approximately at the top of the levee surface elevation. While the sheet piles would be installed with a vibratory pile driver, both vibratory and impact hammers produce sound waves that can be perceived and are potentially harmful for fish. Hydrostatic pressure waves and vibration generated by pile driving can adversely affect all life stages of fish. Hydrostatic pressure waves have the potential to rupture the swim bladders and other internal organs of all life stages of fish, and could permanently injure their inner ears and lateral line organs.[43] These injuries could reduce the ability of fish to orient in the water column, capture prey, and reduce the ability of fish to avoid predators.[44]

An interagency working group, including members from NMFS and USFWS, has established interim criteria for evaluating underwater noise impacts from pile driving on fish.[45] This working group identified a peak sound pressure level of 206 dB and an $SEL_{accumulated}$ of 187 dB as thresholds for injury to fish. For fish weighing less than 2 grams, the accumulated SEL threshold is reduced to 183 dB. Although there has been no formal agreement on a “behavioral” threshold, NMFS uses 150 dB as the threshold for adverse behavioral effects.[46]

Based on empirical data from actual construction sites, peak sound pressures from installing a sheet pile cofferdam with a vibratory driver are estimated to be below thresholds for injury and/or mortality:

---

43 Hastings and Popper. 2005. Effects of Sound on Fish. (J&S 43A0139). Prepared for the California Department of Transportation. Sacramento, Ca.

44 CalTrans. 2015. Technical Guidance for Assessment and Mitigation of the Hydroacoustic Effects of Pile Driving on Fish. November 2015.

45 Fisheries Hydroacoustic Workgroup. 2008. Agreement in Principal for Interim Criteria for Injury to Fish from Pile Driving Activities. NMFS NW & SW Regions, USFWS Regions 1 and 8, Cal/Wash/Ore Depts of Transportation, CDFG, and USFHA. Memorandum to Applicable Agency Staff. June 12.

46 CalTrans. 2015. Technical Guidance for Assessment and Mitigation of the Hydroacoustic Effects of Pile Driving on Fish. November 2015.

Sheet piles installed with vibratory driver:[47]

- Peak[48] = 175 (typical) - 182 (loudest) dB
- SEL = 160-165 dB

Estimated pressures are above thresholds for behavioral effects (150dB threshold), however, behavioral effects are not expected to be an issue due to timing restrictions (seasonal work window). Furthermore, because of the timing of in-water construction (NMFS-approved seasonal work window), most special-status fish are not present in the areas affected by elevated sound levels from pile driving activities. For most species with migratory life stages that have the potential to be present, only a small portion of the population is expected to be exposed to the increased underwater sound levels because these increases generally would occur outside of peak migration periods.

Based on a review of the construction techniques (e.g., use of vibratory hammers and in-water work window), NMFS threshold criteria for harm and injury, and empirical data from actual construction sites, underwater sound effects are not likely to adversely affect fish species. In addition, implementation of Avoidance and Minimization Measure 2 would, in the unlikely event that special-status fish or other aquatic species are present during pile driving activity, reduce adverse effects on these species.

Water and Sediment Quality Impairment

Installation of a sheet piles has the potential to result in the short-term, temporary disturbance and resuspension of benthic sediments. Sediment resuspension has the potential to increase the exposure of potential harmful chemicals, in particular methylmercury, sequestered in the sediment to aquatic receptors in the immediate area, and result in adverse water quality and biological effects.[49] Suspended sediments in the water column can lower levels of dissolved oxygen, increase concentrations of suspended solids, and possibly release chemicals present in the sediments into the water column. However, increased turbidity levels would be relatively short-lived and generally confined to within a few hundred feet of the activity. After initially high turbidity levels, sediments would disperse and deposit, and background levels would be expected to be restored within hours of disturbance.

Alteration of Essential Fish Habitat

Implementation of the proposed Project would result in the net fill of approximately about 500 square feet and 39 cubic yards of rock and sheet pile below the high tide line and thus in aquatic habitat. Almost half of those totals is in the muted tidal Pond A18 itself, which is marginal habitat for special-status fish species. Given the minimal amount of fill required under the proposed Project, this transformation of benthic habitat is not expected to have a negative long-term impact on special status species or the habitat itself. Additionally, without addressing the instability of

47 CalTrans. 2007. Compendium of Pile Driving Data. Table 1.2-2 from compendium dataset.
48 Peak sound pressure refers to the highest absolute value of a measured waveform (i.e., sound pressure pulse as a function of time).
49 Tetra Tech, Inc. and Wetlands and Water Resources, Inc. 2013. *Suisun Marsh Conceptual Model/Impairment Assessment Report for Organic Enrichment, Dissolved Oxygen, Mercury, Salinity, and Nutrients*. 2013.

the South Gate Structure there is the potential for a significantly greater impact to the aquatic environment than is currently expected under the proposed Project. Failure of the structure and surrounding levee would result in impacts to the EFH and critical habitat located in the aquatic portion of the study area, and most-likely require in-water construction work at a level significantly more invasive than that which is currently proposed.

7.0 CDFW-listed Species

Under the CESA, CDFW has the responsibility for maintaining a list of threatened and endangered species (California Fish and Game Code Section 2070). CDFW also maintains a list of "candidate species," which are species formally noticed as being under review for addition to either the list of endangered species or the list of threatened species. In addition, CDFW maintains lists of "species of special concern," which serve as "watch lists." Pursuant to the requirements of the CESA, an agency reviewing a proposed project within its jurisdiction must determine whether any state-listed endangered or threatened species could be present on the project site and determine whether the proposed project could have a potentially significant impact on such species. In addition, CDFW encourages informal consultation on any proposed project that may affect a candidate species.

State listing of plant species began in 1977 with the passage of the California Native Plant Protection Act, which directed CDFW (then the California Department of Fish and Game) to carry out the legislature's intent to "preserve, protect, and enhance endangered plants in this state." However, no special-status plant species are expected to occur within the study area.

7.1 CDFW Aquatic Species

Species accounts for CDFW-listed aquatic species with a moderate to high potential to occur in the study area are summarized below.

Pacific lamprey (*Entosphenus tridentatus*) - California species of special concern

Pacific lamprey is the largest of the native lamprey species with adults commonly reaching over 40 cm in total length. They are anadromous fish, rearing in freshwater streams for approximately 5 to 7 years before migrating to the ocean.[50] During their ocean phase, approximately three years in length, they feed parasitically on fish larger than themselves, consuming the body fluids of a variety of species.

Historically, this species may have been present in Artesian Slough. Currently known from the Guadalupe River, Coyote Creek, and Upper Penitencia Creek, and may be locally common in these areas.[51] Species' status is poorly documented, and abundance in other water bodies in the region is unknown. This species may be present in portions of Artesian Slough during migration between spawning areas and marine foraging habitat. Adults return to freshwater during spawning migrations which typically take place between early March and late June, but can vary greatly depending on the system.[52,53]

50 Moyle, P.B. 2002. Inland Fishes of California, University of California Press, Berkeley and Los Angeles, CA.
51 Leidy, R. A. 2007. Ecology, Assemblage Structure, Distribution, and Status of Fishes in Streams Tributary to the San Francisco Estuary, California. San Francisco Estuary Institute. 194 pp.
52 Moyle, P.B. 2002. Inland Fishes of California, University of California Press, Berkeley and Los Angeles, CA.
53 Entrix. 1996. Results of Fish Passage Monitoring at the Vern Freeman Diversion Facility, Santa Clara River, 1996. Prepared for the United Water Conservation District, Santa Paula, CA. December 26, 1996.

Green sturgeon (*Acipenser medirostris*) southern DPS - federally listed threatened; California species of special concern

The most widely distributed member of the sturgeon family and the most marine-oriented, green sturgeon enter rivers only to spawn. Juveniles rear in fresh water for as long as 2 years before migrating to sea. Green sturgeon are thought to spawn every 3 to 5 years in deep pools with high velocity and turbulent water and prefer cobble substrates but can use substrates ranging from clean sand to bedrock. Females produce 60,000 to 140,000 eggs that are broadcast to settle into the spaces in between cobbles. Adult green sturgeon migrate into freshwater beginning in late February with spawning occurring in the Sacramento River in late spring and early summer (March through July), with peak activity in April and June. After spawning, juveniles remain in fresh and estuarine waters for one to four years and then begin to migrate out to the sea.[54] The upper Sacramento River has been identified as the only known spawning habitat for green sturgeon in the southern DPS.[55]

According to recent studies, green sturgeon adults begin moving upstream through the Bay during the winter.[56] Adults in the San Joaquin Delta are reported to feed on benthic invertebrates including shrimp, amphipods and occasionally small fish while juveniles have been reported to feed on opossum shrimp and amphipods.[57] Within the bays and estuaries, sufficient water flow is required to allow adults to successfully orient to the incoming flow and migrate upstream to spawning grounds. Subadult and adult green sturgeon occupy a diversity of depths within bays and estuaries for feeding and migration. Tagged adults and subadults within the San Francisco Bay-Delta have been observed occupying waters over shallow depths of less than 33 feet, either swimming near the surface or foraging along the bottom. Though the presence of green sturgeon cannot be wholly discounted, green sturgeon are unlikely to occur in the project area because they rarely utilize habitat this far south in San Francisco Bay. In recent years, the IEP midwater and bottom trawl surveys have failed to record a single individual at any of their South Bay monitoring stations.[58]

Longfin smelt (*Spirinchus thaleichthys*) - candidate for federal listing; state listed threatened species

Longfin smelt is a small, slender-bodied pelagic fish that measures about 3 inches in length as an adult. The species generally lives for two years although some three-year smelt have been observed. Those that survive to the planktonic larval stage are transported into the western Delta and Suisun Bay during the late winter and spring where juveniles rear. Longfin smelt reside as

54 Moyle, P. B., R. M. Yoshiyama, J. E. Williams, and E. D. Wikramanayake, 1995. Fish Species of Special Concern in California. Second edition. Final report to California Department of Fish and Game, contract 2128IF.

55 Moyle, P.B. 2002. Inland Fishes of California, University of California Press, Berkeley and Los Angeles, CA.

56 Kelly, J. T., A. P. Klimley, and C. E. Crocker, 2003. Movements of adult and sub-adult green sturgeon in the San Francisco Estuary. San Francisco Bay Delta Estuary, 6th Biennial State of the Estuary Conference, Poster, Abstract.

57 Moyle, P. B., R. M. Yoshiyama, J. E. Williams, and E. D. Wikramanayake, 1995. Fish Species of Special Concern in California. Second edition. Final report to California Department of Fish and Game, contract 2128IF.

58 IEP for the San Francisco Bay Estuary; San Francisco Bay Study. 2010-2014. Unpublished Raw Mid-water and Otter Trawl Data.

juveniles and pre-spawning adults in the more saline habitats within San Pablo Bay and Central Bay during a majority of their life.[59] Movement patterns based on catches in CDFW fishery sampling suggest that longfin smelt actively avoid water temperatures greater than 20° C.[60] These conditions occur within the Delta during the summer and early fall, when longfin smelt inhabit more marine waters further downstream in the bays and are not present within the Delta. Longfin smelt have been recorded in low numbers in recent years in portions of South San Francisco in the study area.[61] Longfin smelt are generally rare in Artesian Slough; however, they have been observed at the mid and far downstream points of the slough (nearest location is approximately ¾-mile north of Project site) and more frequently out into Lower Coyote Creek and Pond A19.[62] As such, they have a low potential to occur within the Project site.

Central Valley fall-run Chinook salmon ESU (*Oncorhynchus tshawytscha*) **-** California species of special concern

The Central Valley (CV) fall-run ESU represents a population of Chinook salmon that migrate from the ocean to spawning streams in late fall and begin spawning in beds of coarse river gravels typically within October and November, but often continuing into December and January. [63] Populations of fall-run Chinook salmon have suffered the effects of over-fishing by commercial fisheries, degradation of spawning and rearing habitat, added barriers to upstream migration, and reductions in winter flows due to damming. Chinook salmon generally spawn in cool waters providing incubation temperatures no warmer than 19° C. Most stream habitat in South San Francisco Bay lacks the necessary flow regime, habitat availability, and/or water quality to support spawning salmonids. Artesian Slough is a blind slough with no natural freshwater input (the RWF's treated effluent is the only input) and so lacks stream habitat for this species. Additionally, individuals have not been documented in recent years within the study area or the immediate vicinity; and any occurrence would only be temporary as the surrounding bay habitat is primarily utilized as a migration corridor.[64]

7.1.1 Effects on Aquatic Species

In general, direct effects are those which physically contact the species being analyzed, such as physical damage to an individual as in the case of barotraumas, entrainment, or the complete physical loss of a spawning or foraging habitat, a blocked migration corridor, or harassment of an animal species to the point where it abandons part of its normal range. Indirect effects would include ecosystem type changes that would primarily affect food web dynamics as would occur with decreased suitability of foraging habitat, temporary noise or physical disturbance that results

59 Moyle, P.B. 2002. Inland Fishes of California, University of California Press, Berkeley and Los Angeles, CA.
60 Ibid.
61 IEP for the San Francisco Bay Estuary; San Francisco Bay Study. 2010-2014. Unpublished Raw Mid-water and Otter Trawl Data.
62 Erwin, J. 2017. Longfin smelt presence in Artesian Slough. Email correspondence from James Erwin to Ken Davies, City of San José - Environmental Services Department. May 23, 2016 12:35 PM.
63 Yoshiyama, R.M., F.W. Fisher, P.B. Moyle. 1998. Historical Abundance and Decline of Chinook Salmon in the Central Valley Region of California. North American Journal of Fisheries Management. Vol. 18. Iss. 3.
64 IEP for the San Francisco Bay Estuary; San Francisco Bay Study. 2010-2014. Unpublished Raw Mid-water and Otter Trawl Data.

in avoidance behavior, and the reduced food-web value of foraging habitat as the result of the introduction of non-native invasive species.

For species that utilize the aquatic environment of the study area, potential direct and indirect effects from the proposed action are discussed by type of ecological effect expected (e.g., noise, sediment effects), as all aquatic species considered within this document share the same habitat.

Underwater Noise

The proposed pile driving would consist of using a vibratory hammer to install four rows of sheet piles, with each row being roughly 30-55 feet long. Each sheet pile would be approximately 28 to 35 inches wide and driven downward until its top end was approximately at the top of the levee surface elevation. While the sheet pile would be installed with a vibratory pile driver, both vibratory and impact hammers produce sound waves that can be perceived and are potentially harmful for fish. Hydrostatic pressure waves and vibration generated by pile driving can adversely affect all life stages of fish. Hydrostatic pressure waves have the potential to rupture the swim bladders and other internal organs of all life stages of fish, and could permanently injure their inner ears and lateral line organs.[65] These injuries could reduce the ability of fish to orient in the water column, capture prey, and reduce the ability of fish to avoid predators.[66]

An interagency working group, including members from NMFS and USFWS, has established interim criteria for evaluating underwater noise impacts from pile driving on fish.[67] This working group identified a peak sound pressure level of 206 dB and an $SEL_{accumulated}$ of 187 dB as thresholds for injury to fish. For fish weighing less than 2 grams, the accumulated SEL threshold is reduced to 183 dB. Although there has been no formal agreement on a “behavioral” threshold, NMFS uses 150 dB as the threshold for adverse behavioral effects.[68]

Based on empirical data from actual construction sites, peak sound pressures from installing a sheet pile cofferdam with a vibratory driver are estimated to be below thresholds for injury and/or mortality:

Sheet piles installed with vibratory driver:[69]

- Peak[70] = 175 (typical) - 182 (loudest) dB
- SEL = 160-165 dB

65 Hastings and Popper. 2005. Effects of Sound on Fish. (J&S 43A0139). Prepared for the California Department of Transportation. Sacramento, Ca.
66 CalTrans. 2015. Technical Guidance for Assessment and Mitigation of the Hydroacoustic Effects of Pile Driving on Fish. November 2015.
67 Fisheries Hydroacoustic Workgroup. 2008. Agreement in Principal for Interim Criteria for Injury to Fish from Pile Driving Activities. NMFS NW & SW Regions, USFWS Regions 1 and 8, Cal/Wash/Ore Depts of Transportation, CDFG, and USFHA. Memorandum to Applicable Agency Staff. June 12.
68 CalTrans. 2015. Technical Guidance for Assessment and Mitigation of the Hydroacoustic Effects of Pile Driving on Fish. November 2015.
69 CalTrans. 2007. Compendium of Pile Driving Data. Table 1.2-2 from compendium dataset.
70 Peak sound pressure refers to the highest absolute value of a measured waveform (i.e., sound pressure pulse as a function of time).

Estimated pressures are above thresholds for behavioral effects (150dB threshold), however, behavioral effects are not expected to be an issue due to timing restrictions (seasonal work window). Furthermore, because of the timing of in-water construction (NMFS-approved seasonal work window), most special-status fish are not present in the areas affected by elevated sound levels from pile driving activities. For most species with migratory life stages that have the potential to be present, only a small portion of the population is expected to be exposed to the increased underwater sound levels because these increases generally would occur outside of peak migration periods.

Based on a review of the construction techniques (e.g., use of vibratory hammers and in-water work window), NMFS threshold criteria for harm and injury, and empirical data from actual construction sites, underwater sound effects are not likely to adversely affect fish species. In addition, implementation of Avoidance and Minimization Measure 2 would, in the unlikely event that special-status fish or other aquatic species are present during pile driving activity, reduce adverse effects on these species.

Water and Sediment Quality Impairment

Installation of a sheet piles has the potential to result in the short-term, temporary disturbance and resuspension of benthic sediments. Sediment resuspension has the potential to increase the exposure of potential harmful chemicals, in particular methylmercury, sequestered in the sediment to aquatic receptors in the immediate area, and result in adverse water quality and biological effects.[71] Suspended sediments in the water column can lower levels of dissolved oxygen, increase concentrations of suspended solids, and possibly release chemicals present in the sediments into the water column. However, increased turbidity levels would be relatively short-lived and generally confined to within a few hundred feet of the activity. After initially high turbidity levels, sediments would disperse and deposit, and background levels would be expected to be restored within hours of disturbance.

7.2 CDFW Terrestrial Species

Species accounts for CDFW-listed terrestrial species with a moderate to high potential to occur in the study area are summarized below.

Ridgway's rail (*Rallus obsoletus*) **–** federal and state listed endangered species

Ridgway's rail (formerly California clapper rail) ranges along the Pacific Coast in Monterey and San Luis Obispo Counties and inhabits tidal mudflats and sloughs. There are numerous CNDDB records of this species north of the Project site at the confluence of Artesian Slough and Coyote Creek, and Coyote Creek and Alviso Slough. The complex vegetative structure and channel networks of the tidal marshes in the region provide excellent habitat for Ridgway's rails. Optimal habitat for Ridgway's rail comprises tidal salt marsh with direct tidal circulation, an intricate network of tidal sloughs, pickleweed with cordgrass, gumplant, and other high-marsh plants, and

[71] Tetra Tech, Inc. and Wetlands and Water Resources, Inc. 2013. *Suisun Marsh Conceptual Model/Impairment Assessment Report for Organic Enrichment, Dissolved Oxygen, Mercury, Salinity, and Nutrients*. 2013.

abundant and dense high-marsh vegetation for cover during high tides.[72] Brackish marshes are generally not considered to be suitable habitat. Although the freshwater influence found in the Project site may not provide high quality habitat, Ridgway's rail could be present downstream of the Project site in Artesian Slough where tidal action is more dominant and salinity levels are higher. Less likely but still possible, this species could forage in the marsh vegetation on the Artesian Slough side of the levee in the Project site. There are records of this species occurring northeast of the Project site in the Alviso pond complex; however, the most recent of those shown in the CNDDB is from an observation made in 1975.[73] More recent surveys by the biological staff of the Don Edwards San Francisco Bay National Wildlife Refuge have detected Ridgway's rail presence in the restored tidal marsh habitat in Pond A21, directly north of the Project site.[74]

Northern harrier (*Circus cyaneus*) – state species of special concern

Northern harrier is a common breeder of the central coast where it breeds and forages in a range of open habitats, including freshwater, brackish and saltwater marshes; wet meadows; weedy borders of lakes, rivers and streams; annual and perennial grasslands (including those with vernal pools); weed fields, pastures and some croplands; sagebrush flats; and desert sinks. Northern harriers nest on the ground in patches of vegetation that provide some cover, and feed on a broad variety of small- to medium-sized rodents and passerines. Voles are a common prey item. Northern harriers have the potential to occur within the emergent wetland habitat adjacent to the study area.

Tricolored blackbird (*Agelaius tricolor*) – candidate for state listing

Tricolored blackbird is a permanent resident of the Central Valley but breeds in scattered coastal locations from Marin County to San Diego. This species nests colonially, with a typical minimum colony size of 50 pairs, in dense marsh vegetation such as cattails (*Typha* spp.) and bulrush (*Scirpus* spp.). Tricolored blackbird has potential to nest within the dense marsh vegetation along the edges of Artesian Slough. The nearest record of this species occurred within ¼-mile of the Project site in 1995.[75]

Saltmarsh common yellowthroat (*Geothlypis trichas sinuosa*) – state species of special concern

Saltmarsh common yellowthroat is found in Marin, Napa, Sonoma, Solano, San Francisco, San Mateo, Santa Clara, and Alameda counties within freshwater marshes in summer and salt or brackish marshes in fall and winter. This species utilizes areas of tall grasses, tules, and willow thickets for cover and nesting substrate. There are multiple CNDDB records of this species north

72 Albertson, J. and J. Evans. 2000. California Clapper Rail. pp. 332-340 In: Goals Project, 2000. Bayland Ecosystem Species and Community Profiles: Life histories and environmental requirements of key plants, fish and wildlife. Prepared by the San Francisco Bay Area Wetlands Ecosystems Goals Project. P.R. Olofson, editor. San Francisco Bay Regional Water Quality Control Board, Oakland, California.

73 CDFW, 2017. CNDDB. Federal Endangered and Threatened Species that May Be Affected by Projects in the Milpitas, Mountain View, Calaveras Reservoir, Newark, Niles, La Costa Valley, Cupertino, San Jose East, and San Jose West, California, U.S. Geological Survey 7.5-minute topographic quadrangles. *Rarefind 5*. Accessed April 10, 2017

74 South Bay Salt Pond Restoration Project. 2014. Annual Report. Available at http://www.southbayrestoration.org/documents/technical/SBSPR_2014AR_WebReady.pdf. Accessed July 2017.

75 Ibid.

and west of the Project site. Salt marsh common yellowthroat has potential to occur within fresh and saltwater marsh vegetation along Artesian Slough, Coyote Creek, and marshes in the northern and southwestern portions of the Project site. The nearest record of this species, in 1998, is approximately ½-mile away from the Project site.[76]

Alameda song sparrow (*Melospiza melodia pusillula*) – state species of special concern

Alameda song sparrow is found in the brackish marshes vegetated with pickleweed along the southern portion of the San Francisco Bay. This species is known to nest within tall vegetation or in pickleweed within its marsh habitat. This species has potential to occur within the brackish marsh habitat along Artesian Slough and Coyote Creek. The nearest record of this species occurred in 2004 and was located less than ¼-mile away from the Project site.[77]

Salt marsh harvest mouse (*Reithrodontomys raviventris*) – federal and state listed endangered species; state fully protected species

Salt marsh harvest mouse inhabits salt marsh habitat vegetated with pickleweed around the greater San Francisco Bay. There are records of this species occurring less than 1.5 miles north of the Project site in 1990[78]; however, there are substantial barriers to dispersal from those areas into the Project site, and the actual habitat on site is patchy and of very low quality. Thus, salt marsh harvest mouse has potential to occur in the salt marsh habitat in the southwestern portions of the Project site, but is very unlikely to be present.

Western pond turtle (*Emys marmorata*) – state species of special concern

Western pond turtle is an olive-drab turtle that inhabits a wide variety of water bodies, including ponds, marshes, rivers, streams, and irrigation canals. This species can tolerate full-strength sea water for a short period of time, but normally is found in freshwater. Western pond turtle females migrate away from their water bodies into surrounding uplands, where they construct underground nests and lay eggs from April to August. This species has potential to occur in Coyote Creek and Artesian Slough, primarily north of the Project site. However, the nearest record of this species is over 4 miles from the Project site in Guadalupe River.[79]

7.2.1 Effects on Terrestrial Species

As the terrestrial species occupy many different habitats within the study area, potential direct and indirect effects from the proposed action are discussed by the effect on each respective taxonomic group (e.g., birds, mammals).

76 Ibid.
77 Ibid.
78 Ibid.
79 CDFW, 2017. CNDDB. Federal Endangered and Threatened Species that May Be Affected by Projects in the Milpitas, Mountain View, Calaveras Reservoir, Newark, Niles, La Costa Valley, Cupertino, San Jose East, and San Jose West, California, U.S. Geological Survey 7.5-minute topographic quadrangles. *Rarefind 5*. Accessed April 10, 2017.

Effects on Birds

Effects on special status, and resident and migratory species could occur during Project construction, and during breeding seasons in particular. Effects related to Project implementation during the non-breeding season are not likely to adversely affect special-status bird species, as a birds' mobility and ability to access other high-quality foraging and nesting habitat in the region limit the potential for direct effects. However, Project construction would render the site temporarily unsuitable for birds due to the noise, vibrations, and increased activity levels associated with vegetation grubbing, earth moving, pile driving, and heavy equipment operation. These activities could subject birds to risk of death or injury, however, they are likely to avoid using the area during Project construction. Avoidance, in turn, could cause hunger or stress among individual birds by displacing them into adjacent territories.

Construction impacts during the breeding season, however, would be considered significant due to the potential to result in "take", or loss, of a nest; disturbances during the nesting season can cause reduced incubation, reduced foraging by adults, reduced feeding of chicks, nest predation, nest abandonment, and other forms of nest failure. Avoidance and Minimization Measure 3: Special-status Bird Protection Measures would reduce adverse effects on Ridgway's rail and other protected bird species by requiring preconstruction surveys, and implementing avoidance measures if active nests are located.

Effects on Mammals

No salt marsh vegetation suitable for use by salt marsh harvest mouse is present in the study area. Therefore, there would be no direct effects to, or loss of, salt marsh harvest mouse habitat. However, marginally suitable habitat for salt-marsh harvest mouse occurs in the non-tidal portion of Artesian Marsh located south of the Project site. Since no construction activities are proposed in Artesian Marsh, no salt marsh harvest mouse habitat would directly be affected by the Project.

Impacts of construction noise and vibration on salt-marsh harvest mice individuals present in the project vicinity are unknown, but if present, mice could be temporarily subject to increased stress during construction since their ability to avoid the noise and vibrations associated with Project construction would be constrained by site conditions. Project construction activities may result in harm or harassment of salt marsh harvest mouse individuals, which would be likely to adversely affect the species. Avoidance and Minimization Measure 4: Salt Marsh Harvest Mouse Protection Measures would reduce adverse effects on this species by implementing avoidance and minimization measures, conducting preconstruction surveys, and installing exclusion fencing.

Effects on Reptiles

Western pond turtles pond turtles have the potential utilize both the aquatic and terrestrial portions of the study area. If present in the aquatic environment during Project construction, potential effects on pond turtles would be identical to those described above for aquatic species. That is, they would be comprised primarily of the temporary exposure to elevated noise levels and the impairment of localized water quality. There is suitable aquatic habitat for western pond turtle in the marsh vegetation of Artesian Slough. The species could utilize the Project site for dispersal or migratory movement to aquatic features in the surrounding areas. As such, construction activities would

likely adversely affect western pond turtles through direct mortality or upland habitat disturbance. Avoidance and Minimization Measure 5: Western Pond Turtle Protection Measures would reduce adverse effects on this species by requiring project construction workers to complete a worker environmental awareness training, conducting preconstruction surveys, relocation of western pond turtles off the construction site, and avoidance of western pond turtle nests.

8.0 Conclusions and Determinations

8.1 ESA Section 7

This section discusses the conclusions of this document that were formulated using the discussion of potential species present, habitat presence and suitability, and Project effects discussed in previous sections.

8.1.1 Federal ESA Protected and Candidate Aquatic Species (NMFS and USFWS)

The proposed Project's in-water components are comprised primarily of the installation of sheet piles and the backfilling of a small portion of aquatic habitat. Project actions could, but are not expected to, adversely affect green sturgeon, longfin smelt (federal candidate species, USFWS), CCC steelhead, and CV Chinook fall-run salmon; or the Critical Habitat for those FESA protected species. These effects would be the result of:

- Underwater noise effects to fish, and
- Water quality impairment, and the
- Alteration of Essential Fish Habitat (see Section 8.2).

Implementation of the proposed conservation measures (described in Section 3) are expected to result in either avoidance or minimization of these effects.

The installation of sheet piles will generate noise levels that may disturb species of concern within the study area. This disturbance is expected to result in short-term and temporary altered swimming and foraging behavior as well as temporary exclusion from some foraging areas immediately adjacent to surrounding the pile driving activity, which would occur over four to eight days. Again, much of that would not be "in-water work" because many of the piles would be going into the levee top surface or side slopes. As vibratory hammers will be used for pile installation it is not expected that sound levels will generated that could result in barotrauma or direct mortality for any aquatic species. The majority of pile driving will occur at low tide, when the mudflat is exposed, which would eliminate any potential impacts for underwater noise. Additionally, the natural avoidance behavior of fish from the noise and disturbance caused by the placement of the steel pile on the slough floor prior to vibratory pile driving can be expected to limit the presence of any species of concern.

Localized water quality impairment, primarily due to sediment disturbance and increased turbidity, can be expected to occur during the in-water portion of pile driving and fill placement. The high tidal flushing and water exchange present in the waters adjacent to the Project site, and the naturally-occurring suspension of sediments would result in short-term increases in suspended sediments/turbidity within the area of construction only, and is not expected to result in any substantial or chronic adverse effects to considered species.

8.1.2 Federal-ESA Protected Terrestrial Species (USFWS)

As described above, due primarily to the limited nature of the suitable habitat available to terrestrial species within the study area, effects from Project construction would most likely result only in the temporary disturbance of special-status terrestrial species.

For special status bird, mammal and reptile species, the avoidance and minimization measures described in **Section 3** would reduce potential impacts by requiring preconstruction surveys, and implementing avoidance measures if active nests or individual species are located.

8.2 Magnuson-Stevens Fishery Conservation and Management Act (Essential Fish Habitat)

The proposed Project will temporarily impact EFH within the study area due to temporary and localized increased turbidity and underwater noise. The Project will also permanently modify a small amount of benthic substrate within the study due to placement of fill needed to stabilize the installed sheet piles. Potential impacts to EFH from pile driving will be temporary and minor, and generally limited to the immediate area of piles that will be installed during the Project. The installation of sheet piles will temporarily displace some fish during active pile driving; however, the installation of sheet piles with vibratory hammer will not cause acute barotrauma (i.e., tissue damage) and temporary displacement of fish will be short lived.

Without addressing the instability of the South Gate Structure and surrounding levee there is the potential for future significant impacts to EFH within the study area. The potential failure of the structure or surrounding levee would result in impacts to EFH of a greater magnitude than that which would occur with Project implementation. As such, the proposed Project can be thought of as a preventative step aimed at protecting EFH within the study area.

8.3 Summary of Effects

The proposed action will result in temporary and permanent impacts to ESA- and MSA-managed species or candidate species. The proposed action will result in:

- Permanent impact to FESA-listed and MSA-managed aquatic species habitat resulting from the small loss of EFH during fill placement (**Table 3**);
- Permanent impact to Tidal Freshwater Marsh and Open Water resulting from fill (**Table 3**);
- Minor temporary impacts to individual special-status fish species during construction, primarily through disturbance and habitat avoidance;
- Minor temporary impacts to individual special-status bird species during construction, primarily through disturbance and habitat avoidance;
- Potential temporary impacts to designated critical habitat for CCC steelhead and green sturgeon, primarily through short-term turbidity and noise-related disturbance.

TABLE 3
EFFECTS[1] ON NATURAL COMMUNITIES DUE TO FILL

Corner	Natural Community	Area (ft^2)	Fill Volume (yd^3)
Total Quantities of Fill Material			
Southwest; Southeast; Northwest; Northeast	Bareground/Peripheral Halophyte Zone	1,072	**100**
Quantities Placed at or Below 9 Foot Elevation NAVD88			
Southwest; Northwest	Tidal Freshwater Marsh	342	28
Southeast; Northeast	Open Water	157	11
Total		**500**	**39**

NOTES:
1 All areas and volumes in this table were rounded up to the nearest unit to be conservative. Some rounding error was thus introduced.
2 Fill volumes were estimated from preliminary designs. The total volume of backfill material would not exceed 100 cubic yards.
3. The volume and area of sheet piles and backfill material are presented together; the sheet piles make a *de minimus* contribution (estimated at 2-4%) to the total volume of fill to be placed.

In summary, although anticipated and potential impacts have been identified, the magnitude of these impacts will be significantly reduced based on: (a) the avoidance and minimization measures proposed in this document; (b) the specific avoidance and minimization measures proposed for pile driving activities; and (c) the relatively small percentage of habitat and temporary nature of most Project activities that would be involved.

Attachments

Attachment A: Special-Status Species Occurrences in Nine-Quad Search Encompassing Study Area

Selected Elements by Scientific Name

California Department of Fish and Wildlife

California Natural Diversity Database

Query Criteria: Quad IS (Calaveras Reservoir (3712147) OR Cupertino (3712231) OR La Costa Valley (3712157) OR Milpitas (3712148) OR Mountain View (3712241) OR Newark (3712251) OR Niles (3712158) OR San Jose East (3712137) OR San Jose West (3712138))

Species	Element Code	Federal Status	State Status	Global Rank	State Rank	Rare Plant Rank/CDFW SSC or FP
Accipiter cooperii Cooper's hawk	ABNKC12040	None	None	G5	S4	WL
Accipiter striatus sharp-shinned hawk	ABNKC12020	None	None	G5	S4	WL
Adela oplerella Opler's longhorn moth	IILEE0G040	None	None	G2	S2	
Agelaius tricolor tricolored blackbird	ABPBXB0020	None	Candidate Endangered	G2G3	S1S2	SSC
Ambystoma californiense California tiger salamander	AAAAA01180	Threatened	Threatened	G2G3	S2S3	WL
Aneides niger Santa Cruz black salamander	AAAAD01070	None	None	G3	S3	SSC
Antrozous pallidus pallid bat	AMACC10010	None	None	G5	S3	SSC
Aquila chrysaetos golden eagle	ABNKC22010	None	None	G5	S3	FP
Ardea herodias great blue heron	ABNGA04010	None	None	G5	S4	
Astragalus tener var. tener alkali milk-vetch	PDFAB0F8R1	None	None	G2T2	S2	1B.2
Athene cunicularia burrowing owl	ABNSB10010	None	None	G4	S3	SSC
Atriplex depressa brittlescale	PDCHE042L0	None	None	G2	S2	1B.2
Atriplex minuscula lesser saltscale	PDCHE042M0	None	None	G2	S2	1B.1
Balsamorhiza macrolepis big-scale balsamroot	PDAST11061	None	None	G2	S2	1B.2
Bombus caliginosus obscure bumble bee	IIHYM24380	None	None	G4?	S1S2	
Bombus crotchii Crotch bumble bee	IIHYM24480	None	None	G3G4	S1S2	
Bombus occidentalis western bumble bee	IIHYM24250	None	None	G2G3	S1	
Buteo swainsoni Swainson's hawk	ABNKC19070	None	Threatened	G5	S3	
California macrophylla round-leaved filaree	PDGER01070	None	None	G3?	S3?	1B.2

Species	Element Code	Federal Status	State Status	Global Rank	State Rank	Rare Plant Rank/CDFW SSC or FP
Campanula exigua chaparral harebell	PDCAM020A0	None	None	G2	S2	1B.2
Centromadia parryi ssp. congdonii Congdon's tarplant	PDAST4R0P1	None	None	G3T2	S2	1B.1
Charadrius alexandrinus nivosus western snowy plover	ABNNB03031	Threatened	None	G3T3	S2S3	SSC
Chloropyron maritimum ssp. palustre Point Reyes salty bird's-beak	PDSCR0J0C3	None	None	G4?T2	S2	1B.2
Chorizanthe robusta var. robusta robust spineflower	PDPGN040Q2	Endangered	None	G2T1	S1	1B.1
Circus cyaneus northern harrier	ABNKC11010	None	None	G5	S3	SSC
Cirsium fontinale var. campylon Mt. Hamilton fountain thistle	PDAST2E163	None	None	G2T2	S2	1B.2
Clarkia concinna ssp. automixa Santa Clara red ribbons	PDONA050A1	None	None	G5?T3	S3	4.3
Coccyzus americanus occidentalis western yellow-billed cuckoo	ABNRB02022	Threatened	Endangered	G5T2T3	S1	
Collinsia multicolor San Francisco collinsia	PDSCR0H0B0	None	None	G2	S2	1B.2
Corynorhinus townsendii Townsend's big-eared bat	AMACC08010	None	None	G3G4	S2	SSC
Danaus plexippus pop. 1 monarch - California overwintering population	IILEPP2012	None	None	G4T2T3	S2S3	
Delphinium californicum ssp. interius Hospital Canyon larkspur	PDRAN0B0A2	None	None	G3T3	S3	1B.2
Dicamptodon ensatus California giant salamander	AAAAH01020	None	None	G3	S2S3	SSC
Dipodomys heermanni berkeleyensis Berkeley kangaroo rat	AMAFD03061	None	None	G3G4T1	S1	
Dipodomys venustus venustus Santa Cruz kangaroo rat	AMAFD03042	None	None	G4T1	S1	
Dirca occidentalis western leatherwood	PDTHY03010	None	None	G2	S2	1B.2
Dudleya abramsii ssp. setchellii Santa Clara Valley dudleya	PDCRA040Z0	Endangered	None	G4T2	S2	1B.1
Egretta thula snowy egret	ABNGA06030	None	None	G5	S4	
Elanus leucurus white-tailed kite	ABNKC06010	None	None	G5	S3S4	FP
Emys marmorata western pond turtle	ARAAD02030	None	None	G3G4	S3	SSC

Species	Element Code	Federal Status	State Status	Global Rank	State Rank	Rare Plant Rank/CDFW SSC or FP
Eryngium aristulatum var. hooveri Hoover's button-celery	PDAPI0Z043	None	None	G5T1	S1	1B.1
Euphydryas editha bayensis Bay checkerspot butterfly	IILEPK4055	Threatened	None	G5T1	S1	
Extriplex joaquinana San Joaquin spearscale	PDCHE041F3	None	None	G2	S2	1B.2
Falco mexicanus prairie falcon	ABNKD06090	None	None	G5	S4	WL
Falco peregrinus anatum American peregrine falcon	ABNKD06071	Delisted	Delisted	G4T4	S3S4	FP
Fritillaria liliacea fragrant fritillary	PMLIL0V0C0	None	None	G2	S2	1B.2
Geothlypis trichas sinuosa saltmarsh common yellowthroat	ABPBX1201A	None	None	G5T3	S3	SSC
Hoita strobilina Loma Prieta hoita	PDFAB5Z030	None	None	G2	S2	1B.1
Lasiurus cinereus hoary bat	AMACC05030	None	None	G5	S4	
Lasthenia conjugens Contra Costa goldfields	PDAST5L040	Endangered	None	G1	S1	1B.1
Laterallus jamaicensis coturniculus California black rail	ABNME03041	None	Threatened	G3G4T1	S1	FP
Lepidurus packardi vernal pool tadpole shrimp	ICBRA10010	Endangered	None	G4	S3S4	
Lessingia micradenia var. glabrata smooth lessingia	PDAST5S062	None	None	G2T2	S2	1B.2
Linderiella occidentalis California linderiella	ICBRA06010	None	None	G2G3	S2S3	
Malacothamnus arcuatus arcuate bush-mallow	PDMAL0Q0E0	None	None	G2Q	S2	1B.2
Malacothamnus hallii Hall's bush-mallow	PDMAL0Q0F0	None	None	G2	S2	1B.2
Masticophis lateralis euryxanthus Alameda whipsnake	ARADB21031	Threatened	Threatened	G4T2	S2	
Melospiza melodia pusillula Alameda song sparrow	ABPBXA301S	None	None	G5T2?	S2S3	SSC
Microcina homi Hom's micro-blind harvestman	ILARA47020	None	None	G1	S1	
Monolopia gracilens woodland woollythreads	PDAST6G010	None	None	G3	S3	1B.2
Myotis evotis long-eared myotis	AMACC01070	None	None	G5	S3	

Species	Element Code	Federal Status	State Status	Global Rank	State Rank	Rare Plant Rank/CDFW SSC or FP
Myotis yumanensis Yuma myotis	AMACC01020	None	None	G5	S4	
Navarretia prostrata prostrate vernal pool navarretia	PDPLM0C0Q0	None	None	G2	S2	1B.1
Neotoma fuscipes annectens San Francisco dusky-footed woodrat	AMAFF08082	None	None	G5T2T3	S2S3	SSC
Northern Coastal Salt Marsh Northern Coastal Salt Marsh	CTT52110CA	None	None	G3	S3.2	
Oncorhynchus mykiss irideus steelhead - central California coast DPS	AFCHA0209G	Threatened	None	G5T2T3Q	S2S3	
Plagiobothrys glaber hairless popcornflower	PDBOR0V0B0	None	None	GH	SH	1A
Puccinellia simplex California alkali grass	PMPOA53110	None	None	G3	S2	1B.2
Rallus longirostris obsoletus California clapper rail	ABNME05016	Endangered	Endangered	G5T1	S1	FP
Rana boylii foothill yellow-legged frog	AAABH01050	None	None	G3	S3	SSC
Rana draytonii California red-legged frog	AAABH01022	Threatened	None	G2G3	S2S3	SSC
Reithrodontomys raviventris salt-marsh harvest mouse	AMAFF02040	Endangered	Endangered	G1G2	S1S2	FP
Riparia riparia bank swallow	ABPAU08010	None	Threatened	G5	S2	
Rynchops niger black skimmer	ABNNM14010	None	None	G5	S2	SSC
Senecio aphanactis chaparral ragwort	PDAST8H060	None	None	G3	S2	2B.2
Sidalcea malachroides maple-leaved checkerbloom	PDMAL110E0	None	None	G3	S3	4.2
Sorex vagrans halicoetes salt-marsh wandering shrew	AMABA01071	None	None	G5T1	S1	SSC
Spirinchus thaleichthys longfin smelt	AFCHB03010	Candidate	Threatened	G5	S1	SSC
Sternula antillarum browni California least tern	ABNNM08103	Endangered	Endangered	G4T2T3Q	S2	FP
Streptanthus albidus ssp. albidus Metcalf Canyon jewelflower	PDBRA2G011	Endangered	None	G2T1	S1	1B.1
Streptanthus albidus ssp. peramoenus most beautiful jewelflower	PDBRA2G012	None	None	G2T2	S2	1B.2
Stuckenia filiformis ssp. alpina slender-leaved pondweed	PMPOT03091	None	None	G5T5	S3	2B.2

Species	Element Code	Federal Status	State Status	Global Rank	State Rank	Rare Plant Rank/CDFW SSC or FP
Suaeda californica California seablite	PDCHE0P020	Endangered	None	G1	S1	1B.1
Sycamore Alluvial Woodland Sycamore Alluvial Woodland	CTT62100CA	None	None	G1	S1.1	
Trifolium hydrophilum saline clover	PDFAB400R5	None	None	G2	S2	1B.2
Tryonia imitator mimic tryonia (=California brackishwater snail)	IMGASJ7040	None	None	G2	S2	

Record Count: 86

California Native Plant Society, Rare Plant Program. 2017. Inventory of Rare and Endangered Plants of California (online edition, v8-03 0.39). Website http://www.rareplants.cnps.org [accessed 11 April 2017].

Scientific Name	Common Name	Family	Lifeform	CRPR	GRank	SRank	CESA	FESA	Blooming Period
Acanthomintha lanceolata	Santa Clara thorn-mint	Lamiaceae	annual herb	4.2	G4	S4	None	None	Mar-Jun
Androsace elongata ssp. acuta	California androsace	Primulaceae	annual herb	4.2	G5?T3T4	S3S4	None	None	Mar-Jun
Astragalus tener var. tener	alkali milk-vetch	Fabaceae	annual herb	1B.2	G2T2	S2	None	None	Mar-Jun
Atriplex depressa	brittlescale	Chenopodiaceae	annual herb	1B.2	G2	S2	None	None	Apr-Oct
Atriplex minuscula	lesser saltscale	Chenopodiaceae	annual herb	1B.1	G2	S2	None	None	May-Oct
Balsamorhiza macrolepis	big-scale balsamroot	Asteraceae	perennial herb	1B.2	G2	S2	None	None	Mar-Jun
Calandrinia breweri	Brewer's calandrinia	Montiaceae	annual herb	4.2	G4	S4	None	None	(Jan)Mar-Jun
California macrophylla	round-leaved filaree	Geraniaceae	annual herb	1B.2	G3?	S3?	None	None	Mar-May
Campanula exigua	chaparral harebell	Campanulaceae	annual herb	1B.2	G2	S2	None	None	May-Jun
Centromadia parryi ssp. congdonii	Congdon's tarplant	Asteraceae	annual herb	1B.1	G3T2	S2	None	None	May-Oct(Nov)
Chloropyron maritimum ssp. palustre	Point Reyes bird's-beak	Orobanchaceae	annual herb (hemiparasitic)	1B.2	G4?T2	S2	None	None	Jun-Oct
Chorizanthe robusta var. robusta	robust spineflower	Polygonaceae	annual herb	1B.1	G2T1	S1	None	FE	Apr-Sep
Cirsium fontinale var. campylon	Mt. Hamilton fountain thistle	Asteraceae	perennial herb	1B.2	G2T2	S2	None	None	(Feb)Apr-Oct

Clarkia concinna ssp. automixa	Santa Clara red ribbons	Onagraceae	annual herb	4.3	G5?T3	S3	None	None	(Apr)May-Jun(Jul)
Clarkia lewisii	Lewis' clarkia	Onagraceae	annual herb	4.3	G4	S4	None	None	May-Jul
Collinsia multicolor	San Francisco collinsia	Plantaginaceae	annual herb	1B.2	G2	S2	None	None	(Feb)Mar-May
Cypripedium fasciculatum	clustered lady's-slipper	Orchidaceae	perennial rhizomatous herb	4.2	G4	S4	None	None	Mar-Aug
Delphinium californicum ssp. interius	Hospital Canyon larkspur	Ranunculaceae	perennial herb	1B.2	G3T3	S3	None	None	Apr-Jun
Dirca occidentalis	western leatherwood	Thymelaeaceae	perennial deciduous shrub	1B.2	G2	S2	None	None	Jan-Mar(Apr)
Dudleya abramsii ssp. setchellii	Santa Clara Valley dudleya	Crassulaceae	perennial herb	1B.1	G4T2	S2	None	FE	Apr-Oct
Eriophyllum jepsonii	Jepson's woolly sunflower	Asteraceae	perennial herb	4.3	G3	S3	None	None	Apr-Jun
Eryngium aristulatum var. hooveri	Hoover's button-celery	Apiaceae	annual / perennial herb	1B.1	G5T1	S1	None	None	(Jun)Jul(Aug)
Extriplex joaquinana	San Joaquin spearscale	Chenopodiaceae	annual herb	1B.2	G2	S2	None	None	Apr-Oct
Fritillaria agrestis	stinkbells	Liliaceae	perennial bulbiferous herb	4.2	G3	S3	None	None	Mar-Jun
Fritillaria liliacea	fragrant fritillary	Liliaceae	perennial bulbiferous herb	1B.2	G2	S2	None	None	Feb-Apr
Helianthella castanea	Diablo helianthella	Asteraceae	perennial herb	1B.2	G2	S2	None	None	Mar-Jun
Hoita strobilina	Loma Prieta hoita	Fabaceae	perennial herb	1B.1	G2	S2	None	None	May-Jul(Aug-Oct)

Iris longipetala	coast iris	Iridaceae	perennial rhizomatous herb	4.2	G3	S3	None	None	Mar-May
Lasthenia conjugens	Contra Costa goldfields	Asteraceae	annual herb	1B.1	G1	S1	None	FE	Mar-Jun
Leptosiphon acicularis	bristly leptosiphon	Polemoniaceae	annual herb	4.2	G3	S3	None	None	Apr-Jul
Leptosiphon ambiguus	serpentine leptosiphon	Polemoniaceae	annual herb	4.2	G4	S4	None	None	Mar-Jun
Lessingia hololeuca	woolly-headed lessingia	Asteraceae	annual herb	3	G3?	S3?	None	None	Jun-Oct
Lessingia micradenia var. glabrata	smooth lessingia	Asteraceae	annual herb	1B.2	G2T2	S2	None	None	(Apr-Jun)Jul-Nov
Malacothamnus arcuatus	arcuate bush-mallow	Malvaceae	perennial evergreen shrub	1B.2	G2Q	S2	None	None	Apr-Sep
Malacothamnus hallii	Hall's bush-mallow	Malvaceae	perennial evergreen shrub	1B.2	G2	S2	None	None	(Apr)May-Sep(Oct)
Micropus amphibolus	Mt. Diablo cottonweed	Asteraceae	annual herb	3.2	G3G4	S3S4	None	None	Mar-May
Mielichhoferia elongata	elongate copper moss	Mielichhoferiacea	moss	4.3	G5	S4	None	None	
Monardella antonina ssp. antonina	San Antonio Hills monardella	Lamiaceae	perennial rhizomatous herb	3	G4T1T3Q	S1S3	None	None	Jun-Aug
Monolopia gracilens	woodland woolythreads	Asteraceae	annual herb	1B.2	G3	S3	None	None	(Feb)Mar-Jul
Navarretia paradoxiclara	Patterson's navarretia	Polemoniaceae	annual herb	1B.3	G2	S2	None	None	May-Jun(Jul)
Navarretia prostrata	prostrate vernal pool navarretia	Polemoniaceae	annual herb	1B.1	G2	S2	None	None	Apr-Jul
Plagiobothrys glaber	hairless popcornflower	Boraginaceae	annual herb	1A	GH	SH	None	None	Mar-May

Puccinellia simplex	California alkali grass	Poaceae	annual herb	1B.2	G3	S2	None	None	Mar-May
Senecio aphanactis	chaparral ragwort	Asteraceae	annual herb	2B.2	G3	S2	None	None	Jan-Apr(May)
Sidalcea malachroides	maple-leaved checkerbloom	Malvaceae	perennial herb	4.2	G3	S3	None	None	(Mar)Apr-Aug
Streptanthus albidus ssp. albidus	Metcalf Canyon jewelflower	Brassicaceae	annual herb	1B.1	G2T1	S1	None	FE	Apr-Jul
Streptanthus albidus ssp. peramoenus	most beautiful jewelflower	Brassicaceae	annual herb	1B.2	G2T2	S2	None	None	(Mar)Apr-Sep(Oct)
Stuckenia filiformis ssp. alpina	slender-leaved pondweed	Potamogetonacea	perennial rhizomatous herb (aquatic)	2B.2	G5T5	S3	None	None	May-Jul
Suaeda californica	California seablite	Chenopodiaceae	perennial evergreen shrub	1B.1	G1	S1	None	FE	Jul-Oct
Trifolium hydrophilum	saline clover	Fabaceae	annual herb	1B.2	G2	S2	None	None	Apr-Jun
Tropidocarpum capparideum	caper-fruited tropidocarpum	Brassicaceae	annual herb	1B.1	G1	S1	None	None	Mar-Apr

United States Department of the Interior

FISH AND WILDLIFE SERVICE
San Francisco Bay-delta Fish And Wildlife
650 Capitol Mall
Suite 8-300
Sacramento, CA 95814
Phone: (916) 930-5603 Fax: (916) 930-5654
http://kim_squires@fws.gov

In Reply Refer To: April 11, 2017
Consultation Code: 08FBDT00-2017-SLI-0147
Event Code: 08FBDT00-2017-E-00252
Project Name: San Jose RWF Pond A-18 Levee Repair

Subject: List of threatened and endangered species that may occur in your proposed project location, and/or may be affected by your proposed project

To Whom It May Concern:

The enclosed species list identifies threatened, endangered, proposed and candidate species, as well as proposed and final designated critical habitat, that may occur within the boundary of your proposed project and/or may be affected by your proposed project. The species list fulfills the requirements of the U.S. Fish and Wildlife Service (Service) under section 7(c) of the Endangered Species Act (Act) of 1973, as amended (16 U.S.C. 1531 et seq.).

New information based on updated surveys, changes in the abundance and distribution of species, changed habitat conditions, or other factors could change this list. Please feel free to contact us if you need more current information or assistance regarding the potential impacts to federally proposed, listed, and candidate species and federally designated and proposed critical habitat. Please note that under 50 CFR 402.12(e) of the regulations implementing section 7 of the Act, the accuracy of this species list should be verified after 90 days. This verification can be completed formally or informally as desired. The Service recommends that verification be completed by visiting the ECOS-IPaC website at regular intervals during project planning and implementation for updates to species lists and information. An updated list may be requested through the ECOS-IPaC system by completing the same process used to receive the enclosed list.

The purpose of the Act is to provide a means whereby threatened and endangered species and the ecosystems upon which they depend may be conserved. Under sections 7(a)(1) and 7(a)(2) of the Act and its implementing regulations (50 CFR 402 et seq.), Federal agencies are required to utilize their authorities to carry out programs for the conservation of threatened and endangered species and to determine whether projects may affect threatened and endangered species and/or designated critical habitat.

A Biological Assessment is required for construction projects (or other undertakings having

similar physical impacts) that are major Federal actions significantly affecting the quality of the human environment as defined in the National Environmental Policy Act (42 U.S.C. 4332(2)(c)). For projects other than major construction activities, the Service suggests that a biological evaluation similar to a Biological Assessment be prepared to determine whether the project may affect listed or proposed species and/or designated or proposed critical habitat. Recommended contents of a Biological Assessment are described at 50 CFR 402.12.

If a Federal agency determines, based on the Biological Assessment or biological evaluation, that listed species and/or designated critical habitat may be affected by the proposed project, the agency is required to consult with the Service pursuant to 50 CFR 402. In addition, the Service recommends that candidate species, proposed species and proposed critical habitat be addressed within the consultation. More information on the regulations and procedures for section 7 consultation, including the role of permit or license applicants, can be found in the "Endangered Species Consultation Handbook" at:

http://www.fws.gov/endangered/esa-library/pdf/TOC-GLOS.PDF

Please be aware that bald and golden eagles are protected under the Bald and Golden Eagle Protection Act (16 U.S.C. 668 et seq.), and projects affecting these species may require development of an eagle conservation plan (http://www.fws.gov/windenergy/eagle_guidance.html). Additionally, wind energy projects should follow the wind energy guidelines (http://www.fws.gov/windenergy/) for minimizing impacts to migratory birds and bats.

Guidance for minimizing impacts to migratory birds for projects including communications towers (e.g., cellular, digital television, radio, and emergency broadcast) can be found at: http://www.fws.gov/migratorybirds/CurrentBirdIssues/Hazards/towers/towers.htm; http://www.towerkill.com; and http://www.fws.gov/migratorybirds/CurrentBirdIssues/Hazards/towers/comtow.html.

We appreciate your concern for threatened and endangered species. The Service encourages Federal agencies to include conservation of threatened and endangered species into their project planning to further the purposes of the Act. Please include the Consultation Tracking Number in the header of this letter with any request for consultation or correspondence about your project that you submit to our office.

Attachment(s):

- Official Species List

Official Species List

This list is provided pursuant to Section 7 of the Endangered Species Act, and fulfills the requirement for Federal agencies to "request of the Secretary of the Interior information whether any species which is listed or proposed to be listed may be present in the area of a proposed action".

This species list is provided by:

San Francisco Bay-delta Fish And Wildlife
650 Capitol Mall
Suite 8-300
Sacramento, CA 95814
(916) 930-5603

Project Summary

Consultation Code: 08FBDT00-2017-SLI-0147

Event Code: 08FBDT00-2017-E-00252

Project Name: San Jose RWF Pond A-18 Levee Repair

Project Type: STREAM / WATERBODY / CANALS / LEVEES / DIKES

Project Description: The South Gate Structure is approximately 11 years old, and despite ongoing maintenance activities, the portion of the levee immediately adjacent to the structure has undergone increasingly rapid deterioration in recent months due to a series of strong storm events. A recently conducted condition assessment classified its condition as "critical" due to formation of scour holes and levee embankment settlement and erosion on all four sides of the gate structure. Continued erosion of the levee will threaten the stability of the levee, impede access for RWF staff to continue to operate both gate structures, restrict vehicle access for levee inspections, and may result in a full levee breach.

Project Location:

Approximate location of the project can be viewed in Google Maps:
https://www.google.com/maps/place/37.44135830773574N121.95872513704798W

Counties: Santa Clara, CA

Endangered Species Act Species

There is a total of 18 threatened, endangered, or candidate species on your species list. Species on this list should be considered in an effects analysis for your project and could include species that exist in another geographic area. For example, certain fish may appear on the species list because a project could affect downstream species. See the "Critical habitats" section below for those critical habitats that lie wholly or partially within your project area. Please contact the designated FWS office if you have questions.

Mammals

NAME	STATUS
Salt Marsh Harvest Mouse *(Reithrodontomys raviventris)* No critical habitat has been designated for this species. Species profile: https://ecos.fws.gov/ecp/species/613	Endangered
San Joaquin Kit Fox *(Vulpes macrotis mutica)* No critical habitat has been designated for this species. Species profile: https://ecos.fws.gov/ecp/species/2873	Endangered

Birds

NAME	STATUS
California Clapper Rail *(Rallus longirostris obsoletus)* No critical habitat has been designated for this species. Species profile: https://ecos.fws.gov/ecp/species/4240	Endangered
California Least Tern *(Sterna antillarum browni)* No critical habitat has been designated for this species. Species profile: https://ecos.fws.gov/ecp/species/8104	Endangered
Western Snowy Plover *(Charadrius alexandrinus nivosus)* Population: Pacific Coast population DPS-U.S.A. (CA, OR, WA), Mexico (within 50 miles of Pacific coast) There is a **final** critical habitat designated for this species. Your location is outside the designated critical habitat. Species profile: https://ecos.fws.gov/ecp/species/8035	Threatened
Yellow-billed Cuckoo *(Coccyzus americanus)* Population: Western U.S. DPS There is a **proposed** critical habitat for this species. Your location is outside the proposed critical habitat. Species profile: https://ecos.fws.gov/ecp/species/3911	Threatened

Reptiles

NAME	STATUS
Alameda Whipsnake (=striped Racer) *(Masticophis lateralis euryxanthus)* There is a **final** critical habitat designated for this species. Your location is outside the designated critical habitat. Species profile: https://ecos.fws.gov/ecp/species/5524	Threatened

Amphibians

NAME	STATUS
California Red-legged Frog *(Rana draytonii)* There is a **final** critical habitat designated for this species. Your location is outside the designated critical habitat. Species profile: https://ecos.fws.gov/ecp/species/2891	Threatened
California Tiger Salamander *(Ambystoma californiense)* Population: U.S.A. (Central CA DPS) There is a **final** critical habitat designated for this species. Your location is outside the designated critical habitat. Species profile: https://ecos.fws.gov/ecp/species/2076	Threatened

Fishes

NAME	STATUS
Delta Smelt *(Hypomesus transpacificus)* There is a **final** critical habitat designated for this species. Your location is outside the designated critical habitat. Species profile: https://ecos.fws.gov/ecp/species/321	Threatened
Steelhead *(Oncorhynchus (=Salmo) mykiss)* Population: Northern California DPS There is a **final** critical habitat designated for this species. Your location is outside the designated critical habitat. Species profile: https://ecos.fws.gov/ecp/species/1007	Threatened

Insects

NAME	STATUS
Bay Checkerspot Butterfly *(Euphydryas editha bayensis)* There is a **final** critical habitat designated for this species. Your location is outside the designated critical habitat. Species profile: https://ecos.fws.gov/ecp/species/2320	Threatened
San Bruno Elfin Butterfly *(Callophrys mossii bayensis)* No critical habitat has been designated for this species. Species profile: https://ecos.fws.gov/ecp/species/3394	Endangered

Crustaceans

NAME	STATUS
Conservancy Fairy Shrimp *(Branchinecta conservatio)* There is a **final** critical habitat designated for this species. Your location is outside the designated critical habitat. Species profile: https://ecos.fws.gov/ecp/species/8246	Endangered
Vernal Pool Tadpole Shrimp *(Lepidurus packardi)* There is a **final** critical habitat designated for this species. Your location is outside the designated critical habitat. Species profile: https://ecos.fws.gov/ecp/species/2246	Endangered

Flowering Plants

NAME	STATUS
California Seablite *(Suaeda californica)* No critical habitat has been designated for this species. Species profile: https://ecos.fws.gov/ecp/species/6310	Endangered
Contra Costa Goldfields *(Lasthenia conjugens)* There is a **final** critical habitat designated for this species. Your location is outside the designated critical habitat. Species profile: https://ecos.fws.gov/ecp/species/7058	Endangered
Robust Spineflower *(Chorizanthe robusta var. robusta)* There is a **final** critical habitat designated for this species. Your location is outside the designated critical habitat. Species profile: https://ecos.fws.gov/ecp/species/9287	Endangered

Critical habitats

There are no critical habitats within your project area.

APPENDIX C

Engineering Design Plans

CITY OF SAN JOSE

SAN JOSE-SANTA CLARA REGIONAL WASTEWATER FACILITY
POND A18 SOUTH GATE LEVEE REPAIR PROJECT
(SHEET PILE RETAINING WALL)
JULY 2017

GENERAL NOTES

1. STANDARD SPECIFICATIONS

   ALL MATERIALS AND CONSTRUCTION METHODS SHALL COMPLY WITH THE REQUIREMENTS OF THE STATE OF CALIFORNIA DEPARTMENT OF TRANSPORTATION (CALTRANS) STANDARD SPECIFICATIONS, 2015 EDITION, UNLESS OTHERWISE NOTED ON THESE PLANS.

2. PERMITS

   THE OWNER WILL BE RESPONSIBLE FOR OBTAINING ALL REQUIRED PERMITS.

3. TRAFFIC CONTROL AND PUBLIC SAFETY

   THE CONTRACTOR SHALL PROVIDE ALL LIGHTS, SIGNS, BARRICADES, FENCING, FLAGGING, AND OTHER DEVICES NECESSARY FOR TRAFFIC CONTROL AND PUBLIC SAFETY.

4. EXISTING FACILITIES

   EXISTING SITE IMPROVEMENTS TO REMAIN MAY INTERFERE WITH THE WORK. THESE FACILITIES SHALL BE PROTECTED OR REMOVED AND REPLACED WITH LIKE-KIND AND QUALITY AT THE CONTRACTOR'S EXPENSE.

5. SITE ACCESS

   THE CONTRACTOR SHALL COORDINATE WITH CITY STAFF FOR ACCESS TO SITE THROUGH SECURE GATE(S).

6. SITE INFORMATION

   THE CONTRACTOR SHALL BE RESPONSIBLE FOR LOCATING ALL ABOVE GROUND AND UNDERGROUND FACILITIES WHICH MAY BE AFFECTED BY HIS/HER OPERATIONS. THE CONTRACTOR SHALL CONTACT OWNERS OF THESE FACILITIES AND SHALL PROTECT FACILITIES AND MAINTAIN SERVICE DURING CONSTRUCTION. THE CONTRACTOR SHALL CONTACT UNDERGROUND SERVICE ALERT (USA) AT (800) 642-2444 AT LEAST TWO WORKING DAYS PRIOR TO CONSTRUCTION.

   DIMENSIONS AND LIMITS OF WORK SHOWN ON THE PLANS ARE APPROXIMATE AND ARE SUBJECT TO CHANGE BASED ON CONDITIONS ENCOUNTERED. CONTRACTOR SHALL VERIFY ALL EXISTING DIMENSIONS AND SITE CONDITIONS PRIOR TO THE START OF CONSTRUCTION. DISCREPANCIES BETWEEN ACTUAL CONDITIONS AND THOSE SHOWN ON THE PLANS SHALL BE IMMEDIATELY BROUGHT TO THE ATTENTION OF THE ENGINEER.

7. INSPECTIONS

   ENGINEERING INSPECTIONS WILL BE CARRIED OUT BY CAL ENGINEERING & GEOLOGY, INC. (408) 440-4542. THE CONTRACTOR SHALL COORDINATE WITH THE ENGINEER AT LEAST TWO WORKING DAYS PRIOR TO ALL REQUIRED INSPECTIONS.

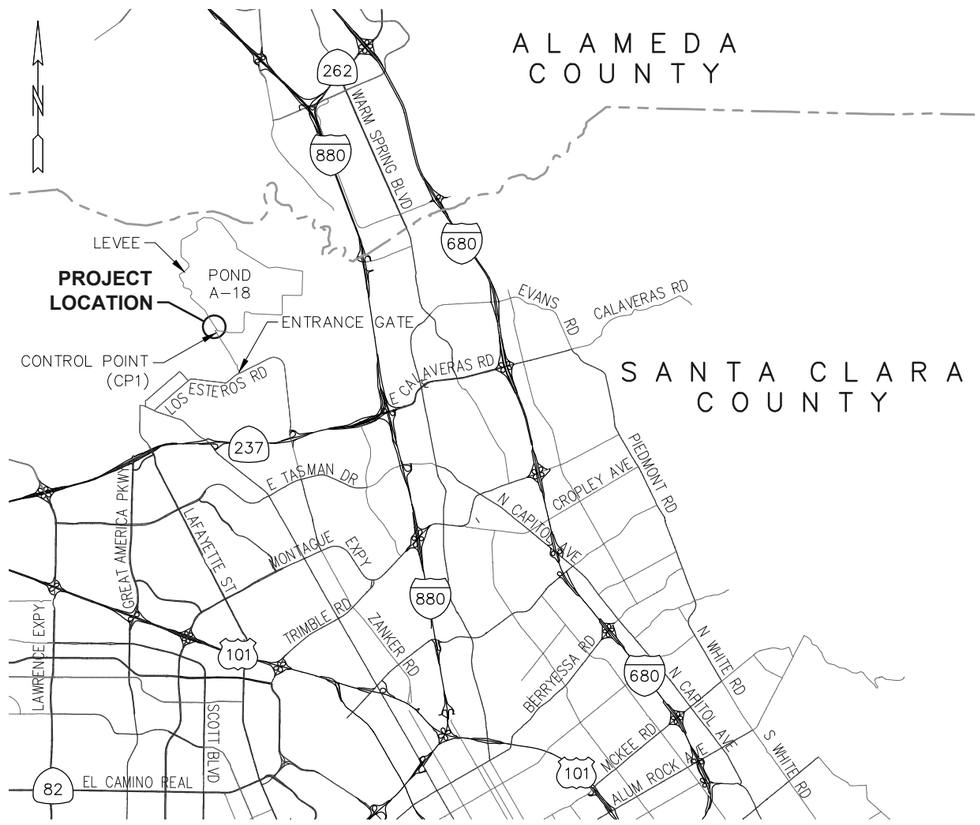

VICINITY MAP

1 0 1 2
SCALE MILES

DESCRIPTION OF WORK

THE WORK SHALL CONSIST IN GENERAL OF PROVIDING ALL MATERIAL, LABOR, AND EQUIPMENT NECESSARY TO COMPLETE THE SHEET PILE RETAINING WALL PROJECT. THE WORK SHALL INCLUDE, BUT NOT BE LIMITED TO: MOBILIZATION, WATER POLLUTION CONTROL, CLEARING AND GRUBBING, STRUCTURE EXCAVATION AND BACKFILL, TEMPORARY STOCKPILE, SHEET PILE RETAINING WALL WITH WALER SYSTEM AND BULKHEAD GAP SEAL, AGGREGATE BASE, CLEAN UP AND DEMOBILIZATION.

CONTRACTOR LICENSE

THE CONTRACTOR SHALL POSSESS A VALID CLASS A LICENSE AT THE TIME THE CONTRACT IS AWARDED.

INDEX OF SHEETS

1. TITLE SHEET
2. SITE PLAN
3. GRADING PLAN
4. TYPICAL SECTION

STANDARD PLANS

THE FOLLOWING STATE OF CALIFORNIA DEPARTMENT OF TRANSPORTATION (CALTRANS) STANDARD PLANS, 2015 EDITION, APPLY:

A3A	ABBREVIATIONS (SHEET 1 OF 3)
A3B	ABBREVIATIONS (SHEET 2 OF 3)
A3C	ABBREVIATIONS (SHEET 3 OF 3)
A10A	LINES AND SYMBOLS (SHEET 1 OF 5)
A10B	LINES AND SYMBOLS (SHEET 2 OF 5)
A10C	LINES AND SYMBOLS (SHEET 3 OF 5)
A10D	LINES AND SYMBOLS (SHEET 4 OF 5)
A10E	LINES AND SYMBOLS (SHEET 5 OF 5)

LEGEND

AB – AGGREGATE BASE
CL – CLASS
CONT – CONTOUR
CP1 – TEMPORARY PROJECT CONTROL POINT
E – EASTING
ELEV – ELEVATION
EXIST – EXISTING
FG – FINISHED GRADE
FT – FOOT(FEET)
GEOTEXT – GEOTEXTILE
HEX – HEXAGONAL
LOL – LAYOUT LINE
MHW – MEAN HIGH WATER
MI – MILE(S)
MIN – MINIMUM
N – NORTHING
OG – ORIGINAL GRADE
STA – STATION
TBD – TO BE DETERMINED
TEMP – TEMPORARY
TYP – TYPICAL

× ELEVATION POINT

STRUCTURE BACKFILL

CLASS 2 AGGREGATE BASE

REGISTERED PROFESSIONAL ENGINEER DANIEL J. PELUSO No. Geo GE 2367 No. Civil C 49562 CIVIL-GEOTECHNICAL STATE OF CALIFORNIA

CE&G
CAL ENGINEERING & GEOLOGY
6455 Almaden Expwy.
Suite 100
San Jose, CA 95120
Phone: (408) 440-4542

SHEET PILE RETAINING WALL
POND A18 SOUTH GATE LEVEE REPAIR PROJECT
SAN JOSE, CALIFORNIA

TITLE SHEET

DESIGNED	DRAWN	CHECKED	PROJECT NO.	DATE	SHEET NO.	OF
E. VACCARO	E. VACCARO	D. PELUSO	170200	JULY 2017	1	4

M:\2017\170200 Hydroscience South Gate Repair\AutoCAD Files\Sheets\Title_sheet.dwg 7-31-17 04:30:04 PM evaccaro

NOTES:

1. 10 FT MAXIMUM SPACING, 7 TIE RODS TOTAL.
2. STEEL SHEET PILES NEAR 4 FT CONTOUR INSTALL DURING LOW TIDE.

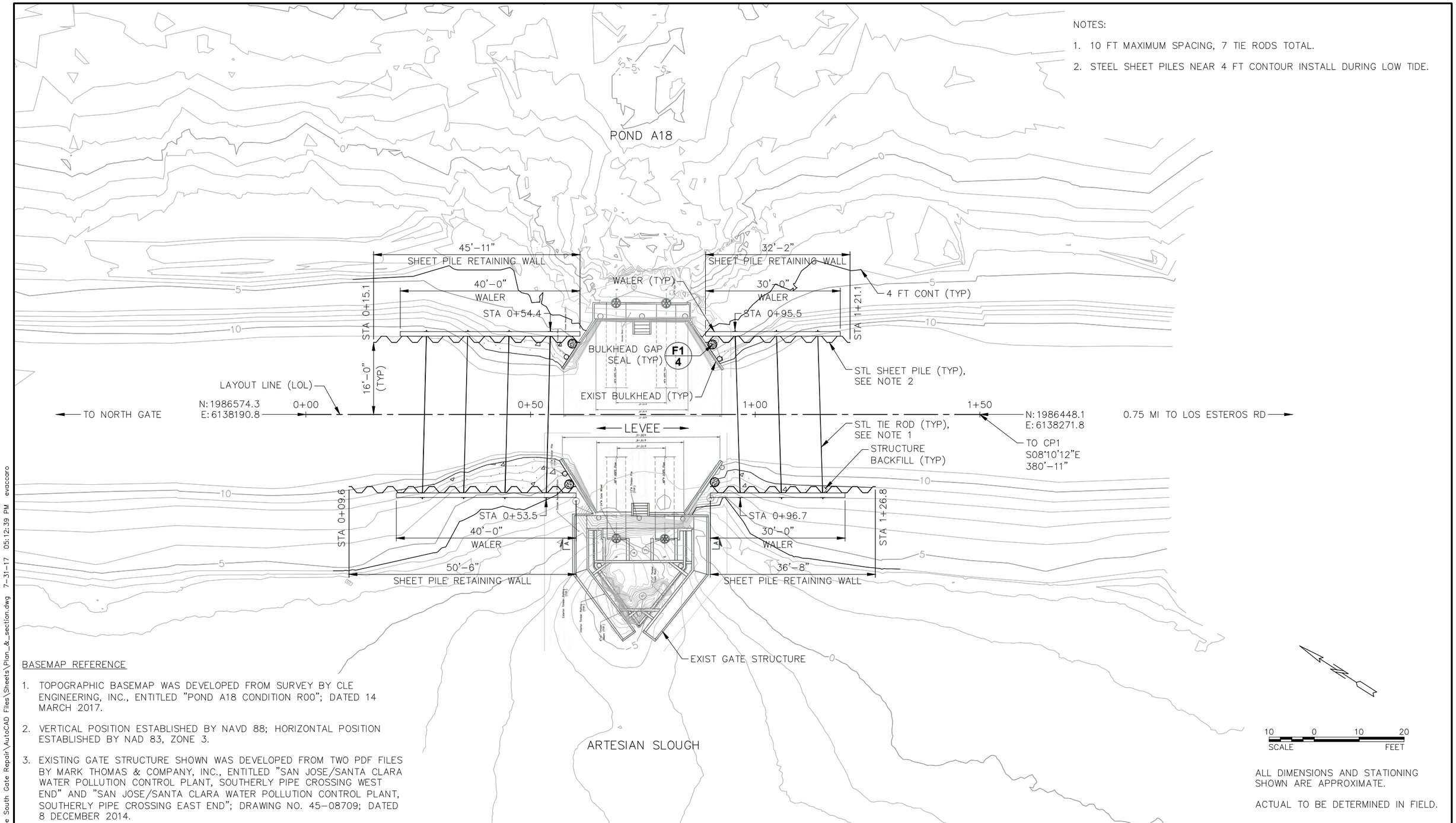

BASEMAP REFERENCE

1. TOPOGRAPHIC BASEMAP WAS DEVELOPED FROM SURVEY BY CLE ENGINEERING, INC., ENTITLED "POND A18 CONDITION R00"; DATED 14 MARCH 2017.
2. VERTICAL POSITION ESTABLISHED BY NAVD 88; HORIZONTAL POSITION ESTABLISHED BY NAD 83, ZONE 3.
3. EXISTING GATE STRUCTURE SHOWN WAS DEVELOPED FROM TWO PDF FILES BY MARK THOMAS & COMPANY, INC., ENTITLED "SAN JOSE/SANTA CLARA WATER POLLUTION CONTROL PLANT, SOUTHERLY PIPE CROSSING WEST END" AND "SAN JOSE/SANTA CLARA WATER POLLUTION CONTROL PLANT, SOUTHERLY PIPE CROSSING EAST END"; DRAWING NO. 45-08709; DATED 8 DECEMBER 2014.
4. PROJECT BENCHMARK IS TEMPORARY PROJECT CONTROL POINT (CP1) ELEVATION 10.70.
5. CP1 IS CENTER OF PLASTIC SURVEY MARKER ON REBAR AT GROUND LEVEL NEXT TO WITNESS POST (N:1986071.0, E:6138325.9).
6. WITNESS POST IS LOCATED APPROXIMATELY 3,200 FEET FROM ENTRANCE GATE AT LOS ESTEROS RD.

ALL DIMENSIONS AND STATIONING SHOWN ARE APPROXIMATE.

ACTUAL TO BE DETERMINED IN FIELD.

REGISTERED PROFESSIONAL ENGINEER DANIEL J. PELUSO No. Geo GE 2367 No. Civil C 49562 CIVIL-GEOTECHNICAL STATE OF CALIFORNIA

CE&G
CAL ENGINEERING & GEOLOGY
6455 Almaden Expwy.
Suite 100
San Jose, CA 95120
Phone: (408) 440-4542

SHEET PILE RETAINING WALL
POND A18 SOUTH GATE LEVEE REPAIR PROJECT
SAN JOSE, CALIFORNIA

SITE PLAN

DESIGNED	DRAWN	CHECKED	PROJECT NO.	DATE	SHEET NO.	OF
E. VACCARO	E. VACCARO	D. PELUSO	170200	JULY 2017	2	4

M:\2017\170200 Hydroscience South Gate Repair\AutoCAD Files\Sheets\Plan_&_section.dwg 7-31-17 05:12:39 PM evaccaro

NOTES:

1. TOP SURFACE, MAINTAIN EXISTING GRADE.

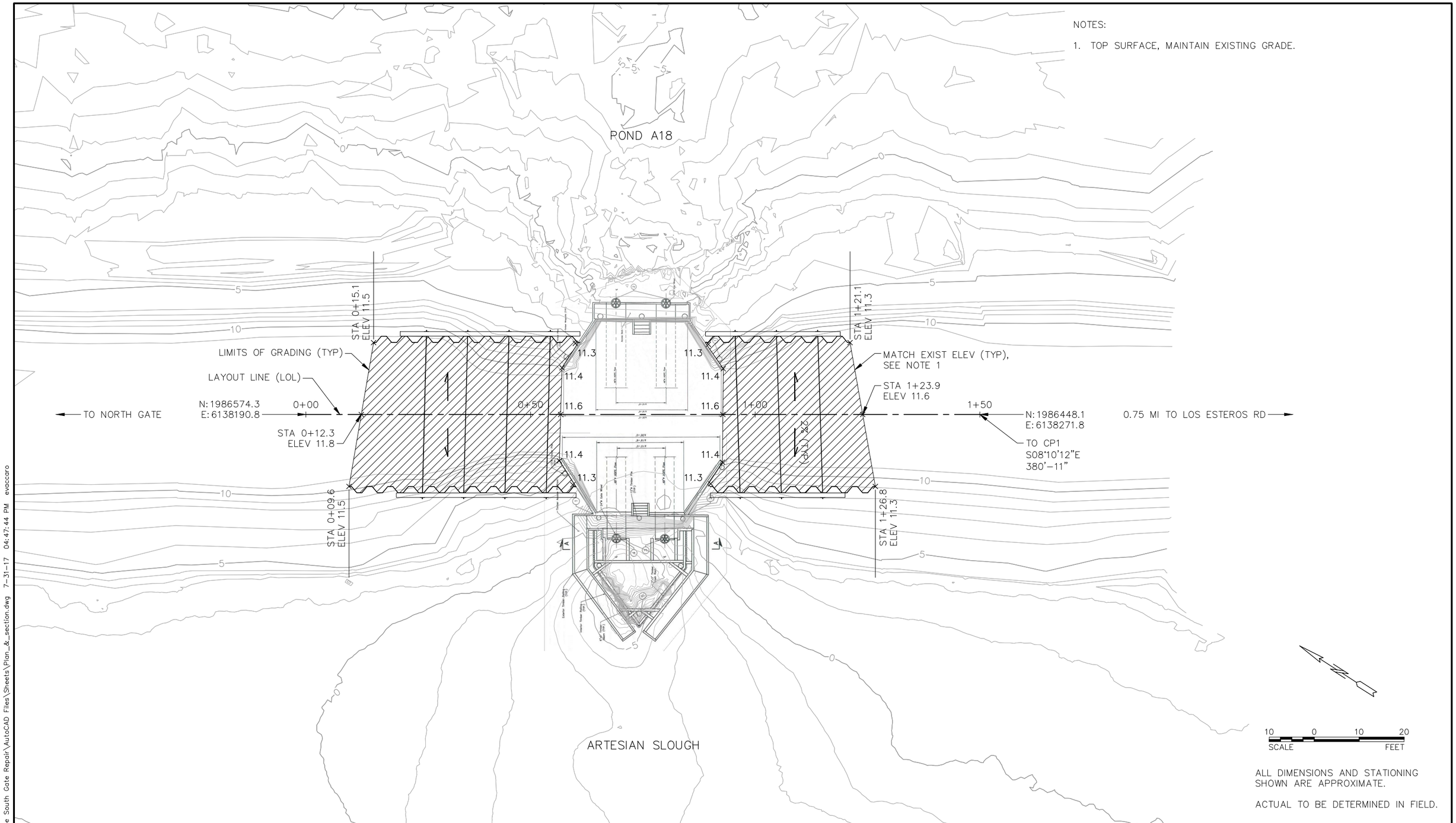

ALL DIMENSIONS AND STATIONING SHOWN ARE APPROXIMATE.

ACTUAL TO BE DETERMINED IN FIELD.

REGISTERED PROFESSIONAL ENGINEER
DANIEL J. PELUSO
No. Geo GE 2367
No. Civil C 49562
CIVIL-GEOTECHNICAL
STATE OF CALIFORNIA

CE&G
CAL ENGINEERING & GEOLOGY
6455 Almaden Expwy.
Suite 100
San Jose, CA 95120
Phone: (408) 440-4542

SHEET PILE RETAINING WALL
POND A18 SOUTH GATE LEVEE REPAIR PROJECT
SAN JOSE, CALIFORNIA

GRADING PLAN

DESIGNED	DRAWN	CHECKED	PROJECT NO.	DATE	SHEET NO.	OF
E. VACCARO	E. VACCARO	D. PELUSO	170200	JULY 2017	3	4

M:\2017\170200 Hydroscience South Gate Repair\AutoCAD Files\Sheets\Plan_&_section.dwg 7-31-17 04:47:44 PM evaccaro

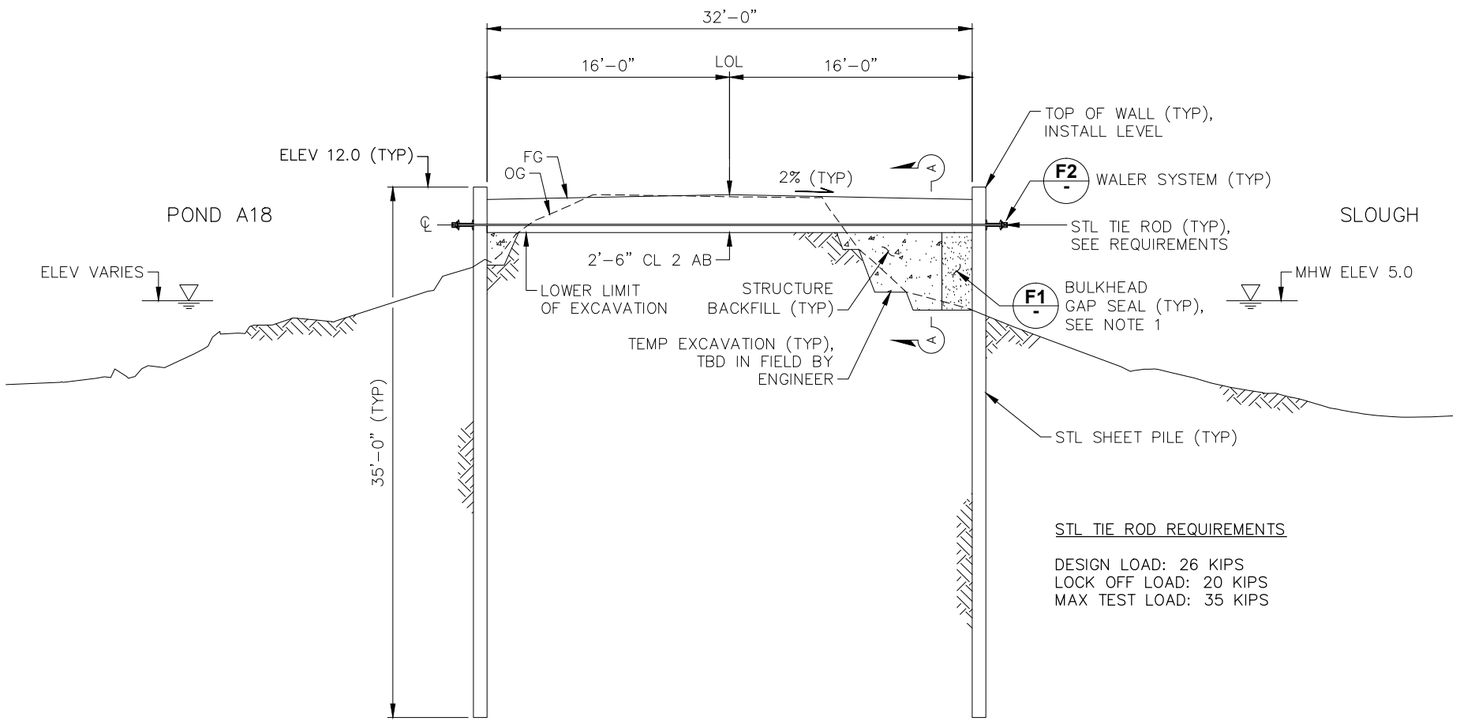

STL TIE ROD REQUIREMENTS

DESIGN LOAD: 26 KIPS
LOCK OFF LOAD: 20 KIPS
MAX TEST LOAD: 35 KIPS

TYPICAL SECTION

5 0 5 10
SCALE FEET

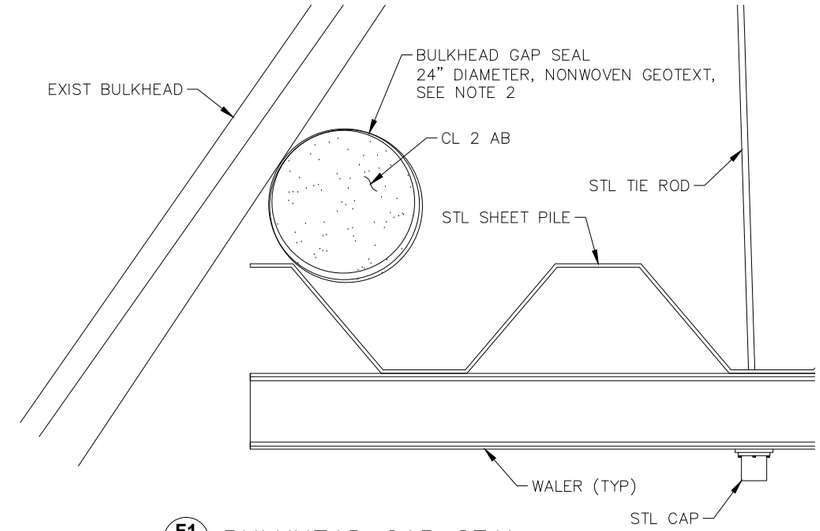

F1 BULKHEAD GAP SEAL

1 0 1 2
SCALE FEET

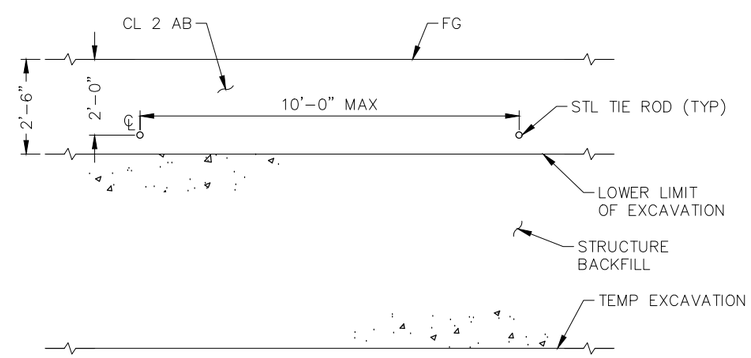

SECTION A

2 0 2 4
SCALE FEET

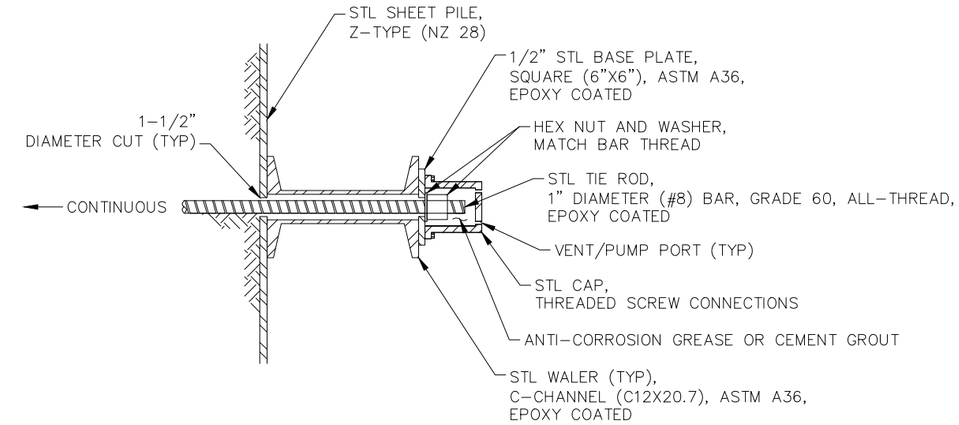

F2 WALER SYSTEM

0.5 0 0.5 1
SCALE FEET

NOTES:

1. BULKHEAD GAP SEAL SHALL BEGIN AT THE TEMPORARY EXCAVATION ELEVATION AND END AT THE LOWER LIMIT OF EXCAVATION ELEVATION, HEIGHT MAY VARY.
2. BULKHEAD GAP SEAL SHALL ABUT THE EXISTING BULKHEAD AND THE SHEET PILE RETAINING WALL SUCH THAT THE GAP BETWEEN WILL BE SEALED.
3. VIRGIN CLASS 2 AGGREGATE BASE CAN BE SUBSTITUTED FOR A SELECT IMPORT APPROVED BY THE CITY OF SAN JOSE.
4. WALER SYSTEM SHALL BE ASSEMBLED TO RESIST MINOR SHEET PILE DEFLECTION DUE TO EARTHWORK.
5. TEMPORARY SHORING TO INSTALL WALER SYSTEM SHALL BE DETERMINED BY CONTRACTOR.
6. LOCK OFF OF WALER SYSTEM SHALL TAKE PLACE ONCE EARTHWORK IS COMPLETE.

REGISTERED PROFESSIONAL ENGINEER DANIEL J. PELUSO No. Geo GE 2367 No. Civil C 49562 GEOTECHNICAL STATE OF CALIFORNIA

CE&G
CAL ENGINEERING & GEOLOGY
6455 Almaden Expwy.
Suite 100
San Jose, CA 95120
Phone: (408) 440-4542

SHEET PILE RETAINING WALL
POND A18 SOUTH GATE LEVEE REPAIR PROJECT
SAN JOSE, CALIFORNIA

TYPICAL SECTION

DESIGNED	DRAWN	CHECKED	PROJECT NO.	DATE	SHEET NO.	OF
E. VACCARO	E. VACCARO	D. PELUSO	170200	JULY 2017	4	4

M:\2017\170200 Hydroscience South Gate Repair\AutoCAD Files\Sheets\Plan_&_section.dwg 7-31-17 05:03:43 PM evaccaro