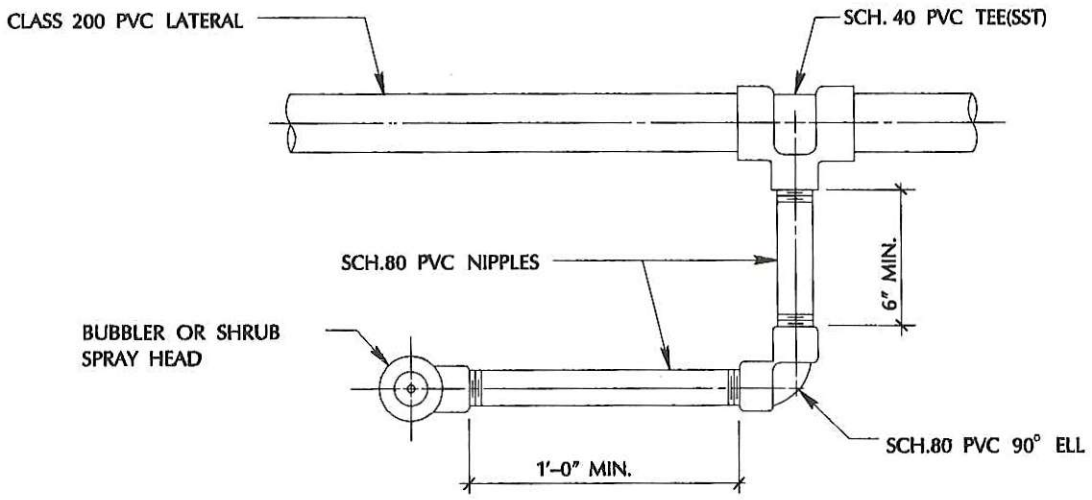

PLAN

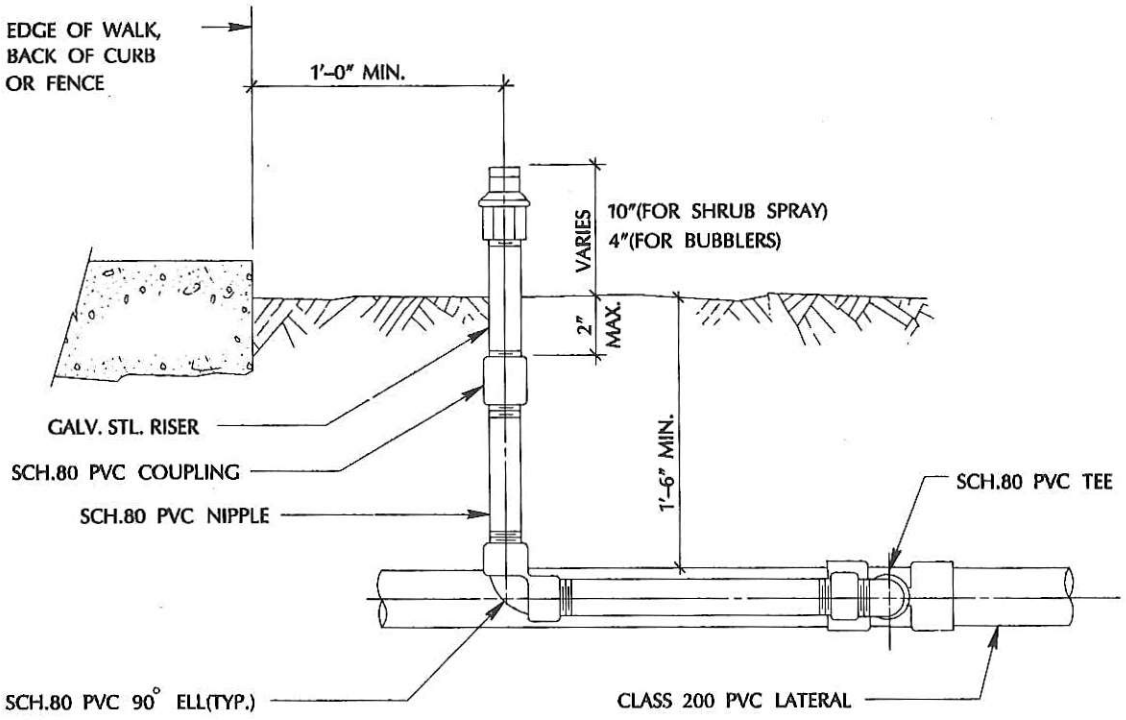

PROFILE

NOTES:

1. ALL ELEMENTS OF SWING JOINTS SHALL BE AS SHOWN AND OF THE SAME DIAMETER AS THE BASE OF HEAD BEING USED.
2. ALL GALVANIZED CONNECTIONS SHALL BE COATED WITH PIPE JOINT COMPOUND. ALL EXPOSED THREAD AREAS SHALL BE HEAVILY COATED WITH COMPOUND. TEFLON TAPE SHALL NOT BE ACCEPTABLE.
3. STREET ELLS SHALL NOT BE ACCEPTABLE.

APPROVED BY	BUBBLERS AND SHRUB SPRAY HEADS		DRAWING NO.
DATE 4/3/92	(FOR MEDIANS & BACK-UPS ONLY)	CITY OF SAN JOSE CALIFORNIA	L-5
	DEPARTMENT OF PUBLIC WORKS		