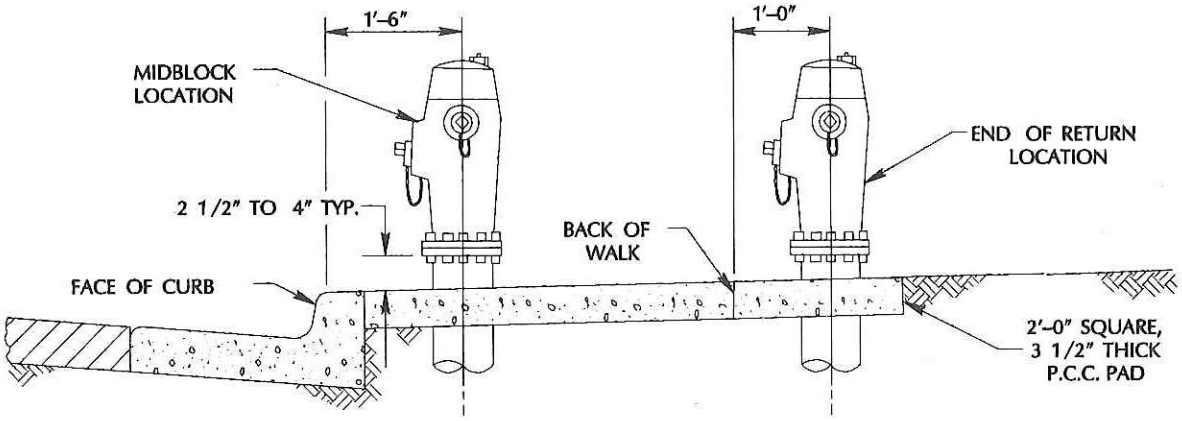

4'-6" ATTACHED RESIDENTIAL SIDEWALK

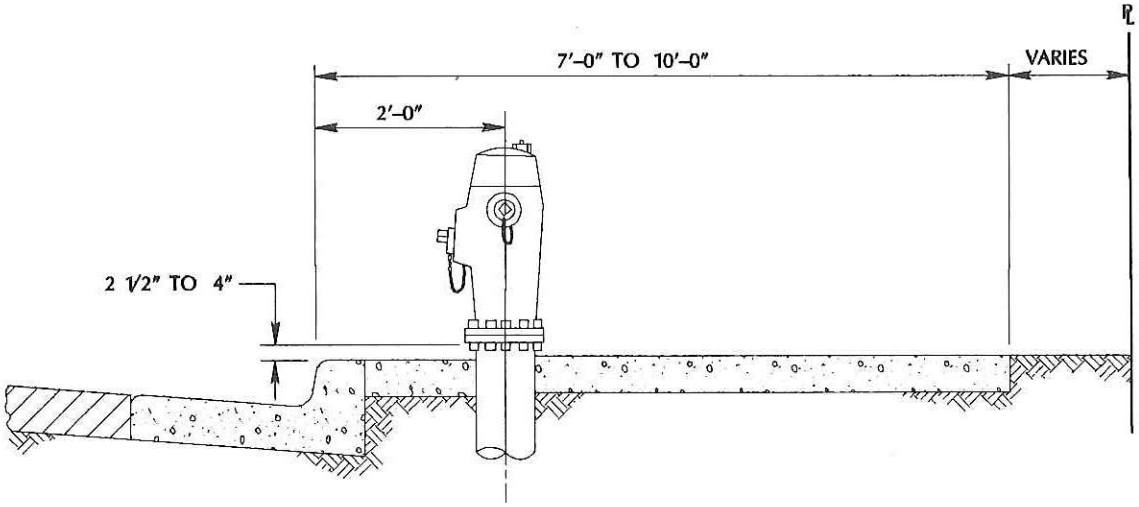

WIDE ATTACHED SIDEWALKS

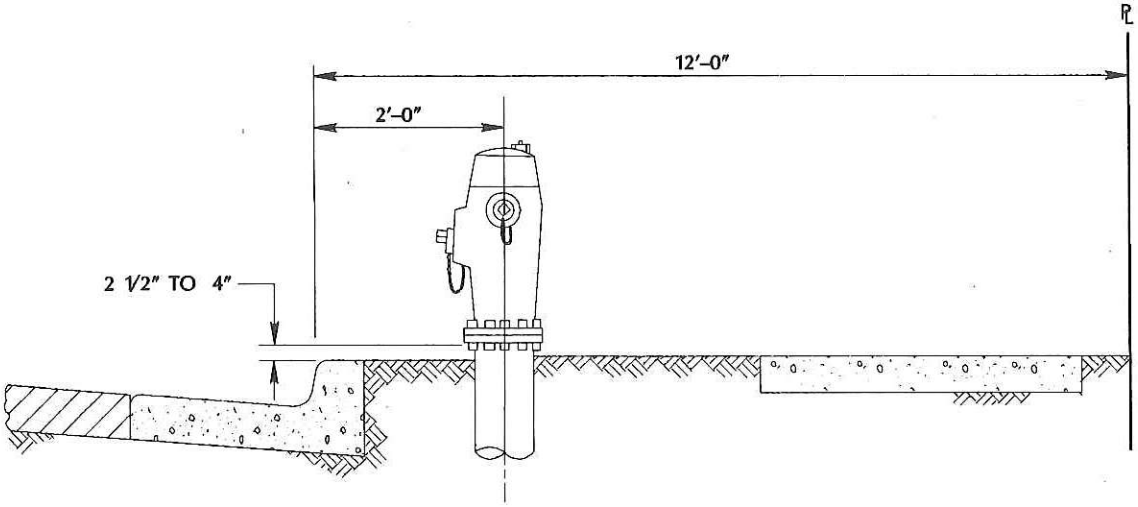

DETACHED SIDEWALK

APPROVED BY	FIRE HYDRANT LOCATIONS		DRAWING NO.
DATE 4/10/92	DEPARTMENT OF PUBLIC WORKS	CITY OF SAN JOSE CALIFORNIA	R-13